Atlantic Coastal Supply Inc.

Phone: 1-800-520-0556
Fax: 1-800-204-5630
Email: sales@atlanticcoastalsupply.com

TENTH EDITION

We Stock Over 15,000 items.
If You Don't See It, Please Call And Ask.

WE ARE SET UP TO CROSS REFERENCE AND RESEARCH ANY MANUFACTURER OR DISTRIBUTOR PART NUMBER. THIS ENABLES US TO SUPPLY ANY PLUMBING, HEATING, OR INDUSTRIAL SPECIALTY ITEM YOU REQUIRE. THANK YOU!!

WE ACCEPT ALL MAJOR CREDIT CARDS

This Catalog May Not Be Reproduced In Whole Or Part Without Written Consent From Atlantic Coastal Supply Inc.

Bathware & Related Items 1

Faucet Repair Parts, Aaerators, Handles, Stems, etc. 2

Faucets & Complete Fixtures (Residential & Commercial) 3

Flush Valves, Bedpan Washers, Repair Parts 4

Common Repair Parts: Plumbing, Electrical, Appliances 5

Tools, Chemicals, Caulk, Drill Bits 6

Toilet/Urinal Repairs 7

Supply & Waste 8

Hardware: Fasteners, Door, Window, Drapery, etc. 9

Repair Parts by Manufacturer 10

Heating 11

Bubblers/Hydrants & Related Repair Parts 12

SECTION ONE BATHWARE & RELATED ITEMS

CHROME PLATED SOAP DISH WITH EXPOSED SCREWS

500070

CHROME PLATED SOAP DISH

500415

CHROME PLATED TUMBLER HOLDER WITH EXPOSED SCREWS

500075

CHROME PLATED TUMBLER HOLDER WITH CONCEALED SCREWS

500410

TISSUE ROLLER WITH CONCEALED SCREWS CHROME PLATED WITH CHROME PLATED PVC TISSUE ROLLER

500405

TOILET TISSUE ROLLER ONLY

500065 -Standard White PVC Fits Most
500420 -"Fit All" White PVC Step Down Type
500064 -CP Plastic Fits Most
500421 -CP Metal (FRB)

BOBRICK TISSUE ROLLER, HEAVY DUTY CAST ALUMINUM WITH CONCEALED LOCKING DEVICE, WITHOUT CONTROLLED DELIVERY

500185 - Double
500325 - Single

SINGLE ROLL TISSUE HOLDER (ECONOMY)

400230

DOUBLE TISSUE HOLDER (ECONOMY)

100430

RECESSED EXTRA ROLL PAPER HOLDER (INCLUDES MOUNTING HARDWARE) (WALL OPENING 5-1/4" x 5-1/4" x 3-7/8")

500573- Taymor/Generic

RECESSED PAPER HOLDER 2" DEPTH WITH MOUNTING HARDWARE (WALL OPENING 5-1/4" x 5-1/4")

940296- Taymor/Generic

VANDAL RESISTANT TOILET TISSUE HOLDER SAVE HALF

001021

500060 - Single Tissue Holder With Exposed Screwes, CP Die Cast With White Plastic Roller
500065- Roller Only

TOILET TISSUE DISPENSERS CHROME PLATED METAL WITH DELIVERY CONTROL

100440 - Single Roll (Delux)

100445 - Double Roll With Easy Push Button Release (Delux)

TOWEL BAR POSTS (PAIR) SQUARE BASE

500017 - 3/4" Concealed, Generic
940425 - 3/4" Concealed, Franklin Brass

TOWEL BAR POSTS (PAIR) LONG NARROW BASE

500080 - 5/8" Direct Screw, Generic
500095 - 3/4" Direct Screw, Generic

TOWEL BARS

500089 - 3/4" x 18" Polished Aluminim
940110 - 3/4" x 18" Stainless Steel
940111 - 3/4" x 24" Stainless Steel
500090 - 3/4" x 24" Polished Aluminim
500003 - 3/4" x 36" Polished Aluminim
500385 - 5/8" x 18" Polished Aluminim
500085 - 5/8" x 24" Polished Aluminim
500570 - 5/8" x 30" Polished Aluminim

SHOWER ROD HOLDERS CHROME PLATED (ADJUSTABLE)

500100 - Complete Die Cast Holder
500554 - Replacement Pad Only

SHOWER RODS (ROD ONLY, DOES NOT INCLUDE ENDS)

500005 - Standard 5" Polished Aluminum

SHOWER ROD FLANGES FOR 1" DIAMETER RODS (SOLD BY THE PAIR)

500360 - Direct Screw, CP, Generic - Stamped (Most Common)

TUB SAFETY STRIPS 3/4" X 18" WHITE (8 STRIPS PER PACK)

940817

SAFETY BATHMATS

940017 - 16" x 34" White
940020 - 17" x 38" White

BOBRICK SURFACE MOUNTED SANITARY NAPKIN DISPOSAL 10” HIGH x 7-1/2” WIDE x 3-3/4” DEEP **500425**	CONTINENTAL PAPER TOWEL DISPENSER C FOLD AND MULTI FOLD (WITH LOCK AND KEY) **948016**	BOBRICK SURFACE MOUNT PAPER TOWEL DISPENSER 10-3/4” WIDE x 14” HIGH x 4” DEEP **500180**
BOBRICK SURFACE MOUNT PAPER TOWEL DISPENSER 10-3/4” WIDE x 7-1/8” HIGH x 4” DEEP **500430**	SMARTDRI HAND DRYER ALUMINUM WITH WHITE FINISH **602929**	

AMERICAN SPECIALTIES
(OLD AMERICAN DISPENSERS)
BLACK PVC WITH C.P. METAL END PIECES - LENGTH 5-3/8”

500572

GRAY PVC, AMERICAN SPECIALTIES
LENGTH 6-1/4”

500571

500065 - WHITE PVC
500064 - CHROME PLATED PVC
500421 - CHROME PLATED METAL, FRANKLIN BRASS - LENGTH 6”

BOBRICK, BLACK PVC - LENGTH 6-1/8”

500190
804699 - Replacement Key Only

WHITE PVC FIT-ALL “STEP DOWN” ENDS
LENGTH 6”

500420

BOBRICK, AFTER 1972, BLACK PVC
LENGTH 5-11/16”

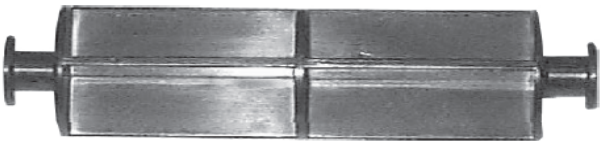

500335

BRADLEY, MILKY WHITE PVC
LENGTH 5-3/8”

500592

GREY PVC ROLLER
LENGTH 6-1/2”

500499

BOBRICK, ALL WHITE PVC
LENGTH 5-1/8”

500191

BOBRICK, ADJUSTABLE FROM 5-3/8” TO 6”.
VANDAL PROOF WITH KEY TO UNLOCK

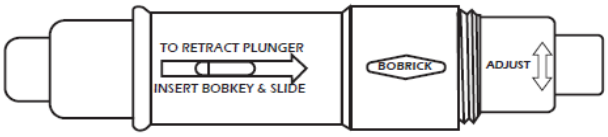

500925

LIQUID SOAP DISPENSER (COMPLETE UNIT) BRASS PUMP AND HEAD EASY REFILL TANK **402950**	BRADLEY LIQUID SOAP DISPENSER **501350**	CONTINENTAL HORIZONTAL SOAP DISPENSER 40oz LIQUID. STAINLESS STEEL **940535**
VERTICAL SOAP DISPENSER 40oz LATHER SOAP STAINLESS STEEL **940540** - Continental **940544** - Bobrick	CONTINENTAL VERTICAL SOAP DISPENSER 27oz LIQUID SOAP WHITE PLASTIC **948015**	ASI LAVATORY MOUNTED ALL PURPOSE SOAP DISPENSER WITH 20oz CAPACITY **949000** - 4” Spout **804453** - 6” Spout
BOBRICK SOAP DISPENSER 4” SPOUT 1” MAX MOUNTING THICKNESS W/6” 20oz BOTTLE SHOWN **500310**	BOBRICK SOAP DISPENSER TWO TONE BLACK AND GREY WITH PUSH IN VALVE (40oz) 5-3/16” WIDE x 6-7/8” HIGH **500315**	

SHOWER WATER DAM

505130 - 5' Water Dam
505131 - 6' Water Dam
505132 - Water Dam Replacement Strip (Sold by Foot)

CELL MIRRORS STAINLESS STEEL

102225 - 9 1/2"W x 11 1/4"H
008174 - 11 1/4"W x 17 1/4"H

HEAVY DUTY STAINLESS STEEL GRAB BARS

942103 - 1 1/2" x 12" Standard Bar
942102 - 1 1/2" x 18" Standard Bar
942100 - 1 1/2" x 24" Standard Bar
940680 - 1 1/2" x 36" Standard Bar
942156 - 1 1/2" x 48" Standard Bar
940681 - 1 1/4" x 36" Standard Bar

SUICIDE RESISTANT GRAB BARS

008172 - 24"
008175 - 36"
008176 - 42"

BALL CLOTHES HOOK

808533 - 4 Ball Hook Strip (18"W x 5 1/2"H x 2 7/16"D)
808534 - 4 Ball Hook Strip w/Shelf (18"W x 12"H x 9"D)

SINGLE BALL CLOTHES HOOK

808535

TOWEL HOOKS

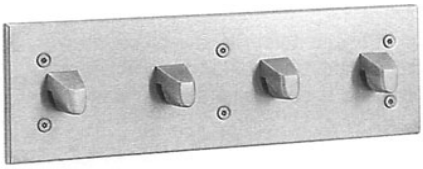

808536 - Chase Mount 4 Strip Hook (18"L x 5 1/2"H)
808534 - Front Mount 4 Strip Hook (18"L x 5 1/2"H)
808538 - Front Mount 4 Strip Hook w/ Shelf (118"W x 12"H x 9"D)

TOWEL HOOK

808539 - Chase Mount 5 1/2"L x 5 1/2"H
808540 - Front Mount 5 1/2"L x 5 1/2"H

TOILET PAPER HOLDER

808541 - Chase Mount 6 1/2" L x 6 1/2" H

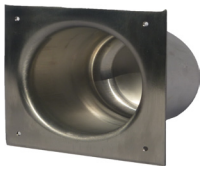

808543 - Front Mount 7"L x 7"H

SOAP DISH

808544 -Chase Mount 7"L x 5"W
808545 -Chase Mount 5"L x 2 1/2"W
808546 -Front Mount 5"L x 2 1/4"W

HANDI LAV GUARD

940640 - Complete Kit W/Tailpiece Cover P-Trap Cover and Stop Covers (White)
940645 - White Elbow Only

UNDERSINK PROTECTIVE ENCLOSURE

000820

HANDICAP TOILET SEAT BAR
1" DIAMETER
(BOLTS UNDER SEAT HINGES)

500422

SHOWER SEAT (ADA) (15" x 19 3/4")

204197

HEAVY DUTY FOLDING SHOWER SEAT (ADA)

504770

WHEN FOLDED 18" WIDE, 3-1/2" DEEP
MAX WALL PROJECTION 15"
WHITE PHENOLIC 1/2" THICK x 3" WIDE SLATS BOLTED TO FRAME WITH COUNTERSUNK STAINLESS STEEL SCREWS AND CAP NUTS
FRAME IS TYPE 304(18-8) STAINLESS STEEL TUBING: 1-1/4" DIAMETER, 18 GAUGE
WALL FLANGES ARE TYPE 304(18-8) STAINLESS STEEL: 3" DIAMETER, 10 GAUGE
SUPPORT LEG IS U-SHAPPED YOKE OF TYPE 304(18-8) STAINLESS STEEL: 1" DIAMETER, 18 GAUGE
GUIDE BRACKET IS OF TYPE 304(18-8) STAINLESS STEEL: 3" WIDE, 18 GAUGE WITH POSITIVE STOP FOR RAISED POSITION

SECTION TWO
RESIDENTIAL FAUCET REPAIR PARTS
AERATORS, HANDLES, SEATS, STEMS, AND MISCELLANEOUS SMALL PARTS

ACS MASTER O-RING KIT

804218
ACS O-RING MASTER KIT
450 PIECES OF THE 46
MOST COMMONLY
USED O-RINGS
805634
383 PIECES OF THE
MOST COMMONLY
USED O-RINGS. NOW
COMES IN NEW
CLEAR PLASTIC CASE

SEAT KIT

805906
CONTAINS 30 SIZES
150 TOTAL PIECES
BARRELS WITH THREAD
GAUGE WITH
PLASTIC CARRYING CASE

ACS O-RING KIT

800080
SMALL ASSORTED
O-RING KIT
14 SIZES, 200 PIECES

CAP THREAD & TOP BIB GASKET ASSORTMENT

800840
CONTAINS 15 DIFFERENT
GASKETS, 200 TOTAL
PIECES

STEM PACKING ASSORTMENT

800021
CONTAINS 33 SIZES
300 TOTAL PIECES

WASHER RETAINER KIT

801001
120 PIECES
3 BIBB SCREW SIZES
9 RETAINER SIZES
ALL BRASS

ACS WASHER KITS

800084
144 TEFLON WASHERS,
ASSORTED SIZES
800087
200 FLAT WASHERS,
ASSORTED SIZES
800086
200 FLAT/BEVELED
COMBO WASHERS
ASSORTED POPULAR
SIZES

SCREW KITS

800020
HANDLE SCREWS, CP
BRASS, 150 PIECES, 12
POPULAR SIZES
805760
BRASS BIBB SCREWS,
10 POPULAR SIZES, 300
PIECES
800025
MONEL SCREWS 12 POPU-
LAR SIZES, 220 PIECES

MOEN HANDLE INSERT

808921 - HOT
808922 - COLD

"FIT-ALL" HANDLE INSERTS
(PAIR)

800540

SPEAKMAN INSERT FOR SPEAKMAN SINGLE LEVER TUB HANDLES (WITH ALLEN SET SCREW)

808084

SPEAKMAN HANDLE INSERT

807265

EXTRA LONG HANDLE SCREWS FOR USE WITH BRASS/CELCON HANDLE INSERTS & "FIT ALL" METAL HANDLES

804660 - 3/4" x 8-32
804650 - 3/4" x 10-24
804655 - 7/8" x 10-32
900058 - 1" x 10-24

ADDITIONAL HANDLE SCREWS

OVAL HEAD

TRUSS HEAD

803510 - 10-24 x 2-18" OVAL HEAD
809201 - 10-24 x 2" OVAL HEAD
404657 - 10-24 x 1-3/8" OVAL HEAD
802075 - 10-24 x 3/4" OVAL HEAD
806123 - 10-24 x 5/8" TRUSS HEAD
802076 - 10-32 x 7/8" OVAL HEAD
806201 - 8-32 x 2-18" TRUSS HEAD
801462 - 8-32 x 1" TRUSS HEAD
801466 - 8-32 x 7/8" OVAL HEAD
802077 - 8-32 x 3/4" OVAL HEAD
802225 - 8-32 x 7/16" TRUSS HEAD

2

TEFLON FAUCET WASHERS WITH MEMORY

801360 - OO FLAT
801361 - O FLAT
801363 - 1/4 FLAT
805072 - 1/4L FLAT
805073 - 3/8 FLAT
805074 - 3/8M FLAT
801362 - 3/8L FLAT

AMERICAN STANDARD AQUASEAL WASHER

800125
LARGE - MOST COMMON

803350
SMALL

CRANE DIALESE WASHERS

800060 - MEDIUM SOFT NEOPRENE
801070 - MEDIUM HARD NEOPRENE
001065 - HARD BROWN FIBER

CHICAGO FAUCET WASHER

805931 - SOFT, BLACK
801940 - MEDIUM, YELLOW
801984 - MEDIUM, BLACK
805932 - SEMI-SOFT, BLACK - (TWICE AS HARD AS **805931**)

ZURN RED SEAT WASHER

920143-
Soft Red Silicone

PRICE PFISTER RUBBER SNAP-IN WASHER

800136

HANDLE SCREWS- CHROME PLATED BRASS

PLASTIC KIT BOX ONLY 12 COMPARTMENTS

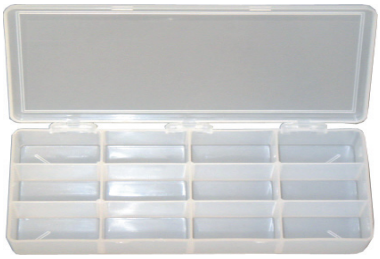

941009

BIBB SCREWS

MONEL (Self Locking)

801500 - 3/8 x 6/32
801502 - 3/8 x 10-24
801504 - 3/8 x 10-28
801507 - 3/8 x 10-32
801125 - 3/8 x 8-32
801506 - 1/2 x 8-32
801501 - 1/2 x 6-32
801509 - 1/2 x 10-28
801503 - 1/2 x 10-24
801508 - 1/2 x 10-32

BRASS

805749 - 1/4 x 8-32
805754 - 3/8 x 10-28
805758 - 3/8 x 6-32
805751 - 3/8 x 10-24
805753 - 3/8 x 8-32
805756 - 3/8 x 10-32
805752 - 1/2 x 10-24
805750 - 1/2 x 8-32
805755 - 1/2 x 10-28
805757 - 1/2 x 10-32
805758 - 3/8 x 6-32

RUBBER AND DUCK SQUARE CUT PACKING

406994 -15/16 DUAL THREAD AERATOR WITH WIRE SCREEN IN BOTTOM OUTLET. 2.2 GPM FLOW RATE
407185 -15/16 DUAL THREAD NEOPERL 2.2 GPM WITH RED SCREEN ON INLET SIDE OF AERATOR.

400185 - 15/16 DUAL THREAD WITH PLASTIC FLOW OUTLET IN BOTTOM. FLOW RATE IS 2.2 GPM

400510 - 13/16 THREAD MALE AERATOR. WITH WIRE SCREEN IN BOTTOM OUTLET. 2.0 GPM FLOW RATE.

400515 - 3/4" FEMALE THREAD (27 THREAD) SMALL AERATOR WITH WIRE SCREEN IN BOTTOM OUTLET 2.2 GPM

404440 - 15/16 DUAL THREAD SLOTTED AERATOR SPRING FLOW. FLOW RATE IS 2.5 GPM

402050 - 15/16 FEMALE THREAD AERATOR WITH WIRE SCREEN IN BOTTOM OUTLET. 2.2 GPM FLOW RATE

408234 - 15/16 DUAL THREAD AERATOR. VANDAL PROOF WITH KEY. WIRE SCREEN IN BOTTOM OUTLET. FLOW RATE IS 2.2 GPM LOW FLOW.

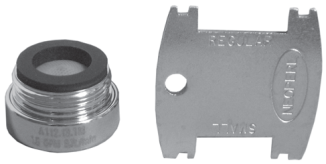

804789 - 13/16 MALE THREAD SMALL VANDAL PROOF AERATOR. WITH WIRE SCREEN BOTTOM OUTLET. FLOW RATE IS 2.2 GPM

801002 - 15/16 DUAL THREAD VANDAL PROOF WATER SAVER AERATOR WITH KEY. WIRE SCREEN IN BOTTOM OUTLET FLOW RATE IS 1.5 GPM

804787 - 15/16 MALE THREAD VANDAL PROOF AERATOR WITH KEY. WIRE SCREEN BOTTOM OUTLET. FLOW RATE IS 1.5 GPM.

804786 - VANDAL PROOF KEY

804788 - 15/16 FEMALE THREAD VANDAL PROOF AERATOR WITH KEY. WITH WIRE SCREEN BOTTOM OUTLET. FLOW RATE IS 1.5 GPM	**408233** - 13/16 MALE THREAD SMALL SLOTTED AERATOR FLOW RATE IS 2.5 GMP
805070 - 15/16 FEMALE THREAD T&S FLOW CONTROL AERATOR. FLOW RATE IS 2.5 GPM WITH UP TO 7 DIFFERENT FLOW RATES.	**406996** - 15/16 FEMALE AERATOR WITH 3/8" MIP ADAPTOR T&S
401778 - 13/16 x 24 TPI FEMALE AERATOR FOR CHICAGO SPOUT	

942566 - 1.5 GPM WATER SAVER SHOWER HEAD ADAPTER

942563 - .5 GPM 13/16" MALE AERATOR

942562 - .5 GPM 15/16" DUAL THREAD AERATOR

804789 - 1.5 GPM VANDAL PROOF CONSERVERATOR 13/16 MALE WITH KEY

408234 - 2.2 GPM DUAL THREAD VANDAL PROOF AERATOR, 15/16 WITH KEY

942565 - .5 GPM 15/16" MALE AERATOR VANDAL PROOF WITH KEY

942584 - (50 PACK) .5 GPM FLOW INSERT ONLY
942577 - (SINGLE) .5GPM FLOW INSERT ONLY

407496 - 13/16" NEOPERL AERATOR REPLACEMENT WASHER
407497 - 15/16" NEOPERL AERATOR REPLACEMENT WASHER

400917 - SNAP FITTING - LARGE WITH AERATOR AND 15/16" MALE x 15/16" FEMALE PVC ADAPTOR FOR SPOUT.

400916 - SNAP FITTING - SMALL. 15/16" DUAL THREAD WITH FLOW SCREEN

400918 - SNAP CONNECTOR COUPLING - LARGE. WITH 3/4" GARDEN HOSE THREADS USED FOR QUICK CONNECTIONS

400915 - SNAP CONNECTOR COUPLING - SMALL. WITH 3/4" GARDEN HOSE THREADS USED FOR QUICK CONNECTIONS.

DEMA/LIQUID PROPORTIONERS
FAUCET MOUNTED MODELS WITH 8' CLEAR TUBING

408254 - MODEL 154 USES METERING SCREW ADJUSTMENT TO DETERMINE DILUTION RATIOS

408253 - MODEL 167 USES SLIDE VALVE WHICH STAYS IN "SOAP" OR "CLEAR" POSITION UNTIL SHIFTED

404710 - MALE FAUCET ADAPTER 15/16" x 27 THD
402755 - PVC

805531 - T&S SPOUT ADAPTOR WITH WASHER. 3/8" x 18 THREAD IPS SPOUT ADAPTOR WITH 15/16" MALE AERATOR THREADS ON BOTTOM
406997 - GENERIC

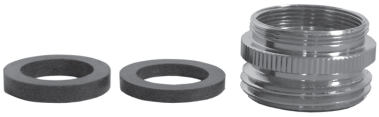

GARDEN HOSE ADAPTOR. AERATOR THREAD x GARDEN HOSE THREAD CHROME PLATED
801050 - 15/16" DUAL THREAD x MHT
402750 - 13/16" MALE THREAD x MHT

404715 - FEMALE ADAPTOR FOR CHICAGO FAUCET MALE SPOUTS (13/16" - 24THD) TO ADAPT TO 15/16" FEMALE AERATOR

801451 - OEM KOHLER ADAPTER 1/2" FIP x 15/16" MALE AERATOR
400953 - GENERIC. WITH HEX FOR WRENCH

801459 - KOHLER OEM 3/8" FIP x 13/16" FEMALE AERATOR

408232 - SPEAKMAN ADAPTOR FOR HOSPITAL SPOUT. 13/16" MALE x 15/16 MALE. FITS INSIDE OF SPOUT

805824 - AMERICAN STANDARD ADAPTOR. 3/8" FIP x 55/64 F

400955 - MALE ADAPTOR FOR ELJER. 5/8" x 24 FEMALE SPOUT. BOTTOM HAS 15/16" MALE AERATOR THD

400956 - FOR KOHLER AND PRICE PFISTER. FEMALE ADAPTOR 3/4" x 27 THD x 15/16" MALE AERATOR ON BOTTOM

400955 - HOSE ADAPTOR. 15/16" DUAL THREAD AERATOR ON TOP WITH MALE HOSE THREAD ON BOTTOM, ALONG WITH 55/64" x 27 MALE AERATOR THREAD

400953 - 1/2" FIP x 15/16" MALE AERATOR FOR KOHLER

402750 - HOSE ADAPTOR: 13/16" MALE THREAD AERATOR ON TOP WITH MALE HOSE THREAD ON BOTTOM

400954 - FEMALE ADAPTOR 3/8" TAPERED PIPE x 15/16" MALE THREAD ON BOTTOM

400920 - MALE ADAPTOR. TOP THREAD IS 13/16" MALE AERATOR, BOTTOM THREAD FITS INSIDE D.T. AERATOR

804710 - T&S ROSESPRAY OUTLET WITH 3/8- 18 NPT MALE THREADS

801865 - T&S HOSE COCK 3/8" MIP THREAD WITH GAS/AIR/VAC INDEX.

803705 - T&S SERRATED NOZZLE WITH GASKET 3/8" MIP THREAD

FAUCET HOLE COVER

001466

Outlet heads are mounted 3” apart deliver a soft, aerated flow of water. Heads angle forward toward user. Angle of heads is adjustable to permit full coverage and avoid splashing. Furnished with float off dust covers to protect outlet heads.

FAUCET HOLE COVER

003187

Outlet heads are mounted 5” apart deliver a soft, aerated flow of water. Heads angle forward and inward toward user. Angle of heads is adjustable to permit full coverage and avoid splashing. Furnished with float off dust covers to protect outlet heads.

SPRAY HEAD AND HOSE

400145 - RINSE-QUIK
400141 - DELTA WITH TWO BRASS ADAPTORS

RINSE-QUIK SPRAY HEAD

400140 - OEM RINSE-QUIK
400142 - BLACK
402204 - WHITE

SPRAY HEAD OUTLET

804710 - SPRAY HEAD OUTLET.
3/8” IPS MALE INLET.
1-1/4” DIAMETER.
ALL BRASS, CHROME PLATED. APPOX. 7/8” LONG

ACS MASTER AERATOR ADAPTOR KIT

404450 -
40 MOST COMMONLY USED ADAPTORS WITH REQUIRED WASHERS
LID HAS REFILL CHART FOR EASY REPLACEMENT

FAUCET SHANK EXTENSION KIT

408147

1/2” FAUCET SHANK COUPLING NUT, BRASS **401168**	FAUCET LOCK NUT **400115** - PLASTIC **401193** - BRASS	FAUCET STABILIZER SHANK WASHER 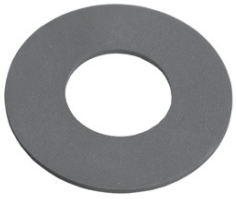 1/16” Thick, 15/16” ID, 2” OD. Prevents Faucets From Becoming Loose in Mounting **805056**	1/2” FAUCET SHANK COUPLING NUT, PLASTIC **400120**
FAUCET HOLE COVER **400135** - 1-3/4” POLISHED STAINLESS STEEL **401513** - 2” CHROME PLATED	FAUCET HOLE COVER CHROME PLATED SNAP-IN TYPE 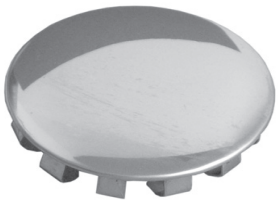 **805042**	HOSE GUIDE FOR KITCHEN FAUCET **400150**	90 DEGREE FAUCET SUPPLY KIT 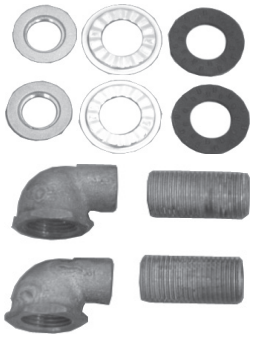 **401570**
FLAT BASIN ROSETTE **400110**	DEEP BASIN STEEL ROSETTE **400105** - 1-7/8” OD. 7/8” ID, 5/8” HEIGHT	KOHLER ROUND DEEP ROSETTE **803215** - 2” OD, 15/16” ID 1-1/4” HEIGHT	UNION BRASS KITCHEN FAUCET DIVERTER **809784**
DELTA KITCHEN FAUCET DIVERTER **804876** - BRASS **804875** - PVC **807763** - OEM	KOHLER KITCHEN FAUCET DIVERTER 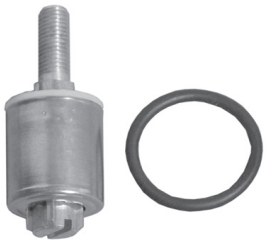 **809664**	GERBER KITCHEN FAUCET DIVERTER **808147**	DELTA KITCHEN FAUCET DIVERTER **808093**

3-1/2" VALVE UNIT	CONTROL ASSEMBLY (LONG) 6"	CONTROL ASSEMBLY (SHORT) 4-3/4"	VALVE HANDLE
002907 - HOT VALVE UNIT **000819** - COLD VALVE UNIT	**805731** - HOT **805732** - COLD	**805734** - HOT **805735** - COLD	**807024**
RH ACORN STEM 6-1/8"	RH ACORN STEM 3-3/8"	VALVE STEM UNIT 2-5/8"	METERING CARTRIDGE VALVE STEM UNIT 3-3/8"
804978 -HOT/COLD	**805100** -HOT/COLD	**807702**	**807645** -Less Push Button **807596** -w/ Push Button **807645G** - Less Push Button (Generic)
PENAL-TROL STOP UNIT 1-7/8"	QUICK CLOSE CARTRIDGE 2-1/2"	ACORN AIR CONTROLLED PUSH BUTTON VALVE	
803785	**809167** -OEM Acorn **803780** -Generic **942650** - Repair Kit	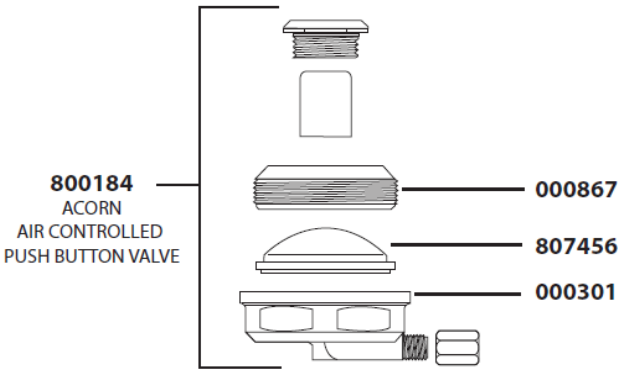	

DIVERTER STEM	DIVERTER STEM	RH HOT STEM
807673	**000224**	**804984**

RH "H/C" STEM	SELF CLOSING UNIT 3" LONG
807672	**000241**

800845 -Hot
800850 -Cold
Uses Standard **800125** Aquaseal Washer

800311 -Hot
800312 -Cold
Uses Standard **800125** Aquaseal Washer

800190 -Cold Generic
800195 -Hot Generic
800660 - Cold OEM
800665 - Hot OEM
Uses Standard **800125** Aquaseal Washer

RETAINING NUT

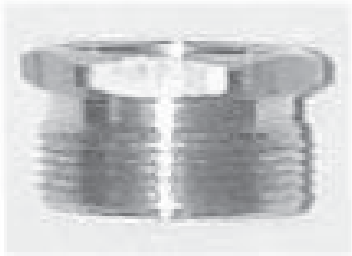

800200

STOP STEM

807753
Uses Standard **800125** Aquaseal Washer

803775 - Hot
803770 - Cold

806010 -Hot
806011 -Cold
Uses Small Aquaseal Washers
803350 (Sold by the Pair)

803365 - Hot
803370 - Cold

803380 - Hot
803375 - Cold

STEMS FOR AMERICAN STANDARD

800311 -Hot
800312 -Cold
Uses Standard
800125 Aquaseal
Washer

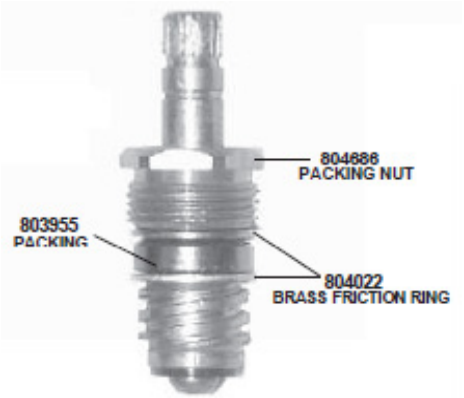

807742 -Hot Stem Only
807741 -Cold Stem Only
2-3/16" LONG

800295 - HOT/ COLD SHORT COLONY STEM 4-1/2" LONG

800305 - DI-VERTER, SHORT COLONY STEM 5" LONG

800300 - H/C LONG COLONY STEM, 5-1/8" LONG

800310 - DI-VERTER LONG COLONY STEM, 5-7/8" LONG

200020 - TUB STEM WRENCH FOR COLONY STEMS

2

 800285- Hot **800290**- Cold	SPINDLE ASSEMBLY **800191**	3-1/16" LONG STEM **809103**- Hot **809104**- Cold
DIVERTER STEM **804784**	DIVERTER STEM **807598**	H/C LAV STEM CARTRIDGE WITH ADAPTOR 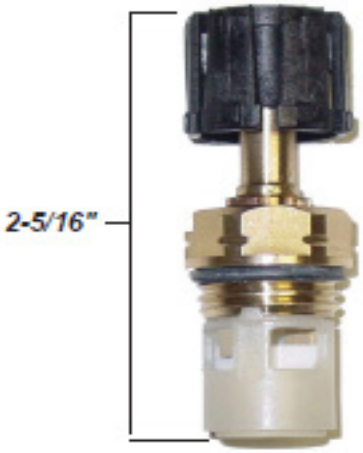 **800029**

CARTRIDGE ASSEMBLY KIT

801330

AQUARIAN CARTRIDGE

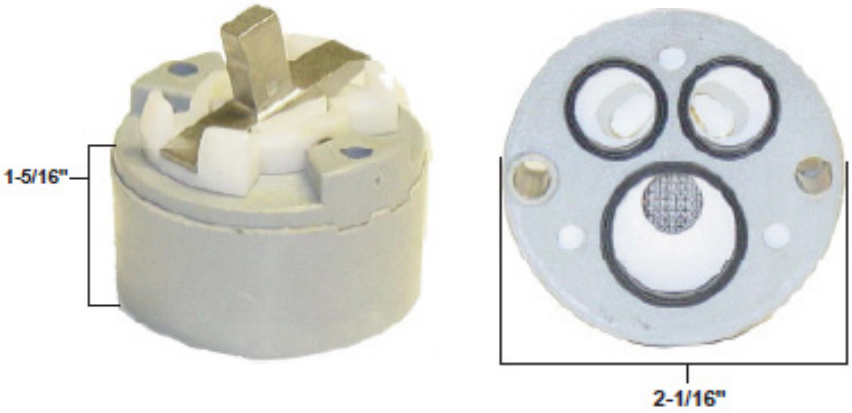

801269

CARTRIDGE ASSEMBLY (ACTUAL SIZE)

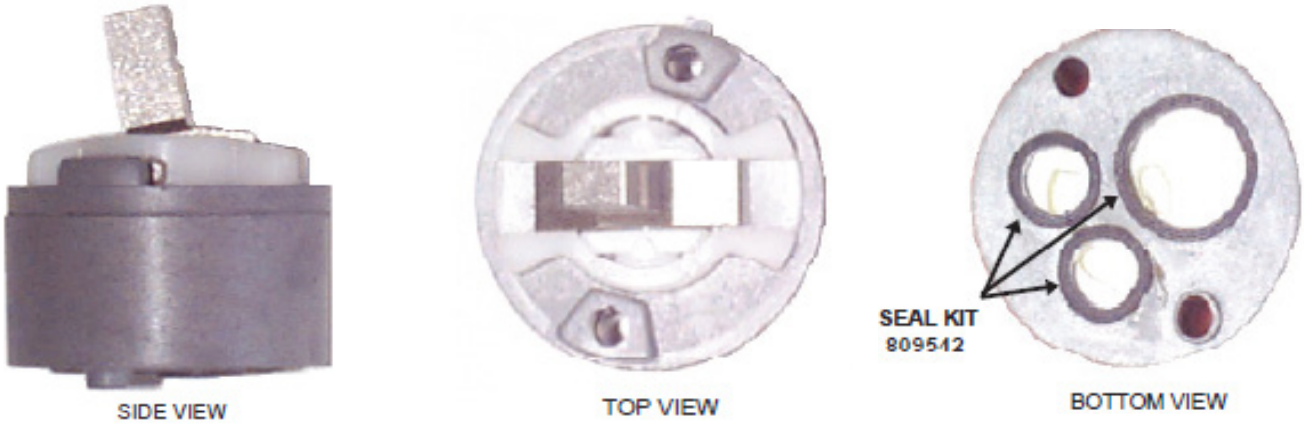

800280

CARTRIDGE ASSEMBLY (ACTUAL SIZE)

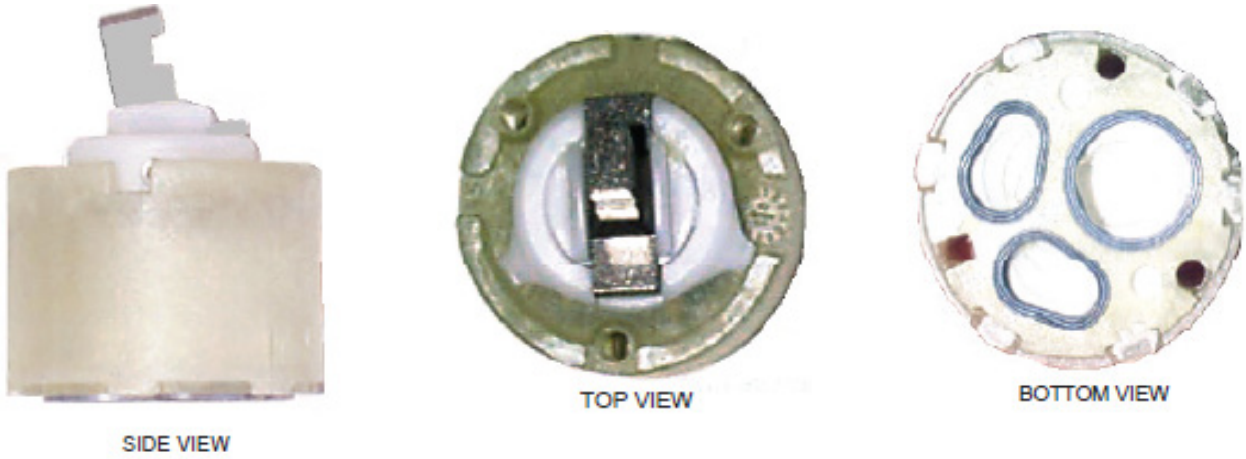

803805

2

REPLACEMENT STEMS/CARTIDGES FOR B&K

802223
LAVATORY STEM

802375
WORK FORCE STEM
REPLACES DELTA, DELEX &
PREMIER

800565
STEM FOR B&K, DELTA,
PREMIER AND OTHERS

REPLACEMENT STEMS/CARTIDGES FOR BRADLEY

806936
UPPER VALVE
"TIMER" ASSEMBLY

801774
LOWER VALVE BODY

806979
LAVATORY CARTRIDGE
COMPLETE

CARTRIDGE ASSEMBLY FOR BRIGGS/SAYCO

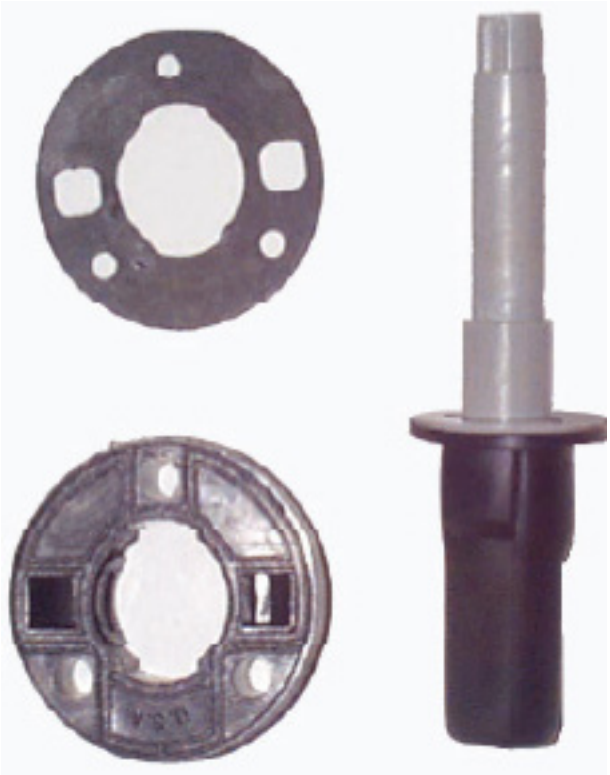

804947

REPAIR KIT FOR BRIGGS/SAYCO

801405

REPLACEMENT STEMS FOR BRIGGS/SAYCO

801040 - Hot
801041- Cold

804887 - Hot
804888 - Cold

REPLACEMENT STEMS FOR BURLINGTON BRASS

805802

2

1-1/2" LONG	2" LONG	1-1/2" LONG
800335 - HOT GENERIC **800340** - COLD GENERIC **806640** - HOT OEM **806639** - COLD OEM	**808174** - HOT GENERIC **808012** - COLD GENERIC	**800158** - HOT GENERIC **800159** - COLD GENERIC **800541** - HOT OEM **800542** - COLD OEM

5-3/16" LONG	5-7/8" LONG DIVERTER	5-7/8" LONG DIVERTER	5-1/4" LONG	5" LONG DIVERTER	5" LONG
800360 - Hot/Cold	**800365**	**800355**	**802132** - OEM **800333** - GENERIC HOT/COLD OLD STYLE	**802134**	**800345** - Hot/Cold

2-11/16" LONG NEW STYLE (SHORT)

808174 - HOT GENERIC
808012 - COLD GENERIC

2-11/16" LONG OLD STYLE (SHORT)

808174 - HOT GENERIC
808012 - COLD GENERIC

2-3/16" CERAMIC, OEM (SHORT)

808174 - HOT GENERIC
808012 - COLD GENERIC

2-7/8" LONG CERAMIC, OEM (LONG)

808174 - HOT GENERIC
808012 - COLD GENERIC

3-3/8" LONG NEW STYLE (LONG)

805939 - HOT, OEM
805935 - COLD, OEM

3-3/8" LONG OLD STYLE (LONG)

800215 - HOT, GENERIC
800220 - COLD, GENERIC

3-7/8" LONG BRAD PACK STEM UNITS (FOR BRADLEY)

805210 - HOT
805211 - COLD

REPAIR KIT FOR QUATURN & SLOW COMPRESSION CARTRIDGES (REPAIRS TWO STEMS)

008294

CHICAGO QUATURN REPAIR PARTS - NEW STYLE

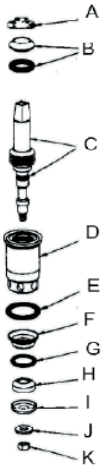

QUATURN OPERATING CARTRIDGES

	CHROME EXPOSED CAP SHORT		ROUGH BRASS CONCEALED CAP LONG	
DESCRIPTION	HOT	COLD	HOT	COLD
A - CAP	801920	801920	803125	803125
B - PACKING ASSY.	801930	801930	801930	801930
C - STEM W/O RING				
D - SLEEVE W/FLANGE				
E - O-RING	808029	808029	808029	808029
F - SEAT	803119	803119	803119	803119
G - O-RING	407153	407153	407153	407153
H - SEAT WASHER SEMI-SOFT	805932	805932	805932	805932
I - RETAINER	801945	801945	801945	801945
J - WASHER	801950	801950	801950	801950
K - NUT	801925	801925	801925	801925

CHICAGO QUATURN REPAIR PARTS - OLD STYLE

801920 - C.P. CAP FOR SHORT STEM
803125 - ROUGH BRASS FOR LONG STEM
402150 - GASKET
801930 - PACKING KIT (O-RING & PACKING, NEW STYLE)
802477 - OLD STYLE PACKING ONLY
801935 - RUBBER COATED SEAT
801945 - RETAINER
801950 - WASHER
801925 - NUT
801984 - YELLOW PVC
805931 - SOFT BLACK
801940 - YELLOW MED. HARD

2-3/4" LONG
SHORT STYLE

803491 - HOT
803492 - COLD

3-3/8" LONG
LONG STYLE

803493 - HOT
803494 - COLD

NAIAD PUSH-BUTTON UNIT FOR **EXPOSED** CAP INSTALLATION (ADJUSTABLE RUNNING CYCLE FROM 2-15 SECONDS)

803010

NAID PUSH BUTTON UNIT FOR **CONCEALED** CAP INSTALLATION (ADJUSTABLE RUNNING CYCLE FROM 2-15 SECONDS)

801810

CHICAGO FAUCET SELF CLOSING FOOT PEDAL VALVES (FOR ALL PEDAL VALVES)

801988 - HOT OR COLD

CHICAGO FAUCET SELF-CLOSING PUSH BUTTON VALVES

802245 - HOT, SELF-CLOSING (NON-METERING)
801987 - COLD, SELF-CLOSING (NON -METERING)
803155 - PLAIN, SELF-CLOSING (NON-METERING)
803040 - HOT, SELF-CLOSING (METERING)
803045 - COLD, SELF-CLOSING (METERING)
803012 - PLAIN, SELF-CLOSING (METERING)

CHICAGO KLO-SELF LONG STEM UNIT

801804

JIFFY REPAIR KIT (REPAIRS 2 VALVE UNITS)
FOR ALL CHICAGO PUSH BUTTON UNITS ON THIS PAGE

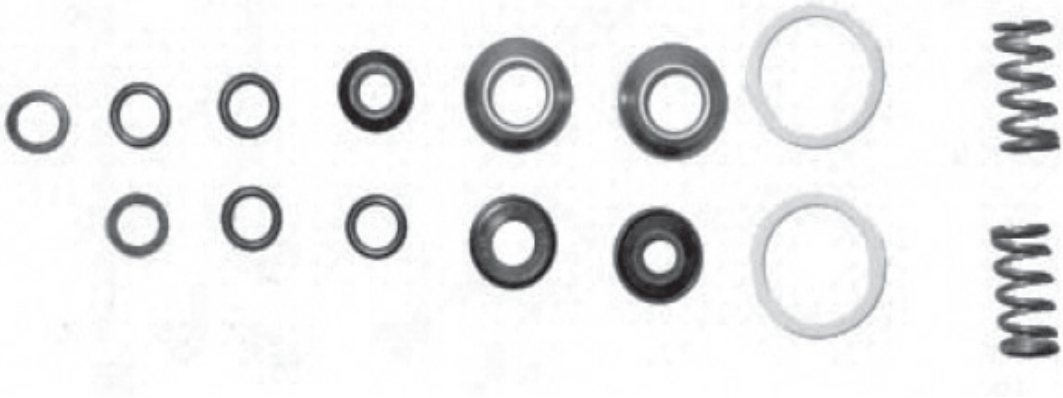

801805

STEMS FOR CRANE

H/C LAV STEM
801610 - HOT
801601 - COLD
1-7/16" LONG

DIASLEASE STEM
800225 - HOT
800230 - COLD
1-7/16" LONG

DIASLEASE STEM
800235 - HOT
800240 - COLD
2-7/8" LONG

806004
SELF-CLOSING KNEE VLAVE
2-15/16" LONG

807666
HOT/COLD TUB STEM
6" LONG

808304
DIVERTER STEM
5-5/8" LONG

806028
DIVERTER STEM
5-5/8" LONG

801600
H/C TUB STEM
4-5/8" LONG

802426
H/C TUB STEM
4-5/8" LONG

807708
H/C TUB STEM
4-5/8" LONG

REPLACEMENT STEMS & CARTRIDGES FOR DELTA

806803 - SHOWER VALVE CARTRIDGE

804054 - OEM DELTA SHOWER VALVE CARTRIDGE

800370 - OEM DELTA SCALD GUARD CARTRIDGE

807749 - SHOWER/ TUB DIVERTER STEM

601254 - SLOW-CLOSE CARTRIDGE. 3-9/16"

804103 - 3-1/16" TUB DIVERTER STEM

802195- (NEW STYLE) STEM EXTENDER FOR DELTA & B&K SHOWER VALVES)

401120- GENERIC STEM EXTENDER (OLD STYLE)

808684 - DIAMOND SEAL CARTRIDGE. FOR SINGLE LEVER FAUCETS

CARTRIDGE FOR TWO HANDLE FAUCETS. FITS DELTA, DELEX & FEDERAL

800565 - GENERIC
801418 - OEM
800023 - OEM BRASS/ CERAMIC
STEM KIT FOR USE W/ BLADE HANDLES
802375 - B&K GENERIC HEAVY
DUTY DELTA TYPE
804911 - C.P. HANDLE SCREW, ONLY FOR STEM

STEMS FOR DELTA/CAMBRIDGE BRASS-TEK

806816- HOT
806817- COLD
1-25/37" LONG

806818- HOT
806820- COLD
2-9/32" LONG

STEMS FOR ELJER

807283 - HOT
807593- COLD
2-3/8" LONG

807254 - HOT
2-7/8" LONG

805913 - HOT
805969- COLD
2-1/4" LONG

808081 - HOT
808080- COLD
2-3/8" LONG

804033 - HOT
804034- COLD
2-13/16" LONG

801025 - HOT
801030- COLD
1-7/16" LONG

803425 - HOT
1-7/16" LONG

804414 - HOT
1-7/16" LONG

804341 - HOT
3-1/2" LONG

803415
DIVERTER STEM
4-1/8" LONG

803420 - H/C STEM
4-1/16" LONG

STEMS FOR ELJER

808825
DIVERTER STEM
6-1/32" LONG

808826
HOT/COLD
4-25/32" LONG

STEMS & CARTRIDGES FOR ELKAY

803009 - HOT
(REPLACES YELLOW OR BRASS STEM)
802300 - COLD
(REPLACES GREEN OR BRASS STEM) 2-1/4" LONG

806680
GREY CARTRIDGE
2-1/4" LONG

802293
S.L. FAUCET CARTRIDGE
3-3/8" LONG

STEMS FOR ENCORE

807032 - HOT
807031 - COLD

STEMS & CARTRIDGES FOR FISHER - 1/2" KITS

802072-HOT STEM KIT WITH ALL ITEMS PICTURED ABOVE
802073-COLD STEM KIT WITH ALL ITEMS PICTURED ABOVE

809702-HOT STEM KIT WITH ALL ITEMS PICTURED ABOVE
809703-COLD STEM KIT WITH ALL ITEMS PICTURED ABOVE

802226-HOT/R.H. STEM ADAPTOR ONLY
802228-COLD/L.H. STEM ADAPTOR ONLY

STEMS & CARTRIDGES FOR FISHER - 3/4" KITS

808843-HANDLE KIT WITH RED & BLUE INDEX W/ SCREW

809719-HOT STEM KIT WITH ALL ITEMS PICTURED
809720-COLD STEM KIT WITH ALL ITEMS PICTURED

NOTE: SAME KITS AS PICTURED ON LEFT, BUT W/SPRING/STEM SEAT WASHER UNIT
809717-HOT REPAIR KIT
809718-COLD REPAIR KIT

802229-HOT/R.H. STEM ADAPTOR ONLY
802230-COLD/L.H. STEM ADAPTOR ONLY

STEMS & CARTRIDGES FOR GERBER

800376 - RH HOT/COLD
TUB STEM
5-3/8" LONG

800385 - RH HOT/COLD
TUB STEM
5-1/2" LONG

800394 - HOT
800393 - COLD
1-15/16" LONG
O/S LAVATORY

800392 - HOT
800391- COLD
1-5/8" LONG
KITCHEN FAUCET

201153 -
GERBER TUB
STEM WRENCH

804609 -
S.L. SHOWER
CARTRIDGE
3-5/16" LONG

803026 -
CARTRIDGE
FOR SINGLE-LEVER
FAUCET

STEMS & CARTRIDGES FOR GERBER

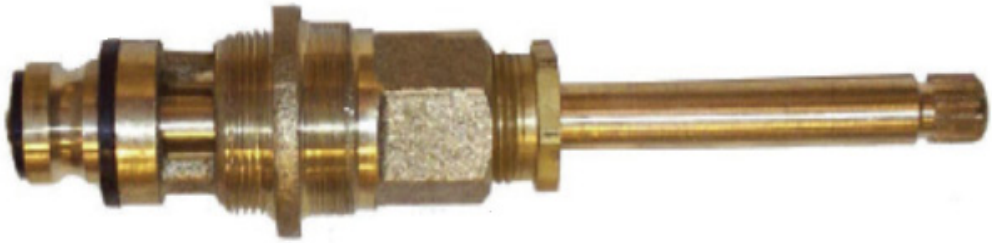

800390 - DIVERTER
TUB STEM
5-3/4" LONG

809001 - HOT
809002 - COLD
1-3/4" LONG
CERAMIC CARTRIDGE
FOR LAVATORY

800378 - HOT
800377 - COLD
1-9/16" LONG
LAVATORY STEM
NEW STYLE

STEMS FOR HARCRAFT

805854 -HOT
805853 - COLD
1-25/32" LONG

800400 -
H/C LAVATORY STEM
1-5/8" LONG

800405 - H/C TUB STEM
4-9/16" LONG

800410 - DIVERTER TUB STEM
4-1/4" LONG

STEMS FOR INDIANA BRASS

807719 - DIVERTER STEM
4-11/16" LONG

803452 - HOT TUB STEM
803451 - COLD TUB STEM
3-11/16" LONG

802620
"H/C" LAV STEM
1-1/2" LONG

802525
H/C LAVATORY STEM
1-1/2" LONG

802510 - HOT
802511 -COLD
1-1/2" LONG

200052
TUB STEM WRENCH
FOR INDIANA BRASS

STEMS & CARTRIDGES FOR KOHLER

808834 - S.L. FAUCET CARTRIDGE
CORALAIS

804767 - PRESSURE BALANCE
BODY SERVICE KIT

STEMS & CARTRIDGES FOR KOHLER

805778
VALVE ASSEMBLY & REPAIR KIT
W/ O-RINGS

800203 - HOT
800204 - COLD
2-1/8" LONG

800260-HOT W/ BRASS INSERT
800265-COLD W/BRASS INSERT
800430-HOT W/PVC INSERT
800440-COLD W/PVC INSERT
2-1/2" LONG

804903
DIVERTER TUB STEM
W/ PLASTIC SLEEVE
5-3/16" LONG

807255
SLEEVE ONLY

803468
RH "H/C" STEM
1-7/16" LONG

807278
2" LONG

801402
CAM & SLEEVE KIT

STEMS & CARTRIDGES FOR KOHLER

804515
DIVERTER STEM - 5-7/16”

807738 - HOT
807737 - COLD
2-1/2” LONG

803032 - H/C
TUB STEM W/
SLEEVE
4-3/16” LONG

807255
SLEEVE ONLY

807282
BONNET NUT
1-3/8” LONG

801456
BARREL

803465 - HOT
803460 - COLD
LAVATORY STEM
1-7/16” LONG

807609
STOP STEM
1-11/16” LONG

801430
STOP STEM

803601 - COLD
BARREL

808034 - SLEEVE
1-5/16” LONG

801416
STOP STEM, 1-5/16” LONG

803940
S.L. CARTRIDGE

STEMS & CARTRIDGES FOR KOHLER

804646
CAP & STEM ASSEMBLY

803470 - HOT
802415 - COLD
TUB STEM
4-1/4" LONG

805009
SLEEVE ONLY

803001 - HOT
803000 - COLD
3-7/16" LONG

001319
STOP STEM

803435 - BRIGHT CHROME STEM , 6" LONG

803540 - BRIGHT CHROME DIVERTER , 6-1/16" LONG

804310 - DIVERTER TUB STEM, 5-1/4" LONG

STEMS & CARTRIDGES FOR LEONARD

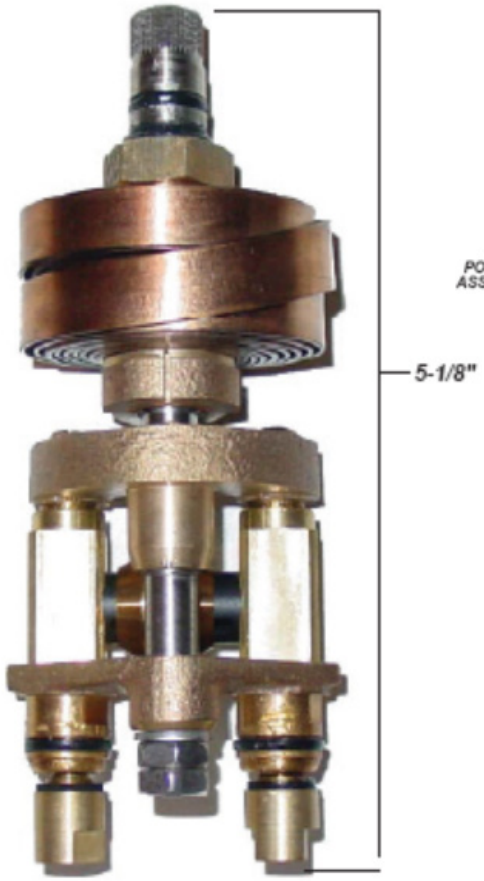

000064 - THERMOSTATIC CONTROL GROUP

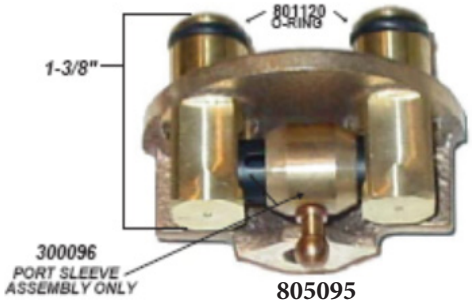

805095
BRIDGE ASSEMBLY

804004
STOP STEM, 1-1/8" LONG
USED W/ **807649,**
PICTURE BELOW

NEW STYLE

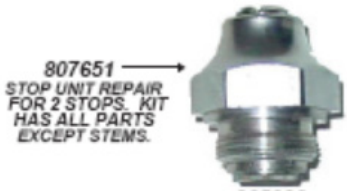

805096
1-1/8"LONG
]C.P. STOP UNIT

OLD STYLE

807649
STOP BONNETT NUT ONLY
ROUGH BRASS

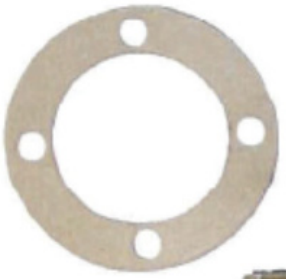

300252
SPINDLE ASSEMBLY
4-3/4" LONG

STEMS FOR MICHIGAN BRASS

804556 - HOT
804555 - COLD
2-1/16" LONG

802100 - H/C STEM ASSEMBLY, 4-3/8" LONG
802101 - H/C STEM ASSEMBLY, 3-7/8" LONG

804575 - DIVERTER STEM, 4-5/16" LONG

STEMS & CARTRIDGES FOR MILWAUKEE

802703
DIVERTER STEM
5-3/4" LONG

802702
R.H. "H/C" STEM
4-1/2" LONG

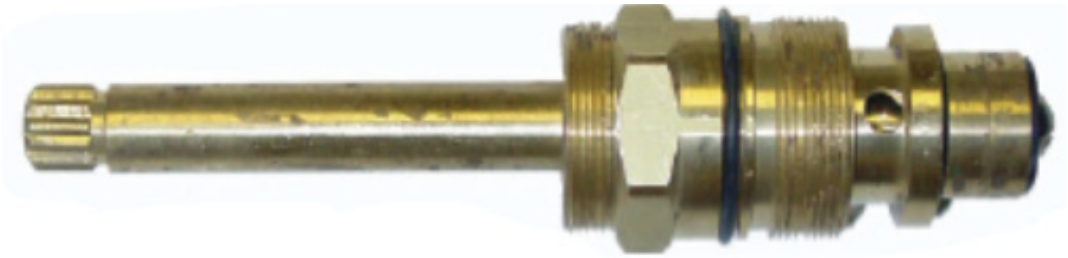

802503
DIVERTER STEM
4-3/4" LONG

804467
2-5/8" LONG

MIXET CARTRIDGE

801020 - SHOWER VALVE CARTRIDGE, 4-3/8" LONG

STEMS & CARTRIDGES FOR MOEN

800785
S.L. BRASS
CARTRIDGE
3-7/8" LONG

805052
S.L. PVC/BRASS
CARTRIDGE
4-3/16" LONG

804836
S.L. CARTRIDGE
4-1/8" LONG

800739
STEM EXTENDER
2-7/8" LONG

809019
FAUCET CARTRIDGE
3-9/16" LONG

804360
PVC CARTRIDGE
2-1/16" LONG

STEMS & CARTRIDGES FOR NIBCO

800459 - CARTRIDGE, 1-25/32" LONG

800460 - CARTRIDGE, 1-15/16" LONG

STEMS FOR PERLIC

807754 - PAIR
2-3/8" LONG

STEMS FOR PHOENIX

801231 - HOT/COLD
1-11/16" LONG

STEMS FOR POWERS

BALANCING CARTRIDGE
REPLACEMENT
000920 - OEM
000920G - GENERIC

STEMS & CARTRIDGES FOR PRICE PFISTER

800270
"H/C" STEM
1-13/16" LONG

804791 - L.H.
COLD
1-14/16"

800465 - HOT
800466 - COLD
1-9/16" LONG

805039 -
STOP STEM
1-1/4" LONG

807260 -
R.H. H/C
LAVATORY STEM
1-7/8" LONG

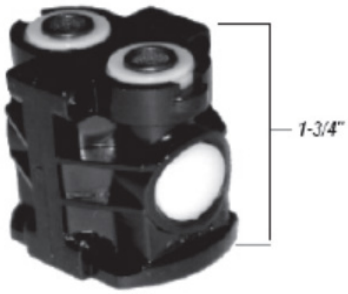

801553
TUB VALVE
CARTRIDGE

800462 - HOT
800461- COLD
3" LONG

800271 - SINGLE CONTROL CARTRIDGE, 4" LONG

802024
R.H. H/C
2-1/8" LONG

STEMS & CARTRIDGES FOR PRICE PFISTER

808184
DIVERTER STEM
5-1/8" LONG

801006
R.H. "H/C" STEM
5-1/8" LONG

800470
R.H. "H/C" STEM
5-5/8" LONG

800475
DIVERTER STEM
5-5/8" LONG

801555
TUB/SHOWER STEM
2-3/16" LONG

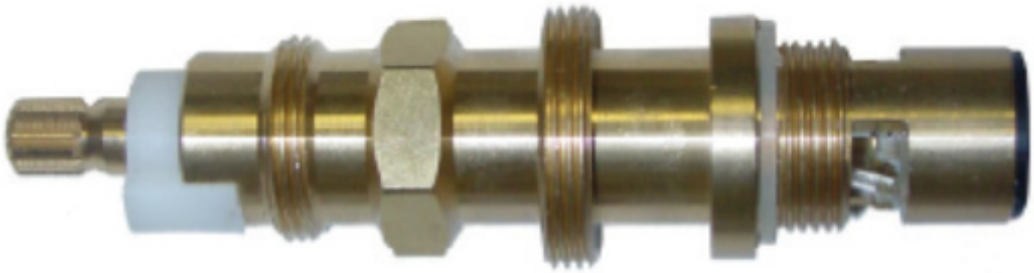

807896
R.H. "H/C" STEM
4-1/2" LONG

STEMS FOR ROYAL BRASS

801342
R.H. "H/C" STEM
7-1/8" LONG

801341 - HOT
801885 - COLD
4-1/8" LONG

804050
R.H. "H/C" TUB STEM
4-1/16" LONG

807501 - HOT
807502 - COLD
1-11/16" LONG

801886
DIVERTER STEM
6-7/16" LONG

STEM FOR SAVOY

805980
4" LONG

STEMS FOR SAYCO

800325 -HOT
807667 - COLD
4-1/2" LONG

800330
DIVERTER STEM
4-1/2" LONG

STEM FOR SAYCO

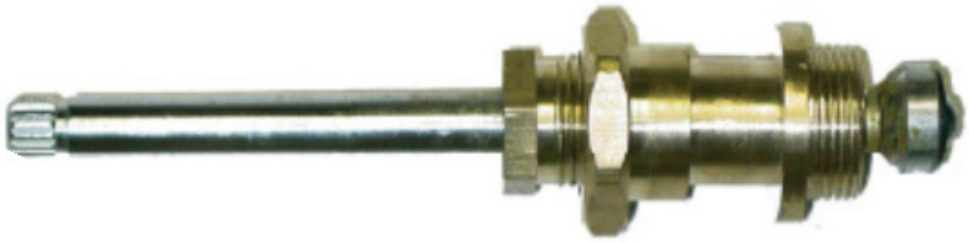

804894
"H/C" STEM, 4-7/8" LONG

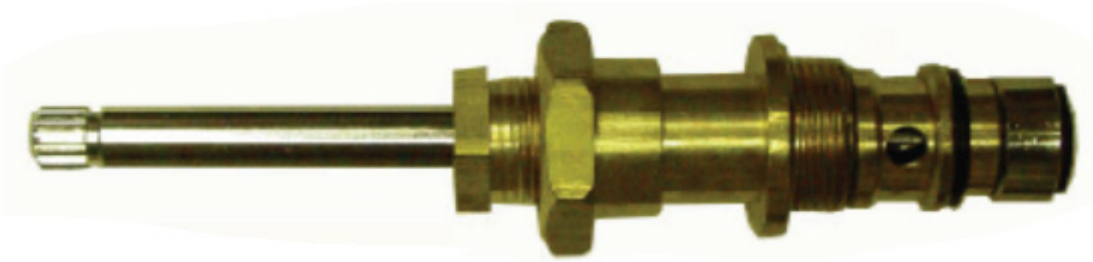

804895
DIVERTER TUB STEM, 4-7/8" LONG

807591 - HOT
807592 - COLD
2" LONG

800315 - HOT
800320 - COLD
1-1/2" LONG

SEARS

803461 - HOT
803462 - COLD
1-3/4" LONG

STEMS & CARTRIDGES FOR STEAKMAN

803665
R.H. "H/C"
2-11/16" LONG

801302 - HOT
801303- COLD
2-5/16" LONG

808305 - HOT
805875- COLD
2" LONG

801301 - HOT
801300- COLD
3-1/4" LONG

805863 - HOT
805861- COLD
3-9/16" LONG

804027
COLOR-TEMP
SHOWER CARTRIDGE

803035 - HOT
803030- COLD
1-5/8" LONG

808131 - HOT
808132- COLD
1-7/8" LONG

804580
DIVERTER STEM

807998 - HOT
2-7/32" LONG

803221 - HOT
803222 - COLD
4-7/8" LONG

STEMS & CARTRIDGES FOR SPEAKMAN

807125
R.H. "H/C" STEM
5-1/4" LONG

804565
R.H. "H/C" STEM
4" LONG

805208
R.H. "H/C" STEM
4-13/16" LONG

805812
R.H. "H/C" STEM
4-1/16" LONG

805813
DIVERTER STEM
4-5/16" LONG

STEMS & CARTRIDGES FOR STERLING/STARFLO

8058338 - R.H. "H/C" STEM, 4-3/8" LONG

805839 - DIVERTER STEM, 5-1/8" LONG

STEMS & CARTRIDGES FOR STERLING

400109
4-17/32" LONG

400104
5" LONG

800490
R.H. "H/C" STEM
4-11/16" LONG

800495
DIVERTER STEM
4-11/16" LONG

800500
R.H. "H/C" STEM
5-1/2" LONG

801860
R.H. "H/C" STEM
3-13/16" LONG

800480 - HOT
800485- COLD
1-7/8" LONG

800480 - HOT
800485- COLD
1-7/8" LONG

400109
STERLING CARTRIDGE
ASSEMBLY
4-17/32" LONG

STEMS & CARTRIDGES FOR STERLING

804472
REPAIR KIT

800505
DIVERTER STEM
5-3/4" LONG

805240-HOT
805241-COLD
2-5/16" LONG

804923
S.L. CARTRIDGE
2-7/16" LONG

STEMS FOR STREAMWAY

805050-HOT
805049-COLD
1-11/16" LONG

STEMS & CARTRIDGES FOR SYMMONS

801253
4-7/16" LONG

801265
5-3/16" LONG

801521
4-5/16" LONG

801267- NEW STYLE
(LESS PLATE)
801258- OLD STYLE
(W/PLATE)
4-7/8" LONG

803006
ABOUT 4" LONG
WHEN ASSEMBLED
& IN OPEN POSITION

803351

807273 - 4-1/16" LONG

804553 - 5-1/2" LONG

STEMS AND STEM ASSEMBLIES FOR T & S

800970
PRE-RINSE SPRAY
VALVE ASSEMBLY
2-1/4" LONG

805941-HOT
805942-COLD
800919- PAIR OF BOTH
2-9/16" LONG

804770 - HOT
805942 - COLD
2-7/8" LONG
(W/STANDARD WASHERS)

805231 - HOT
805230 - COLD
2-7/8" LONG
(W/STANDARD WASHERS)

804989 - HOT
804990 - COLD
BARREL ONLY
1-17/32" LONG
(W/FIXED MACHINED SEATS)

807807 - R.H. HOT/COLD
2-13/16" LONG
(FOR "BIG-FLO" FAUCETS)

804873-HOT **804874**-COLD
STEM & HANDLE ASSEMBLY
(FOR B-1100 SERIES WORK BOARD FAUCETS)

800916-HOT **800917**-COLD
2-3/4" LONG
(OLD STYLE DOUBLE
LEAD THREADS)

STEM AND HANDLE ASSEMBLY

800910 - HOT W/STANDARD WASHERS
800915 - COLD W/STANDARD WASHERS
802435 - HOT (SPRING CHECK TYPE PLUNGERS)
802436 - COLD (SPRING CHECK TYPE PLUNGERS)

HANDLE ONLY
800935 - SINGLE HANDLE
800901 - HANDLE PAIR (GENERIC)

T & S CERAMA CARTRIDGE

NO BONNET
803641 - HOT
803642 - COLD

CERAMA ESCUTCHEON BONNET
808988 - HOT
809989 - COLD

CERAMA BONNET

STANDARD
809906 - HOT
809907 - COLD

WITH INTEGRAL SPRING CHECKS
600253 - HOT
600254 - COLD

STEMS FOR UNION BRASS

809066-HOT
809065-COLD
1-7/16" LONG

801085-HOT
801086-COLD
3-5/16" LONG

808810 - DIVERTER STEM
W/ BONNET NUT
4-7/8" LONG

801185 - DIVERTER
STEM LESS BONNET
NUT, 4-5/8" LONG

807761 - BONNET
NUT ONLY FOR
801185

805801
DIVERTER STEM
4-13/16" LONG

803332-DIVERTER
STEM
3-3/4" LONG

801080-R.H. "H/C"
3-1/4" LONG

801091-HOT
801090-COLD
1-17/32" LONG

CARTRIDGES FOR VALLEY

805602(FOR SHOWER VALVES AND S.L. FAUCETS W/O SPRAY) **804461**(FOR S.L. FAUCETS W/ SPRAY) 2-7/16" LONG

801271 - S.L. CARTRIDGE 2-1/4" LONG

809587 - "H/C" CARTRIDGE 2-1/2" LONG

807114-HOT
807115-COLD
ROUGH BRASS

807114-HOT
807115-COLD
ROUGH BRASS

807114-HOT
807115-COLD
ROUGH BRASS

807114-HOT
807115-COLD
ROUGH BRASS

STEMS FOR WATER SAVER

805054-HOT
805055-COLD
2-7/32" LONG

STEMS & CARTRIDGES FOR WOLVERINE

800106
LONG CARTRIDGE
3-5/8" LONG

804601-HOT
804602-COLD
2-3/16" LONG

804937-HOT
804938-COLD
2-15/32" LONG

STEMS FOR ZURN

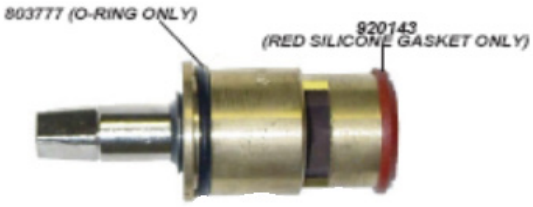

805975-HOT
805974-COLD
2-1/8" LONG

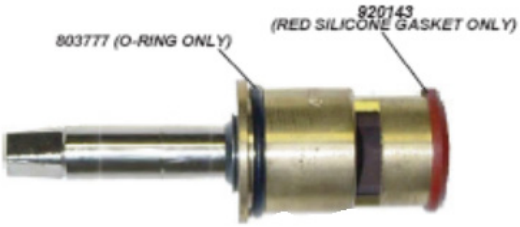

805972-HOT
805973-COLD
2-7/8" LONG

STEMS & STEM KITS FOR IMPORT FAUCETS

802255 - STEM & HANDLE KIT FOR IMPORT SERVICE SINK FAUCETS
(STEM MAY BE STAMPED CHG)

802258
STEM & HANDLE KIT FOR IIMPORT FAUCETS
(STEM MAY BE STAMPED CHG)

801045-HOT
801046-COLD
1-3/4" LONG

HANDLES FOR AMERICAN BRASS

803474 - SOLD IN PAIRS
804643 - DIVERTER

805971 - SOLD IN PAIRS
804595 - DIVERTER
1-5/8" TALL
TUB & SHOWER HANDLES

804632 - SOLD IN PAIRS
804642 - **D**IVERTER
1-1/2" TALL
TUB & SHOWER/LAVATORY

HANDLES FOR AMERICAN STANDARD

800004

806029-S.L. HANDLE
FOR AQUARIUM II SHOWER

801332- S.L. HANDLE

800595 - SOLD IN PAIRS ONLY
800597 - DIVERTER

805223-HOT
805222-COLD
802046-HOT RED INDEX ONLY
802045-COLD BLUE INDEX ONLY

800585 - SOLD IN PAIRS ONLY

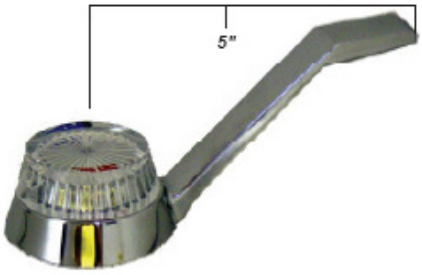

8808917
S.L. HANDLE

801246 - 4" WRIST BLADE HANDLES
SOLD IN PAIRS
802046 - HOT RED INDEX ONLY
802045 - COLD BLUE INDEX
804000 - HANDLE SCREW W/LOCK WASHER

HANDLES FOR AMERICAN STANDARD

803816-HOT OR COLD
BOTH INDEXES INCLUDED
LAVATORY HANDLE
802475-HOT INDEX ONLY
802470-COLD INDEX ONLY

803820 - SOLD IN PAIRS ONLY
806025 - DIVERTER
802475 - HOT INDEX ONLY
802470 - COLD INDEX ONLY
807268 - DIVERTER INDEX ONLY

800301 - SOLD IN PAIRS
800303 - DIVERTER
1-7/8" TALL, 1-17/32" BASE
802475 - HOT INDEX ONLY
802470 - COLD INDEX ONLY
807268 - DIVERTER INDEX ONLY

807627 - SOLD IN PAIRS ONLY
807529 - DIVERTER

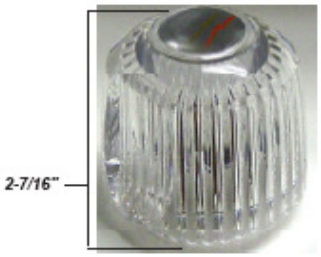

008252 -3-HANDLE KIT
FOR AMS CADET SHOWER

801347-HOT
801348-COLD
4" WRIST BLADE HANDLE

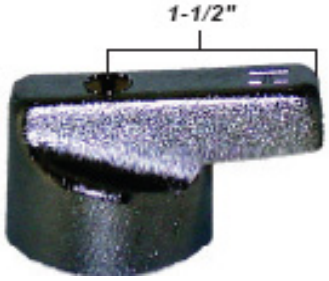

807114-HOT
807115-COLD
ROUGH BRASS

804534 - COLD
804672 - HOT
CHROME PLATED

803315-HOT
803310 - COLD

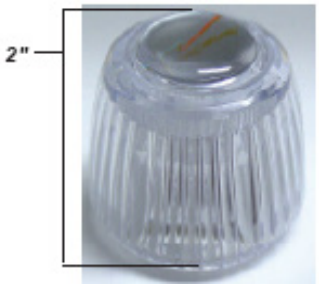

803735 - S.L. ACRYLIC HANDLE
RELIANT LAV/TUB & SHOWER

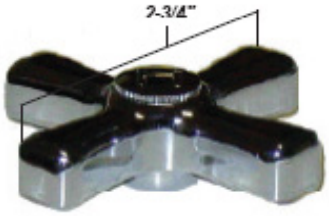

804695 - HOT HANDLE
804696 - COLD HANDLE
801536 - HOT INDEX ONLY
801537 - COLD INDEX ONLY
804000 - SCREW ONLY

HANDLE FOR BRAGG

000105-S.L. ACRYLIC HANDLE
2-1/8" TALL

HANDLE FOR BRADLEY

806997-1-1/8" TALL

HANDLES FOR CENTRAL BRASS

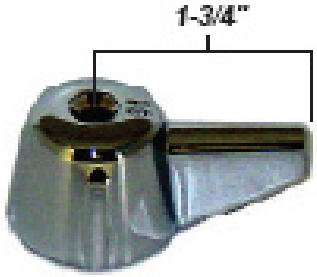

800705- PAIR H/C HANDLES

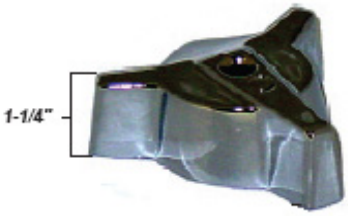

800688- SOLD IN PAIRS

805040 - SOLD IN PAIRS ONLY
1-3/16" TALL, 1-11/16" BASE

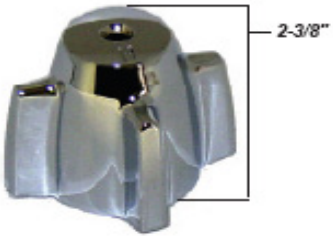

800690 - SOLD IN PAIRS ONLY
800700 - DIVERTER

803876-HOT
803870-COLD
803875-PLAIN

403316- HOT
403317-COLD
4" WRIST BLADE HANDLE

HANDLES FOR CHICAGO FAUCET

803070-HOT
803075 - COLD

809980-PAIR
LAB FAUCET HANDLES

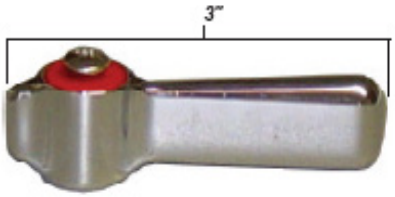

801990-HOT
801989-COLD
LAVATORY BLADE HANDLE

802248 - SOLD IN PAIRS ONLY
4" WRIST BLADE HANDLES

801593-HOT
801594-COLD
METERING VALVE HANDLES

HANDLES FOR CRANE

806038-HOT
806039-COLD
1-3/8" TALL x 1-3/8" BASE

807587 - HOT
807586 - COLD
ACRYLIC HANDLE W/ C.P.
INSERT - 1-7/8" TALL

802001-H/C HANDLE
1-9/16" TALL, 1-15/16" BASE

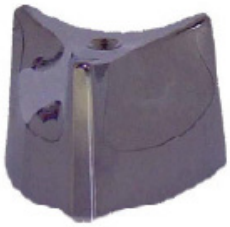

807746-HOT/COLD HANDLE
807756-H/C HANDLE
807744-DIVERTER

807636-H/C HANDLE
4" WRIST BLADE

806026-HOT
806027-COLD
1-17/8" TALL x 1-7/8" BASE

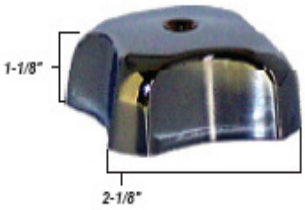

801615-HOT
801620-COLD
TUB

801540-HOT
801545-COLD
1-7/16" TALL x 1-7/16" BASE

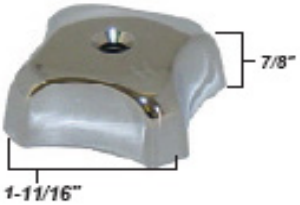

808040-HOT
808041-COLD
LAVATORY

HANDLES FOR DELTA

800555
OFFSET DIAMOND BROACH
2-7/16" TALL, 2-15/16" WIDE

800560 - CENTERED OVAL BROACH
2-7/16" TALL, 2-15/16" WIDE

800550-CENTERED DIAMOND BROACH
2-1/4" TALL, 2-5/8" WIDE

804101- CENTERED OVAL BROACH, 2-7/16" TALL, 2-15/16" WIDE

806975-OFFSET DIAMOND BROACH
2-7/16" TALL, 2-15/16" WIDE, OLD STYLE

807750-CENTERED "D" BROACH FOR HANDLE LAV, 2-1/4" TALL, 2-11/16" WIDE

802312 -LAVATORY & SHOWER HANDLE , ALSO FITS: PREMIER, DELEX and B&K
1-13/16" TALL, 1-5/8" BASE
INCLUDES ALL 3 INDEXES (H,C,D)

807286
SHOWER HANDLE
2" TALL, 1-15/16" BASE

805722 - GENERIC
805796 - OEM DELTA
LAVATORY HANDLES, PAIR
ALSO FITS: PREMIER, DELEX and B&K - 1-13/16" TALL, 1-3/8" BASE

804351
S.L. HANDLE
WITH SET SCREW

801688 - S.L. HANDLE WITH RED & BLUE DOTS FOR TEMPERATURE INDICATION W/ SET SCREW
807287 - SAME AS ABOVE EXCEPT NO COLOR DOTS

800580 -
S.L. HANDLE
WITH SET SCREW

802220 - PAIR
ADA APPROVED
WRIST BLADE HANDLE

808171 - PAIR
CENTERED "D" BROACH
1-15/16" TALL, 1-5/8" BASE"

808700
4" BLADE HANDLE
WITH HOT & COLD INDEX

HANDLES FOR ELJER

8010157 - S.L. HANDLE W/ SET SCREW

808942 - LAVATORY HANDLE
1-7/8" TALL, 1-5/16" WIDE

HANDLES FOR ELKAY

800177 - S.L. HANDLE W/ SET SCREW

808060-HOT
808061-COLD
2-1/8" TALL, 1-1/2" BASE

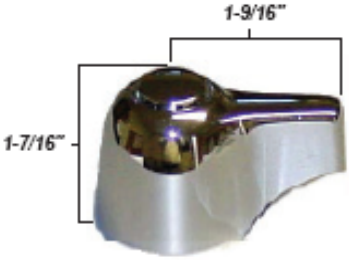

808030 - DIVERTER
805350 - HOT
805351 - COLD

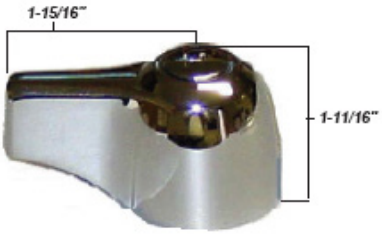

805849 - HOT
805850 - COLD

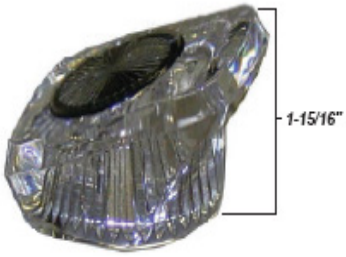

805781 - RECTANGULAR BROACH
W/ C.P. INSERT W/ SET SCREWS
1-7/8" BASE

808792 - PLAIN HANDLE ONLY
808793 - HOT INDEX BUTTON
808794 - COLD INDEX BUTTON
3" TALL, 1-3/4" BASE

803036 - 2-1/4" TALL, 1-3/8" BASE
6-SIDED HEX BROACH
W/ INSERT W/ SPLINED BOTTOM
PLAIN INDEX & SCREW INCLUDED

HANDLES FOR FIAT

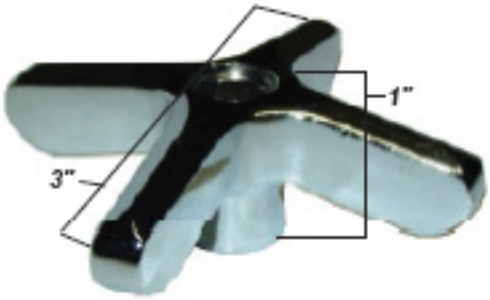

809461C - COLD
809461H - HOT
809476-HANDLE SCREW ONLY

HANDLES, FIT-ALL & UNIVERSAL

800685-PAIR
VISE-GRIP STYLE
"FIT-ALL" BLADE HANDLES
1-1/16" TALL, 2-3/4" BLADE

800515 - PAIR
VISE-GRIP STYLE
"FIT-ALL" CROSS HANDLES
1" TALL

804619 - SMALL PAIR
1-1/4" HEIGHT, 1-3/8" BASE
800521 - LARGE PAIR "H&C"
1-5/16" HEIGHT, 1-1/2" BASE
(ALL HANDLES ABOVE COME WITH FIT-ALL HANDLE INSERTS & SCREWS)

808187-"H/C"
4" "FIT-ALL" WRIST BLADE HANDLE W/FIT-ALL INSERT, SCREW & INDEXES

800530-PAIR "H/C" "FIT-ALL" TUB HANDLES, 2-1/2" TALL, 1-1/2" BASE WITH FIT-ALL INSERTS, SCREWS & INDEXES

804946- "H/C/D" "FIT-ALL" TUB HANDLE, 2" TALL, 2-1/4" BASE WITH FIT-ALL INSERTS, SCREWS & INDEXES

804780-PAIR
ACRYLIC HANDLES
VISE-GRIP STYLE
2" TALL, 1-1/2" BASE

800525-PAIR
ACRYLIC "FIT-ALL"
1-5/8" TALL, 1-3/8" BASE
WITH FIT-ALL INSERTS, SCREWS & INDEXES

809070-PAIR
2-1/16" TALL, 1-3/8" BASE
ACRYLIC "FIT-ALL"
LAVATORY HANDLES W/ FIT-ALL INSERTS, SCREWS & INDEXES

800665 - HANDLE WITH HEX TYPE HANDLE INSERT, FITS DELTA TYPE VALVES

800568 - HANDLE WITH STANDARD STEM BROACH TYPE INSERT FOR PREMIER & OTHERS

HANDLES FOR GERBER

808269
PAIR OF TUB HANDLES
1-1/2" BASE

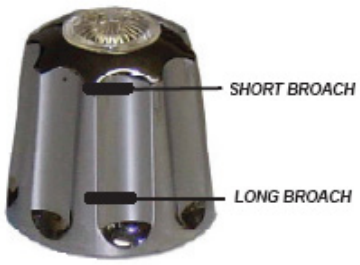

800725 - H&C PAIR (SHORT BROACH)
800735 - DIVERTER (SHORT BROACH)
800736 - "H&C" PAIR (LONG BROACH)
800738 - DIVERTER (LONG BROACH)
TUB & SHOWER

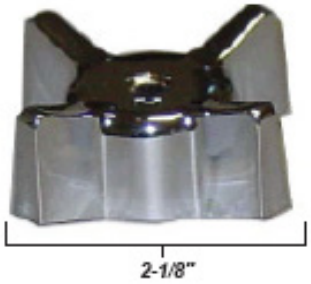

800713 - PAIR

800720 - PAIR
1-1/2" TALL

801691-PAIR
4" WRIST BLADE HANDLES

800715-SOLD AS PAIRS

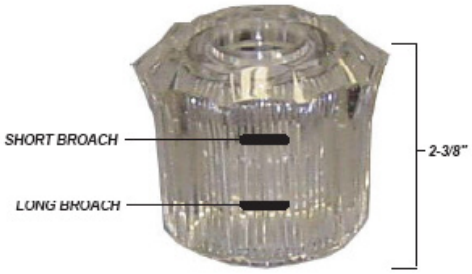

801697-PAIR (LONG BROACH)
801698-PAIR (SHORT BROACH)

801696 - PAIR/LAVATORY HANDLES
1-13/16" TALL, 1-3/8" BASE

800712- DIVERTER

805293 - PAIR

HANDLES FOR HARCRAFT

807730-HOT
8077731-COLD
LAVATORY HANDLE
ALSO FITS PERLICK

807730-HOT
8077731-COLD
LAVATORY HANDLE
ALSO FITS PERLICK

HANDLES FOR IMPORT

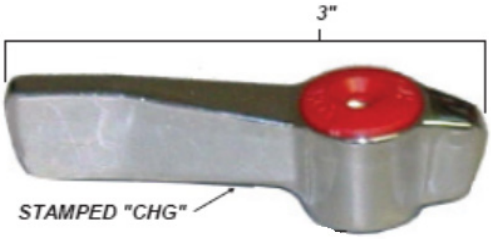

800575-SINGLE LEVER KNOB
2-1/8" TALL, 2" BASE

HANDLES FOR INDIANA BRASS

802630 - SOLD IN PAIRS ONLY
TUB HANDLES
1-3/16" TALL, 1-5/8" BASE

802536 - SOLD IN PAIRS ONLY
15/16" TALL, 1-4/8" BASE

802605-H/C LAVATORY HANDLE
1-3/4" TALL, 1-1/4" BASE

802615-HOT
802610 - COLD
4" WRIST BLADE HANDLES

HANDLES FOR KOHLER

806974
DIVERTER PULL HANDLE
1-1/4" TALL

804985-COLD
804986-HOT
4" WRIST BLADE HANDLES, OEM

807408-PAIR
2-5/8" TALL, 1-1/2" BASE

805082- PAIR H/C HANDLES
805084 - DIVERTER
1-5/8" TALL

008474-PAIR
TUB & SHOWER HANDLES

807413-H/C PAIR
LAVATORY HANDLE

803636-HOT
803635-COLD

801438 - HOT
801437 - COLD
4" BLADE HANDLES
OEM

HANDLES FOR KOHLER

801078
TUB HANDLE W/
H, C & D INDEXES
2-3/16" TALL

801100
LAV/TUB HANDLE
W/ H & C INDEXES
1-11/16" TALL

808078
LARGE ACRYLIC
HANDLE KIT
2-7/8" TALL, 1-7/8" BASE

000731 - W/ LINE INDEX
804991 - W/ H/C INDEX
1-7/8" TALL, 1-3/4" BASE
SQUARE BROACH

801078
TUB HANDLE W/
H, C & D INDEXES
2-3/16" TALL

801100
LAV/TUB HANDLE
W/ H & C INDEXES
1-11/16" TALL

801100
LAV/TUB HANDLE
W/ H & C INDEXES
1-11/16" TALL

000731 - W/ LINE INDEX
804991 - W/ H/C INDEX
1-7/8" TALL, 1-

000830 - S.L. HANDLE

004007 - HOT
004008 - COLD
6" WRIST BLADE HANDLES

808791 - **HOT**
808801 - COLD
4" WRIST BLADE HANDLES

808833 - S.L. HANDLE

4" WRIST BLADE HANDLES
807566 - COLD
807565 - HOT

008285
LAV. BLADE HANDLE
EITHE HOT OR COLD

HANDLES FOR LAWLER

805950
SCREW ONLY FOR HANDLE - **805949**

HANDLES FOR LEONARD

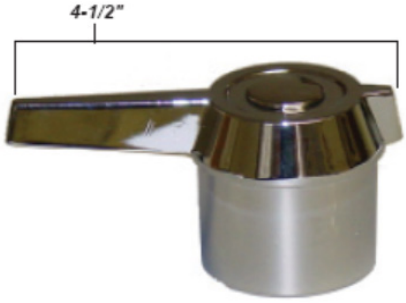

300104 - 2-3/8" TALL, 1-7/8" BASE

804900-2" TALL, 1-5/8" BASE

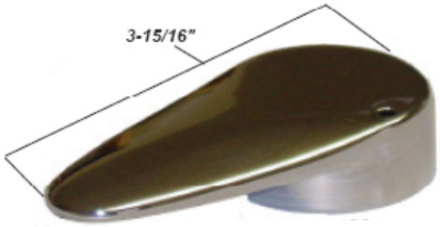

808829

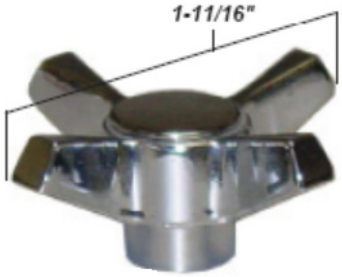

804566-1-1/16" TALL

HANDLES FOR MICHIGAN BRASS

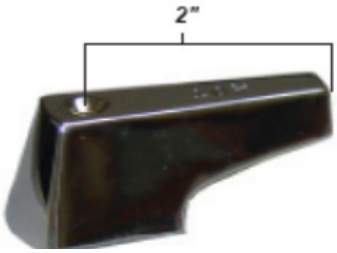

807730-HOT
8077731-COLD
LAVATORY HANDLE
ALSO FITS PERLICK

808925-PAIR
2-1/4" TALL, 1-3/8" BASE

800575-SINGLE LEVER KNOB
2-1/8" TALL, 2" BASE

HANDLES FOR MIXET

800577 - TEMPERATURE CONTROL
HANDLE

800576-VOLUME CONTROL
HANDLE

HANDLES FOR MOEN

804411 - OEM, LONG BROACH
1-11/16" TALL, 2" BASE
POSI-TEMP,
800746 - GENERIC
800744 - GENERIC, LONG BROACH
800578 - GENERIC, SHORT BROACH
1-11/16" TALL, 1-1/2" BASE

800740 -LONG BROACH
1-3/4" TALL, 1-1/2" BASE

800741-SHALLOW BROACH
1-5/8" TALL, 1-1/2" BASE

804052-POSI-TEMP LEVER
DIVERTER HANDLE

805119-S.L. KITCHEN HANDLE

HANDLES FOR NIBCO

807259-HANDLE ONLY, LESS INDEX

HANDLES FOR POWERS

806653-S.L. SHOWER CONTROL HANDLE
805118 - C.P. HANDLE INSERT ONLY

HANDLES FOR PERLICK

807730 - HOT
807731-COLD
LAVATORY HANDLE
Also fits Michigan Brass

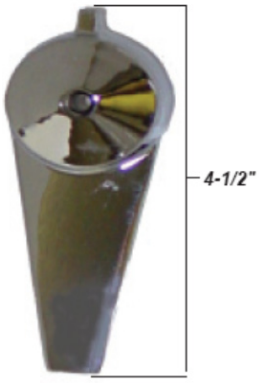

808179-LEVER HANDLE

800077 - SINGLE CONTROL GLASS HANDLE
1-1/2" TALL,
1-13/16" BASE

000671 - SINGLE CONTROL ACRYLIC HANDLE
2-1/4" TALL,
1-11/16" BASE

HANDLES FOR PRICE PFISTER

805798 - PAIR
TUB & SHOWER HANDLES
2-3/8" TALL,
1-7/8" BASE

805797 - PAIR
LAVATORY HANDLES
1-7/16" TALL,
1-7/16" BASE

800727 - HOT
800726 - COLD
LAVATORY HANDLES
1-9/16" TALL, 1-5/8" BASE

801027 - PAIR
801029 - DIVERTER
TUB & SHOWER HANDLES
2-3/8" TALL, 2-1/4" BASE

801715 -
1-7/8" TALL,
1-3/4" BASE

HANDLES FOR ROYAL BRASS

801356-HOT
801355-COLD
4" WRIST BLADE HANDLES
WITH SKIRT

804030-HOT
804040-COLD
804035-DIVERTER
TUB & SHOWER HANDLES

HANDLES FOR SAYCO

800605 - SOLD IN PAIRS
800610 - DIVERTER
TUB & SHOWER HANDLES

800600 - HOT OR COLD
(INCLUDES BOTH INDEXES)
LAVATORY HANDLES

800611-ONLY SOLD IN PAIRS
KITCHEN FAUCET HANDLES

800055 - DIVERTER HANDLE
WITH PLAIN INDEX
2-3/4" TALL, 1-1/2" BASE

HANDLES FOR SPEAKMAN

805092 - SOLD IN PAIRS ONLY

804605 - SOLD IN PAIRS ONLY
804610 - DIVERTER
1-11/16" TALL, 1-7/8" BASE

807690-HANDLE ONLY
1-1/4" TALL
807691- HOT INDEX ONLY
807692 - COLD INDEX ONLY

HANDLES FOR SPEAKMAN

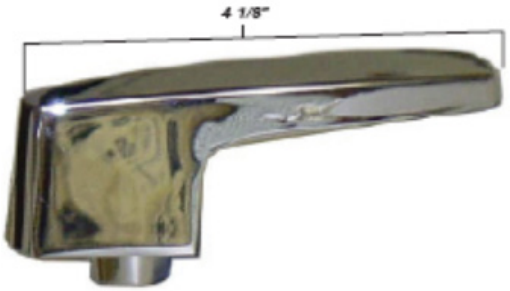

805873 - S.L. SHOWER HANDLE
USES **808084** HANDLE INSERT

804981-PAIR
W/PVC INSERTS
1-1/4" TALL

HANDLES FOR STERLING

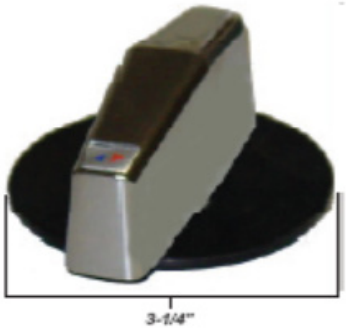

807637
S.L. SHOWER CONTROL

800800 - ONLY SOLD IN PAIRS
800810 - DIVERTER
TUB & SHOWER HANDLES

800801-ONLY SOLD IN PAIRS
LAVATORY HANDLES

805898
HOT/COLD HANDLE
INCLUDES H&C INDEXES
2-5/16" TALL, 1-5/8" BASE

807588 - PAIR
2-3/16" TALL, 1-7/16" BASE

805035-PAIR
2-1/8" TALL, 1-5/8" BASE

HANDLES FOR STREAMWAY

803474 - SOLD IN PAIRS ONLY

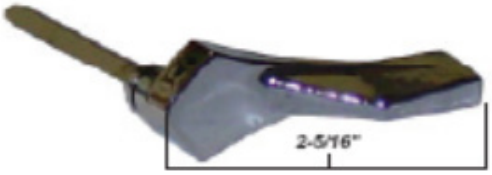

801256
DIVERTER VOLUME HANDLE

801260
S.L. LAV HANDLE T-TROL

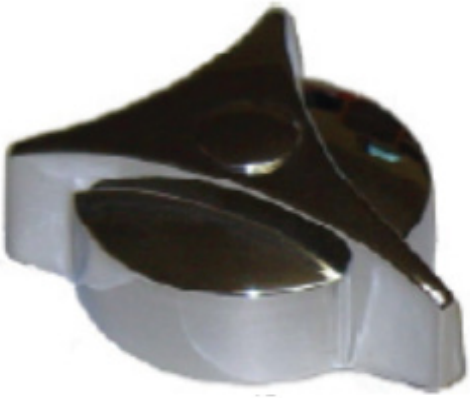

801252
T-TROL SHOWER HANDLE

HANDLES FOR SYMMONS

000724 - S.L. SHOWER HANDLE
1-1/4" TALL, 1-13/16" BASE

000538
S.L. KITCHEN FAUCET HANDLE

806670-For Temptrol & Levertrol Valves
Fits 801253 spindle assembly (3/8" Stem broach)

801882-For Safety Mix Valves
Fits 801265 spindle assembly (1/2" Stem broach)

HANDLES FOR UNION BRASS

801105 - SOLD IN PAIRS ONLY
TUB & SHOWER HANDLES

801160 - SOLD IN PAIRS ONLY
LAVATORY HANDLES

801135 - SOLD IN PAIRS ONLY
LAVATORY HANDLES
1=5/16" TALL, 1-3/8" BASE

801205-WITH "D" TYPE BROACH
808323-WITH SPLINED BROACH
TUB DIVERTER HANDLE

801110 - SOLD IN PAIRS ONLY
KITCHEN FAUCET HANDLES

HANDLES FOR VALLEY

801272 - SINGLE LEVER HANDLE

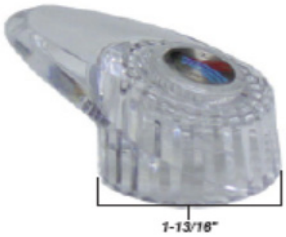

806141 - SINGLE LEVER ACRYLIC

804147 - SINGLE LEVER HANDLE

HANDLE FOR WATER SAVER

801272 - HANDLE ONLY 13/16" TALL
808240 - HOT INDEX ONLY
808241 -COLD INDEX ONLY

HANDLE FOR WOLVERINE

802102-PAIR
4" WRIST BLADE HANDLES
OLD STYLE (PICTURED)

HANDLES FOR ZURN

METERING VALVE HANDLES
809071 - HOT
809072 - COLD
806403 - PLAIN

806497 - 2-1/2" LEVER HANDLES

600118 - 4" WRIST BLADE HANDLES

SECTION THREE
FAUCETS AND COMPLETE FIXTURES
(RESIDENTIAL AND COMMERCIAL)

SINGLE LEVER LAVATORY FAUCET C.P. LEVER HANDLE WITH RED/BLUE INDEX MADE RIGHT INTO THE HANDLE. COMES WITH STAINLESS STEEL BALL AND USES DELTA REPLACEMENT PARTS.

607008- Less Pop Up
400270- Pop Up

SINGLE LEVER KITCHEN FAUCET LESS SPRAY. C.P. LEVER HANDLE WITH RED/BLUE INDEX MADE RIGHT INTO THE HANDLE. COMES WITH STAINLESS STEEL BALL AND USES DELTA REPLACEMENT PARTS.

607006

SINGLE LEVER KITCHEN FAUCET WITH SPRAY. C.P. LEVER HANDLE WITH RED/BLUE INDEX MADE RIGHT INTO THE HANDLE. COMES WITH STAINLESS STEEL BALL AND USES DELTA REPLACEMENT PARTS.

607007

TWO HANDLE LAVATORY FAUCET WITH ACRYLIC HANDLES. USES DELTA REPLACEMENT PARTS

607001- Less Pop Up
400270- Pop Up

TWO HANDLE KITCHEN FAUCET WITH ACRYLIC HANDLES. USES DELTA REPLACEMENT PARTS

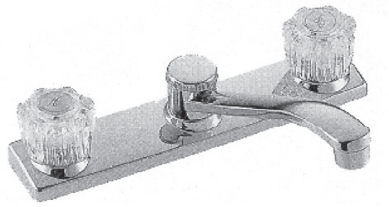

600060

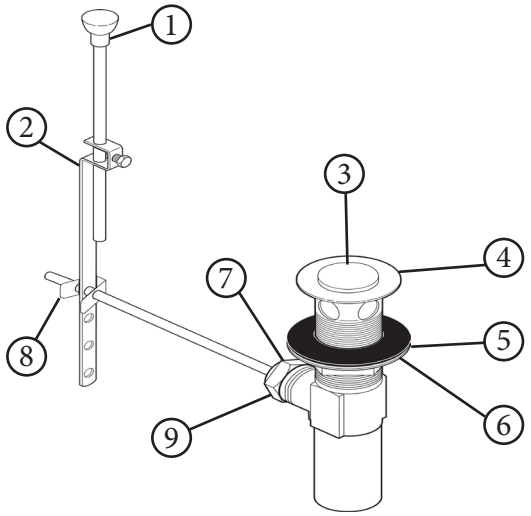

000820

1. **407300** - Upper Rod W/Knob - 7 3/4" Long
2. **400816** - Lower Rod W/Thumb Screw - 8" Long
3. **406934** - Pop Up Stopper
4. **407303** - Drain Flange Female Threads - 2" OD
5. **402142** - Basin Gasket
6. **402143** - Winged Lock Nut
7. **407301** - 7 1/4" Ball Rod with 5/8" Ball
8. **400820** - Spring Clip
9. **407302** - Ball Rod Nut With Wings

B&K TWO HANDLE FAUCET

607001- Acrylic Handles
600130- Metal Handles

B&K SINGLE HANDLE LAVATORY FAUCET (ADA APPROVED)

600085- Less Pop Up Drain
601770- With Pop Up Drain

B&K SINGLE HANDLE LAVATORY FAUCET WITH ACRYLIC HANDLE

602253

B&K TWO HANDLE LAVATORY FAUCET WITH HANDICAPPED HANDLES (ADA APPROVED)

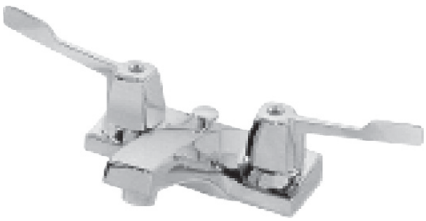

600046

600060- B&K Two Handle Kitchen Faucet Less Spray
600024- Same as above, Except w/ 4" Wrist Blade Handles

B&K TWO HANDLE KITCHEN FAUCET WITH SPRAY

600059

B&K SINGLE LEVER KITCHEN FAUCET WITHOUT SPRAY

600090

B&K SINGLE LEVER KITCHEN FAUCET WITH SPRAY

600058

B&K GOOSENECK LAVATORY FAUCET WITH HANDICAP HANDLES (ADA APPROVED) 4" CENTERS

600057- (Complete Faucet) w/ Swivel Gooseneck

WIDESPREAD LAVATORY FAUCET WITH ACRYLIC HANDLES SPREAD UP TO 12”

600142

SELF CLOSING SHOWER VALVE WITH 1/2” FIP INLET & OUTLET

600160

SELF-CLOSING SHOWER VALVE/ STRAIGHT VALVE WITH 1/2” FIP INLET AND OUTLET, ROYAL BRASS

407048

SELF-CLOSING SINGLE BASIN FAUCET W/BRASS BODY, C.P. 2.0GPM AERATOR, “H/C” INDEXES REPLACEABLE SEAT & STEM

602260

SELF-CLOSING DRINKING WATER BUBBLER W/BRASS BODY, C.P. VANDAL RESISTANT SCREWS FOR HANDLE AND ADJUSTING CAP & REPLACEABLE STEM, CAM & SPRING MECHANISM

807718

ECONOMY BASIN FAUCET

600005- Hot
600001- Cold

HEAVY BASIN FAUCET W/ AERATOR 1/2” SHANK & “H/C” INDEXES

602254

CHROME PLATED SINGLE SINK FAUCET WITH AERATOR OUTLET AND 1/2” MIP OUTLET. INCLUDES ADJUSTABLE FLANGE

600029

CHROME PLATED SINGLE SINK FAUCET WITH AERATOR OUTLET AND 1/2” MIP INLET

603447

CHROME PLATED SINGLE SINK FAUCET WITH MALE HOSE THREAD OUTLET AND 1/2” MIP INLET

605887

HEAVY DUTY WALL MOUNT SERVICE SINK FAUCET WITH 12” TUBULAR SPOUT

600525

SINGLE LEVER SHOWER VALVE WITH METAL HANDLE

600744- Tub & Shower

SHOWER VALVE WITH CHROME HANDLES

600125- 3 Handle
600536- 2 Handle

SINGLE LEVER, ACRYLIC HANDLE SHOWER VALVE

601578- Tub & Shower
600012- Shower Only

CENTRAL BRASS LAVATORY FAUCET WITH 4" CENTERS
2.2 GPM AERATOR

600146- Cast Brass Body

CENTRAL BRASS SLOW CLOSE LAVATORY FAUCET WITH 4" CENTERS, 2.0 GPM AERATOR

600215- Cast Brass Body

CENTRAL BRASS WIDESPREAD FAUCET FROM 6" TO 24" SPREAD W/ 2.2 GPM AERATOR

600538

CENTRAL BRASS WIDESPREAD FAUCET FROM 6" TO 24" SPREAD WITH 4" WRISTBLADE HANDLES
2.2 GPM AERATOR

008376

CENTRAL BRASS WIDESPREAD SLOW CLOSE FAUCET FROM 6" TO 24" SPREAD
2.2 GPM AERATOR

602251

CENTRAL BRASS KITCHEN FAUCET, 8" CENTERS WITH 8" TUBE SPOUT
2.2 GPM AERATOR
(Cast Brass Body)

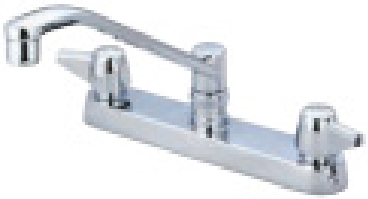

802187- No Hose Spray
802188- w/ Hose Spray

CENTRAL BRASS KITCHEN FAUCET, 6" CENTERS WITH 8" BRASS SPOUT
2.2 GPM AERATOR
(Cast Brass Body)

602245- w/ Hose Spray

CENTRAL BRASS BASIN FAUCET CAST BRASS, 1/2" NPS X 2-1/4" LONG SHANK

600148- Hot
600147- Cold
600459- Plain
600161- Plain Handle

(Hot & Cold Handles Are Available Upon Request)

CENTRAL BRASS SLOWCLOSE BASIN FAUCET
1/2" NPS SHANK X 2 1/4 LONG
2.2 GPM AERATOR

600220- Plain

CENTRAL BRASS DELUXE SLOW-CLOSE BASIN FAUCET WITH 1/2" NPS SHANK X 2-1/2" LONG WITH VANDAL RESISTANT
0.5 GPM FLOW RESTRICTOR

802185- Hot
600505- Plain

CENTRAL BRASS SELF CLOSING CAST BRASS BASIN FAUCET WITH 1/2" NPS X 2-1/4" LONG SHANK

600149- Hot
600150- ColdW

CENTRAL BRASS SINGLE BAR FAUCET WITH 1/2" NPS X 1-7/8" SHANK 2.2 GPM AERATOR **600151**	CENTRAL BRASS WALL MOUNT FAUCET, 1/2" NPS FEMALE THREADED INLET W/GARDEN HOSE THREAD OUTLET, WITH PLAIN HANDLE **602235**	CENTRAL BRASS SELF-CLOSING STOP WITH 1/2" NPS FEMALE THREADS **401462**
CENTRAL BRASS SELF CLOSING ANGLE STOP WITH 1/2" NPS FEMALE THREADS **401463**	CENTRAL BRASS SLOW-CLOSING STRAIGHT STOP WITH 1/2" NPS FEMALE THREADS **401464**	CENTRAL BRASS SERVICE SINK FAUCET HEAVY DUTY, CAST BRASS 1/2" NPS FEMALE INLET FLANGES ON 8" CENTERS HOSE THREAD OUTLET **600537**
CENTRAL BRASS DRINKING FAUCET CAST BRASS, SELF-CLOSING LEVER HANDLE, 1/2 NPS MALE SHANK **600153**	CENTRAL BRASS DRINKING FAUCET, CAST BRASS, SELF-CLOSING, 3/8 NPS FEMALE INLET **602236**	CENTRAL BRASS DRINKING FOUNTAIN HEAD, CAST BRASS WITH 3/8" NPS FEMALE THREADED INLET **600154**
CENTRAL BRASS SHAMPOO FITTING ON 3-3/8" CENTERS WITH 1/2 NPS SHANKS X 1-7/8" LONG AND 35 DEGREE BOTTOM OUTLET SUPPLY TUBE **000464**		

SERVICE SINK FAUCET WITH 4" - 8" ADJUSTABLE CENTERS, BRACE, PALE HOOK, ROUGH CHROME. **602243**	SINGLE SINK FAUCET WITH 1/2" FLANGED FEMALE INLET, HOSE THREAD OUTLET, C.P. BRASS **000125**	STRAIGHT VALVE WITH CROSS HANDLE, 1/2" FIP X 1/2" FIP, C.P. BRASS **600235**
STRAIGHT VALVE WITH CROSS HANDLE, 3/4" X 3/4" FIP, C.P. BRASS **600240**	PRE-RINSE VALVE, SELF-CLOSING, INSULATED HANDLE WITH HOLD DOWN RING AND RUBBER BOUND SPRAY HEAD INLET, 3/8" INLET **803697**	SELF-CLOSING PRE-RINSE VALVE WITH INSULATED HANDLE, HOLD DOWN RING AND RUBBER BOUND SPRAY HEAD. 3/8" FEMALE INLET AND AERATOR OUTLET **601156**
BEDPAN CLEANER WITH INSULATED HANDLE, STOP VALVE WITH PUSH LEVER HANDLE, ANGLED NOZZLE **800172**	RETRACTABLE HOSE REEL WITH 3/8"I.D. x 35' RUBBER HOSE, 3/8" INLET ON REEL, HOSE BUMPER 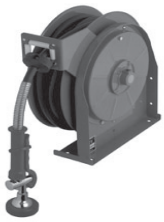 **000837**	HOSPITAL DOUBLE PEDAL VALVE WITH TWO 1/2" FIP INLETS, ONE 3/8" OUTLET. C.P. BRASS **000635**
DOUBLE PEDAL VALVE WITH 14" LONG PEDALS, WALL MOUNT, TWO 3/8" FIP INLETS AND ONE 3/8" FIP OUTLET, 2-1/2" CENTERS **808844**	WALL MOUNT LEG OPERATED VALVE WITH STRAIGHT STOPS, WHITE ALUMINUM WALL BRACKET, 1.6 GPM FLOW CONTROL AT ANY PRESSURE **SUPPLY PIPING NOT INCLUDED** **000793**	DECK MOUNT GOOSENECK SPOUT, C.P. BRASS, 1/2" FLANGED FEMALE INLET, SPOUT BASE, 2.0 @ 80 PSI **000636**
GOOSENECK FAUCET WITH WRIST BLADE HANDLES **600140**		

S/L LAVATORY FAUCET WITH STRAIGHT COPPER SUPPLY TUBES **602545**	METERING FAUCET 2 HANDLE ON 4” CENTERS **603442**	LAVATORY FAUCET SINGLE LEVER LESS POP-UP **603595**
TWO HANDLE LAVATORY FAUCET **604700**	KITCHEN FAUCET WITH FITTINGS. NO SPRAY **603114**	SINGLE LEVER LAVATORY FAUCET WITH METAL POP-UP **606662**
S/L LAVATORY FAUCET WITH 1/2” IPS CONNECTION. LESS POP UP HOLE **600650**		

DOUBLE PANTRY FAUCET

606800 - 13" high- deck to top of ridgid gooseneck(120x). tip of nozzle to deck 8". 6" spread. Lever handles. Shank 1-1/8" diameter. 1/4" IPS union type tailpieces on 4" centers.
600045 - Same as 606800 but with swivel gooseneck(133x). 12" deck to top. 8" deck to tip.

DOUBLE PANTRY FAUCET WITH SWING NOZZLE

606801 - 18" swing nozzle (65x). Lever handles. 1-1/8" diameter shank. 1/4" IPS union type tailpieces on 4" centers.
600035 - with 12" nozzle
601450 - with 6" nozzle

DOUBLE PANTRY FAUCET WITH DOUBLE-JOINT SWING NOZZLE

606802 - 18" long fully extended (68x). Lever handles. 1-1/8" diameter shank, 1/4" union type IPS tailpieces on 4" centers.
606803 - with 15" nozzle (67x)
606804 - with 12" nozzle (66x)

SINGLE PANTRY FAUCET WITH SWING NOZZLE

606805 - 18" swing nozzle. Single shank with 1/2" NPS thread. 1/4" IPS union type tailpiece. Lever handle, "C" or "H".
606806 - with 12" nozzle
606807 - with 6" nozzle

DECK MIXING FAUCET WITH GOOSENECK

002300 - 12-3/4" high - deck to top of ridgid gooseneck (120x). 7-3/4" tip of nozzle to deck. 6" spread. Lever handles. 8" centers on deck faucet with 1/2" IPS eccentric flanged female inlets.
606812- With swivel gooseneck 11-3/4" deck to top of gooseneck. 7-3/4" deck to top
604001 - BODY ONLY

DECK MIXING FAUCET WITH SWING NOZZLE

606816 - 18" swing nozzle (65x). 8" centers on deck faucet with 1/2" IPS eccentric flanged female inlets. Lever handles.
600030 - with 12" nozzle
606817 - with 6" nozzle
604002 -BODY ONLY

SINK MIXING FAUCET

600805 - 6" swing nozzle with aerator and soap dish on 8" centers. 1/2" IPS eccentric female inlets. Lever handles. Longer length nozzle available on request.

COMBINATION SINK FAUCET WITH DOUBLE JOINT SWING NOZZLE

600811 - 18" long fully extended (68x). 1/2" IPS eccentric flanged female inlets on 8" centers. Lever handles.
600812 - with 15" Double Jointed nozzle.
600813 - with 12" Double Jointed nozzle.

SINGLE SINK FAUCET WITH GOOSENECK

600820 - 10-1/4" high from center of faucet to top of rigid gooseneck (120x) and 5-3/4" to tip of nozzle. 6" spread. 1/2" IPS flanged female inlet. Four arm handle, "C" (or "H").

DECK MIXING FAUCET WITH SWING NOZZLE

600115- 12” Swing nozzle (62x). 4” centers with 1/2” IPS eccentric flanged female inlets. Lever handles.
600835- 10” Swing nozzle
600836- 8” Swing nozzle
600837- 6” Swing nozzle

DECK MIXING FAUCET WITH GOOSENECK

600201- 11 3/4” gooseneck. Lever handles. 4” centers with 1/2” IPS eccentric flanged female inlets. Swivel gooseneck.

SINGLE SINK FAUCET

600841- 1/2” IPS female inlet. 4” wall to center of spout. Four arm handle. “C” (or”H”).

SINGLE SINK FAUCET

600842 - 1/2” IPS female inlet. 4” wall to center of spout. Four arm handle. “C” (or”H”). 3/4” hose outlet.

SELF-CLOSING SINGLE SINK FAUCET

600845 - 1/2” IPS female inlet. 4” wall to center of spout. Four arm handle. “C” (or”H”). Self-closing valve.

SELF-CLOSING SINGLE SINK FAUCET

600847 - 1/2” IPS male inlet. 4” wall to center of spout. Four arm handle. “C” (or”H”) self-closing valve.

SINGLE BASIN FAUCET

600848 - 1/2” NPS thread, 1/4” IPS union type tailpiece. 3” center of faucet to center of spout. Spout is 1-1/4” above deck. Four arm handle. “C” (or”H”).

SINGLE BASIN FAUCET

600849 - 1/2” NPS thread, 1/4” IPS union type tailpiece. 3” center of faucet to center of spout. Spout is 1-1/4” above deck. Four arm handle. “C” (or”H”). Self-closing valve.

SINGLE SINK FAUCET

600852 - 1/2” IPS male inlet with adjustable flange. 6” inlet to center of outlet. Four arm handle, “C” (or”H”).

SERVICE SINK FAUCET

600855 - Bottom brace. Pail hook on nozzle. 4-1/8” clearance wall to back of faucet. 1/2” IPS eccentric female inlets on 8” centers.
600856 - with integral stops

SERVICE SINK FAUCET

600062 - Vacuum breaker nozzle with 3/4” hose thread on outlet. 1/2” IPS female inlets with integral stops with flanges. Inlets adjustable from 2-1/4” to 8-1/4” centers. Lever handles.
600862 - less integral stops

SERVICE SINK FAUCET

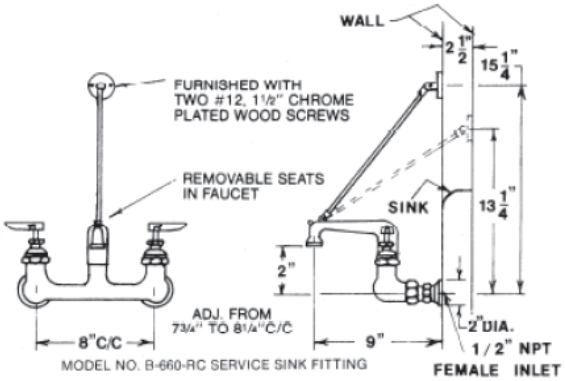

600859 - Top brace, pail hook on nozzle. 9” from back of inlet to center of outlet. Adjustable brace. 1/2” IPS eccentric female inlets on 8” centers.
600860 - With integral stops.

SERVICE SINK FAUCET

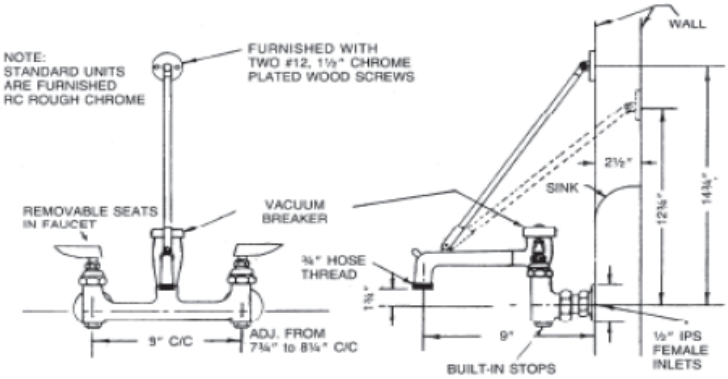

600861 - Heavy duty assembly with bottom brace. Vacuum breaker nozzle with pail hook and 3/4” hose thread on outlet. 1/2” IPS eccentric female inlets on 8” centers. Built in stops.

SERVICE SINK FAUCET

600002 - Heavy duty pail hook on nozzle. 1/2" IPS eccentric female inlets on 8" centers.
600065 - With 3/4" hose thread on outlet.

SERVICE SINK FAUCET

600064 - Heavy duty pail hook on nozzle. Nozzle has inline vacuum breaker. 1/2" IPS eccentric female inlets on 8" centers.

SERVICE SINK FAUCET

Faucet with built in screw driver stops and spring check stems. With vacuum breaker and 3/4" male hose thread outlet.
606145 - Rough Chrome
603230 - Polished Chrome
SPRING CHECK STEMS PREVENT CROSS FEED.

SERVICE SINK VACUUM BREAKER

800982 - 1/2" Vacuum breaker only.
- 3/8" Vacuum breaker & repair kit.
800102 - Vacuum breaker kit only.

SLOW SELF-CLOSING FAUCET

608202 - Push button with adjustable timed flow. Vandal resistant 1/2" NPS threaded shank, Fits sinks up to 1-3/8" thick. 1/2" O.D. slip inlet. Outlet 2" above deck.
Specify hot, cold or blank

LAVATORY FAUCET

600186 - Cast basin spout - 5" long. Lever handles. Fits sinks up to 1-1/4" thick. Adjustable centers (minimum 6-1/2") furnished as standard for 8" centers. 1/2" O.D. slip inlets.
608223 - with four arm handles.

LAVATORY FAUCET

608220 - Rigid gooseneck. 6" spread (120x). Lever handles. Fits sinks up to 1-1/4" thick. Adjustable centers (minimum 6-1/2") - furnished as standard for 8" centers. 1/2" O.D. slip inlets.
600200 - With swivel gooseneck (133x).

LAVATORY FAUCET WITH POP-UP

608225 - Cast basin spout 3-3/4" long. Fits sinks up to 1-1/4" thick. Adjustable centers (minimum 6-1/2"). Furnished as standard for 8" centers. 1/2" O.D. slip inlets. Pop-up waste with 1-1/4" diameter 17 gauge tailpiece.
608751 - Less pop-up.

CENTER SET LAVATORY FAUCET

600041 - 4" centers with 1/2" O.D. slip inlets. Fits sinks up to 1-3/8" thick. 1/2" NPS thread on shanks with 15/16" diameter top shoulder. 119x rigid gooseneck.

DECK MIXING FAUCET WITH 12" SPOUT

600115

DOUBLE PANTRY FAUCET

602230- Base Unit for Swivel Spout
805200- Base Unit for Rigid Spout

DECK MOUNTED FAUCET WITH SWING NOZZLE 3-1/2" CENTERS

600092- with 6" Swing Nozzle
600051- Complete Body - Less Spout

BACK MOUNTED WORKBOARD FAUCET WITH SWING NOZZLE. 8" CENTERS

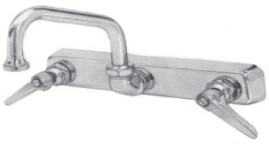

601581- Complete Unit w/ Handles - Less Spout
601580- with 12" Nozzle

BACK MOUNTED FAUCET 3-1/2" CENTERS

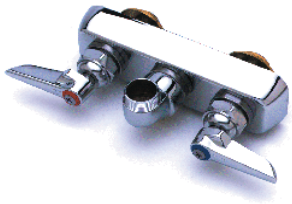

601582- Complete Body w/ Handles - Less Spout

WORKBOARD FAUCET W/ SWING NOZZLE FOR DECK MOUNTING 4" CENTERS

600091- Complete Unit w/ 6" Swing Nozzle
600026- with 12" Spout

DECK MOUNTED WORKBOARD FAUCET WITH SWING NOZZLE 8" CENTERS

000454- with 6" Nozzle

MEDICAL LAVATORY FAUCET

600044- 5-1/2" Spread Rigid Gooseneck. 8" Centers
600185- with Aerator 406996
600187- with 12" Centers

MEDICAL LAVATORY FAUCET

603347- 5-1/2" Spread Rigid Gooseneck. 8" Centers
600096- with 5-11/16" Spread Swivel Gooseneck

SURGICAL SINK FAUCET

000595- 5-1/42 Spread Rigid Gooseneck. 8" Centers. 4" Wrist Action Handles.

MEDICAL LAVATORY FAUCET

603971- 3-3/4" Cast Basin Spout 4" Wrist Action Handles

MEDICAL LAVATORY FAUCET

603971- 3-3/4" Cast Basin Spout 4" Wrist Action Handles

POP-UP WASTE ASSEMBLY

608237- Cast Bronze Drain Body. fits Sinks w/ 1-7/16" to 1-3/4" Diameter Drain Hole.

WALL MOUNT MIXING FAUCET 8" CENTERS. LEVER HANDLES

001662- Ridgid Base
600490- Swivel Base

1-1/2" SHANK EXTENSION KIT

408147

SLEEVE, SWING

802631

SERVICE SINK FAUCET WITH BUILT IN SPRING CHECK STEMS 8" CENTERS

606145- Rough Chrome
603230- Polished Chrome

SERVICE SINK FAUCET ROUGH CHROME 8" CENTERS

600064

SERVICE SINK FAUCET 8" CENTERS

600002

SERVICE SINK FAUCET 8" CENTERS

600857- Less Integral Stops
600858- With Integral Stops

DECK MOUNT FAUCET WITH 6" SPOUT 8" CENTERS

000454

DECK MIXING FAUCET WITH 12" SWING SPOUT 8" CENTERS

600030

WALL MOUNT SERVICE SINK FAUCET 8" CENTERS

600025- 12" Spout
600800- 18" Spout

SINGLE PANTRY FAUCET WITH RIGID 10" SPOUT

600101

SLOW SELF-CLOSING BASIN FAUCET

608200

FAUCET BODY ONLY SINGLE HOLE MOUNT

600100- For Use W/ Rigid Spout
609515- For Use W/ Swivel Spout

CENTER SET LAVATORY FAUCET 4" CENTERS

608228

WORKBOARD FAUCET 4 SPREAD - LESS NOZZLE 4" CENTERS

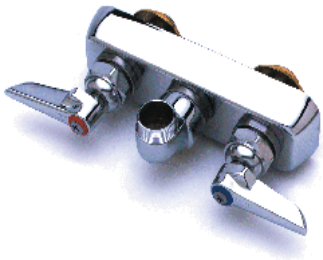

601145

WORKBOARD FAUCET LESS SPOUT

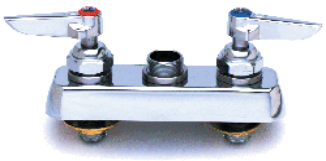

606173- 4" Centers
600051- 3-1/2" Centers

WORK BOARD FAUCET W/ 6" SPOUT - 4" CENTERS

600091

WORKBOARD FAUCET LESS SPOUT - 8" CENTERS

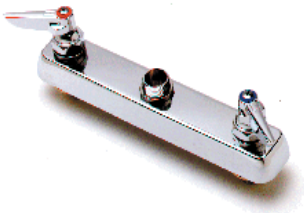

603998

SILL FAUCET WITH VACUUM BREAKER

606145- 3/4" Garden Hose Outlet W/ Atmospheric Vacuum Breaker. 1/2" IPS Female Flanged Inlet, Controlled By Key Or Screwdriver Slot.

PRE-RINSE UNIT WITH SWIVEL GOOSENECK

608333 - Deck type faucet with 1/4" IPS tailpiece connections on 4" centers. 39" above sink top. Gooseneck reaches 12" over sink.
608334 - 18" gooseneck length. 44" above sink top.

PRE-RINSE UNIT WITH SWIVEL GOOSENECK

000684 - Pre rinse unit with mixing faucet. 8" centers with 1/2" IPS female eccentric flanged union inlets. Spring action gooseneck. 34" high with 15" overhang.
608339 - with overhead swivel gooseneck, hose and spray as on 608333
608341 - with "roto-flex" design
608340 - with overhead swivel gooseneck, hose and spray as on 608333

PRE-RINSE UNIT WITH SWIVEL GOOSENECK

608335 - 8" center deck mounted faucet with union couplings connections. 1/2" IPS female eccentric flanged inlets. Spring action type gooseneck. Unit is 40" high with 15" overhang. 9" clearance.

PRE-RINSE UNIT WITH SWIVEL GOOSENECK

600027 - Built in spring checks. 1/4" IPS tailpiece connections on 4" centers. Spring action gooseneck. 40" high with 15" overhang.

PRE-RINSE UNIT WITH SWIVEL GOOSENECK

605119

PRE-RINSE HOSE WITH BACKFLOW PREVENTER

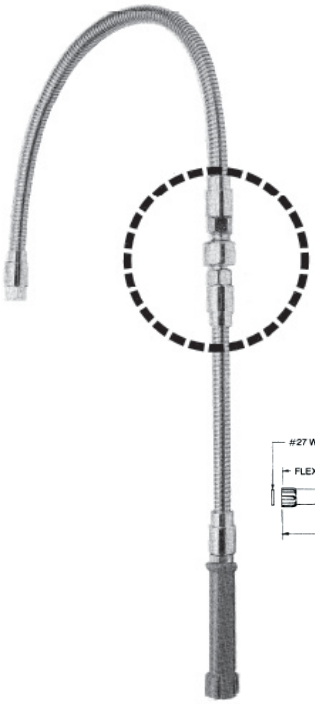

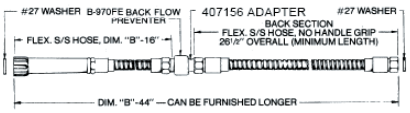

608351 - Flexible stainless steel hose with built in backflow preventer

ADD-ON FAUCET WITH SPOUT

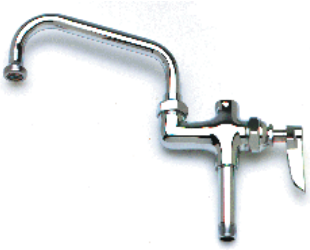

608352- 12" Nozzle
608353- 18" Nozzle

PRE-RINSE UNIT WITH SWIVEL GOOSENECK

608342

PRE-RINSE UNIT WITH SWIVEL GOOSENECK

805805- 6"
800847- 9"
800848- 12"

SINGLE BASIN MEETERING FAUCET

600157 - Plain
608701 - Hot **608702** - Cold

MEETERING LAVATORY FAUCET 4" CENTERS

600158

BUBBLER UNIT SELF-CLOSING W/ SHANK

603551

SINGLE BASIN FAUCET

604455

LAVATORY FAUCET 4" CENTERS WITH 4" WRIST BLADE HANDLES

609096

LAVATORY FAUCET 4" CENTERS WITH 2-1/2" LEVER HANDLES

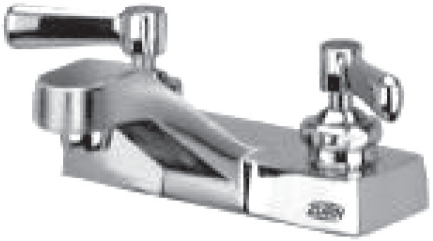

604459

DECK MOUNT FAUCET WITH 6" CAST BRASS SPOUT, 4" CENTERS WITH 2-1/2" LEVER HANDLES

609098

4" GOOSENECK FAUCET- 4" CENTERS WITH 2-1/2" LEVER HANDLES

609087

4" GOOSENECK FAUCET - 4" CENTERS WITH 4" WRISTBLADE HANDLES

603558

SERVICE SINK FAUCET WITH CAST BRASS 8" SPOUT ADUSTABLE 4" TO 8-3/8" CENTERS WITH 2-1/2" LEVER HANDLES

606054

SINGLE SENSOR LAVATORY FAUCET AND 4" COVER PLATE

609085 - With Mechanical Mixing Valve
609086 - Less Mixing Valve

MECHANICAL MIXING VALVE

409151 - Not ADA Approved

THERMIXER TEMPERING VALVE

603446 - ADA Approved

COVER PLATE

805441 - 4" Cover Plate
805442 - 8" Cover Plate

LABORATORY FAUCET SINGLE MOUNT W/ SHANK & GOOSENECK

609091

LABORATORY FAUCET SINGLE MOUNT W/ SHANK & VACUUM BREAKER

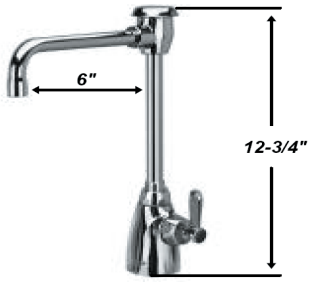

609092

DECK GOOSENECK FAUCET W/ 2-1/2" LEVER HANDLES 6-12" CENTERS

609095

DECK GOOSENECK FAUCET W/ 4" WRIST BLADE HANDLES 6-12" CENTERS

603557

SINK FAUCET, 8" CENTERS WALL MOUNT W/ 2-1/2" LEVER HANDLES. 9" TUBULAR SPOUT

609093

WIDESPREAD LAVATORY FAUCET W/ WRIST BLADE HANDLES 6-20" CENTERS

605104

WIDESPREAD FAUCET W/ 5" CAST SPOUT & LEVER HANDLES

605101

SINK FAUCET W/8" CENTERS WALL MOUNT W/ 2-1/2" LEVER HANDLES. 8" CAST SPOUT

609094

SERVICE SINK FAUCET W/ VACUUM BREAKER WALL MOUNT W/ADJ SHANKS 4 - 8-3/8" CENTERS. 2-1/2 LEVER HANDLES

BED PAN WASHER FAUCET W/VACUUM BREAKER, WALL MOUNT

DOUBLE FOOT PEDAL VALVE FLOOR MOUNT 1/2" FIP INLETS, 3/8" FIP OUTLET

609090

SERVICE SINK FAUCET W/ VACUUM BREAKER AND WALL BRACKET WALL MOUNT W/ 2-1/2" LEVER HANDLES

606154

PRE-RINSE UNIT. DECK MOUNT W/ 2-1/2" LEVER HANLDES & WALL BRACKET

609083

POT FILLER SELF CLOSING WITH INSULATED HANDLE

609081

HEAVY DUTY SINGLE LEVER LAVATORY FAUCET CHROME PLATED

608517

WALL MOUNT STAINLESS STEEL SINK 4" DOUBLE BOWL KITCHEN SINK WITH FOUR HOLES WITH 4 SPREAD BACKMOUNT FAUCET HEAVY GAUGE TYPE 304 STAINLESS, STEEL INCLUDES CLIPS (COMPLETE WITH FAUCET)

609098

DOUBLE BOWL KITCHEN SINK WITH FOUR HOLES 22 GAUGE TYPE 301 STAINLESS STEEL, INCLUDES CLIPS 6" DEEP, WITH 3-1/2" DRAIN HOLES

609098

SINGLE BOWL KITCHEN SINK WITH FOUR HOLES 22 GAUGE, INCLUDES CLIPS 6" DEEP, 3-1/2" DRAIN HOLE

609098

STAINLESS STEEL BAR SINK, 22 GAUGE, FOR USE WITH 4" CENTERSET FAUCET, 5-1/2" DEEP

609098

CUSTOM MADE STAINLESS STEEL SINKS MADE TO OEM FACTORY SPECIFICATIONS OR YOURS!

CALL US TODAY FOR A QUOTE ON YOUR STAINLESS STEEL SINK NEEDS AND SAVE BIG OFF OF OEM FACTORY PRICES!

CAST IRON SERVICE SINK

606002- 22” x 18”
606003- 24” x 20”

SERVICE SINK FAUCET WITH CROSS HANDLES

TRAP STANDARD

405232 - STRAINER AND STUD

405227- 2” TRAP
405228 - 3” TRAP

405230 - 1-1/2” N.O. PLUG WITH GASKET
405231 - TRAP NIPPLE WITH LOCKNUT
405229 - BASE PLATE

CAST IRON BOY WITH WHITE COATING
CHROME-PLATED BRASS STRAINER
FITS : AMERICAN STANDARD, KOHLER
ELJER AND CRANE CAST IRON SINKS

STRAINER FOR FLOOR MOP SINK

5-5/16” Diameter

408800

90° FAUCET SUPPLY KIT

401570

COMMERCIAL CAST IRON WALL HUNG LAVATORY SINK

ACID RESISTING ENAMEL ON CAST IRON
(INCLUDES WALL HANGER ON 8-1/2” CENTERS)

101031- 19” x 17”, 8” Centers
101032- 19” x 17”, 4” Centers
101032- 20” x 17”, 8” Centers
101032- 20” x 18”, 4” Centers

Flow Switch Alarm Systems

- Automatic, audible and visual alarm system
- Activates when unit is in use; preassembled
- Basic alarm meets NEMA 3 code (waterproof)
- Requires minimum of 2 GPM water to activate
- 1¼" NPT inlet piping

Standard Shower Alarms

S19-320
Shower/combination alarm with 6' cord (120 volt)
S19-320B
Shower/combination alarm with 6' cord and 120/24V AC transformer
S19-320C
Shower/combination alarm with 12' cord (120 volt)
S19-320E
Shower/combination alarm with 12' cord and 120/24V AC transformer

Standard Eyewash Alarms

S19-320A
½" NPT with 6' cord
S19-320D
½" NPT with 12' cord

Explosion-Proof Class 1 Division 1 Alarm Systems

S19-320EXP1A
Shower/combination alarm (120volt) rated Class 1; Division 1; Groups C and D explosion proof
S19-320EXP1B
Shower/combination alarm (220volt) rated Class 1; Division 1; Groups C and D explosion proof

Explosion-Proof Class 1 Division 2 Alarm Systems

S19-320EXP120
Shower/combination alarm (120 volt) rated Class 1 ; Division 2; Groups B, C, and D explosion proof
S19-320EXP220
Shower/combination alarm (220 volt) rated Class 1 ; Division 2; Groups B, C, and D explosion proof

S19-2000
8 GPM @ 30 PSI; accommodates up to three eyewashes or one eye/face wash

S19-2100
36 GPM @ 30 PSI; accommodates one combination shower with eyewash or multiple eyewashes

Cutaway View

S19-2200
67 GPM @ 30 PSI; accommodates up to two combination showers with eyewashes or multiple eyewashes

S19-2300
103 GPM @ 30 PSI; accommodates up to three combination showers with eyewashes or multiple eyewashes

FREEZE AND SCALD PROTECTION VALVES

Freeze protection valves completely open at 35°F (1.6°C) and closes at 45°F (7.2°C)
Scald protection valves completely open at 105°F (40.5°C) and closes at 85°F (29.4°C)

✔ **Combination units require both drench shower and eyewash protection valves.**

S45-1703
Freeze protection replacement valve for drench showers and eyewashes
S45-1702
Scald protection replacement valve for drench showers and eyewashes

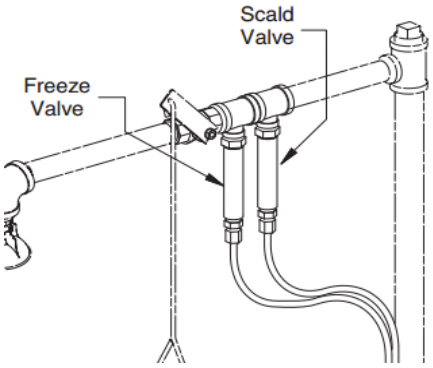

S45-1987
Freeze protection kit for drench showers; includes freeze protection valve, tee, nipples, compression fitting, ball valve, tubing, and cable tie
S45-1990
Scald protection kit for drench showers; includes scald protection valve, tee, nipples, compression fitting, ball valve, tubing, and cable tie

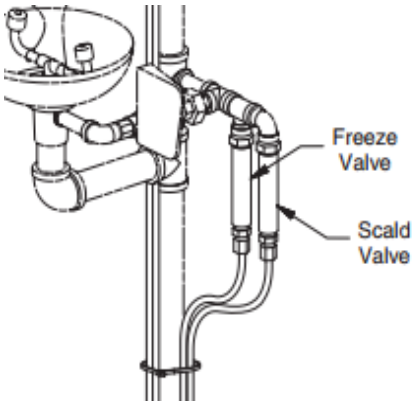

S45-1986
Freeze protection kit for eyewashes; includes freeze protection valve, tee, nipples, compression fitting, ball valve , tubing, and cable tie
S45-1989
Scald protection kit for eyewashes includes scald protection valve, tee, nipples, compression fitting, ball valve, tubing, and cable tie

Stem Assemblies, Spacers and Flow Restrictors

Sprayhead Assembly	Galvanized Fixture with Plastic Bowl	Galvanized Fixture with Stainless Steel Bowl	Standard Stainless Steel Fixture	316 Stainless Steel Fixture
Eyewash Only	S21-071 (stem) 113-1185 (stem spacer)	S21-071 (stem) 113-1159 (stem spacer)	S21-072(stem) 113-1159 (stem spacer)	S21-075(stem) 113-1159 (stem spacer)
Eye/Face Wash with Spray Ring	S21-073 (stem) 113-1185 (stem spacer)	S21-073 (stem) 113-1159 (stem spacer)	S21-074(stem) 113-1159(stem spacer)	None
Eye/Face Wash with Dual Black Heads	113-1150 (stem)	113-1150 (stem)	113-1151 (stem)	None

☑ Spacers 113-1159 and 113-1185 are required for units that shipped on or before 11/2/2005.

S21-071
Brass stem assembly with flow restrictor; for units with eyewash only
113-1150
Brass stem only; for units with dual black eye/face wash heads

S21-072
Stainless steel stem assembly w/ restrictor; for stainless steel units w/ eyewash only
S21-075
316 stainless steel stem assembly w/ flow restrictor; for 316 stainless steel units (w/ eyewash)
113-1151
Stainless steel stem only; for stainless steel units with dual black eye/face wash heads

S21-073
Brass stem assembly with flow restrictor; for units with eyewash and spray ring only

S21-074
Stainless steel stem assembly with flow restrictor; for stainless steel units with eyewash and spray ring only

S21-036 / S21-050
OBSOLETE

STEM SPACERS

113-1159
Stainless steel stem spacer; for use in units with stainless steel bowl

113-1185
Black plastic stem spacer; for use in units with yellow plastic bowl

EYEWASH AND EYE/FACE WASH FLOW RESTRICTORS

125-164
2.64 GPM yellow flow restrictor; for eyewash only-stem not included)

125-167
3.7 GPM pink flow restrictor; for eyewash with face spray ring only-stem not included

125-032
3.5 GPM black flow restrictor; for swing-activated and swing-down units

S45-572
Foot treadle and hardware kit (with 3-foot chain) for standard pedestal-mounted eyewashes and combination shower/eyewash units with hand operation; provides supplemental foot operation
S45-1314SS
Type 304 stainless steel foot treadle and hardware kit for stainless steel pedestal-mounted eyewashes and combination shower/eyewash units
S45-1314SS16
Type 316 stainless steel foot treadle and hardware kit for Type 316 stainless steel pedestal-mounted eyewashes and combination shower/eyewash units

S45-1544
Foot treadle and hardware kit (with 3½-foot chain) for European units with hand operation; provides supplemental foot operation

S39-395
Foot treadle and hardware kit for wall-mounted eyewashes with hand operation; provides supplemental foot operation

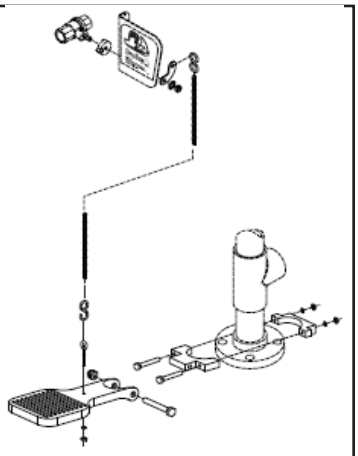

S45-620
Foot treadle and hardware kit for model S19-310 PVC combination drench shower and eyewash unit with hand operation; provides supplemental foot operation

S19-430EH
Drench hose spray kit with valve, drench hose sprayhead, hose, inspection tag and hardware. For use with eyewashes; provides a body water drench
S19-787
Replacement valve/drench hose sprayhead only
S27-265
Replacement valve only

S19-430SH
Drench hose spray kit with valve, drench hose sprayhead, hose, inspection tag and hardware. For use with drench showers; provides a body water drench
S19-787
Replacement valve/drench hose sprayhead only
S27-265
Replacement valve only

S89-002
8' thermoplastic hose; yellow
S89-003
6' stainless steel hose

269-053
12' thermoplastic hose; yellow

269-054
25' thermoplastic hose; yellow

140-226
Drenchhose guide bracket

S27-303
Dual-check backflow preventer compliant with ASSE 1024 & CSA B64.6 Watts Series 7

S45-2309
Dual-check vacuum breaker compliant with CSA B64.6 Watts Series 9

S45-2310
Dual-check backflow preventer compliant with ASSE 1012 Watts Series 9D; includes fittings for easy installation

S45-122-
Plastic eyewash handle with ½"NPT stay-open ball valve and hardware
S45-123-
Plastic eyewash handle with hardware
128-135-
Plastic eyewash handle only
S27-282-
Brass ½" NPT stay open ball valve only

S30-070-
Stainless steel eyewash handle with ½" NPT stay-open ball valve and hardware
S30-071-
Stainless steel eyewash handle with hardware
S08-336-
Stainless steel eyewash handle only
S27-282-
Brass ½" NPT stay-open ball valve only

S30-072-
For stainless steel hinged dust covers only. Stainless steel eyewash handle with ½" NPT stay-open ball valve and hardware
S30-087-
For stainless steel hinged dust covers only. Stainless steel eyewash handle with hardware
S27-282-
Brass ½" NPT stay-open ball valve only

S30-074-
For S19-270BL (left-hand) eyewash only. Stainless steel eyewash handle with ½"NPT stay-open ball valve and hardware
S30-075-
For S19-270BL (left-hand) eyewash only. Stainless steel eyewash handle with hardware
S27-282-
Brass ½" NPT stay-open ball valve only

S08-338-
For all-stainless steel units only. Stainless steel eyewash handle.

S27-287-
Stainless steel ½" NPT stay-open ball valve

S30-059-
Chrome-plated brass 1" NPT ball valve with lever
S27-278-
Chrome-plated brass 1" NPT ball valve only
S30-061 (not shown)
Stainless steel 1" NPT ball valve with lever
S27-276 (not shown)
Stainless steel 1" NPT ball valve only.

S19-0011-
Self-closing ball valve
NOTE: Self-closing ball valves are not ANSI Z358.1 compliant Appendix B3.
However an exception may be made in a school laboratory's situation.
Contact local authorities regarding specific application.

128-156A-
Drench shower handle for standard (non barrier-free) units (25 ½"x 9")
128-156B-
Drench shower handle for (non barrier-free) units (36"x 9")
128-156G-
Drench shower handle for heat trace units (27" x 9")

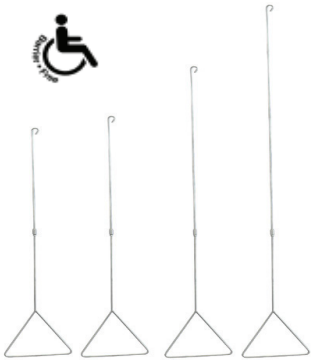

128-156D-
Drench shower handle (standard shipped with barrier-free showers) (45½" x 9")
128-156C-
Drench shower handle (48" x 9")
128-156E-
Drench shower handle (57" x 9")
128-156F-
Drench shower handle (69"x 9")

ONSITE WATER PRESERVATIVE KIT

• Includes replacement cap, three foam liners, one 8-oz. bottle of preservative, inspection tag

S19-899
269-1379- OnSite Water Foam Liner Perforated foam liner (sold individually)

WATER PRESERVATIVE

• Includes four 8-oz. bottles

S19-865

ONSITE HEATER JACKET RETROFIT KIT (PEDESTAL NOT INCLUDED)

• Protects against freezing down to -20°F (-29°C)
• Insulated heater jacket conceals a 121-watt heater
• Secondary thermostat prevents overheating if primary thermostat fails
• All UL-listed components; requires 120-volt AC

S19-921HR

ONSITE WASTE CART

• High-visibility yellow
• Captures used fluid; 56-gallon capacity
• Tapered sump, easy to drain

S19-399

EYEWASH SPRAYHEAD ASSEMBLY WITH SUPPLY STEM

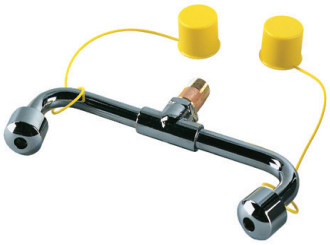

S19-399

EYE/FACE WASH SPRAY-HEAD ASSEMBLY WITH SUPPLY STEM

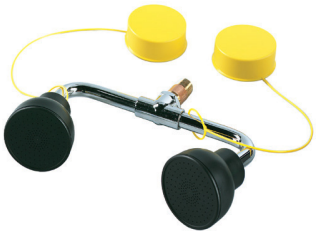

S19-399

EYE/FACE WASH SPRAYHEAD ASSEMBLY. STEM NOT INCLUDED

S19-399

EYE/FACE WASH (SPRAYHEAD ONLY; SOLD INDIVIDUALLY). INCLUDES 2.4 GPM FLOW CONTROL INSIDE EACH HEAD. TOTAL FLOW FROM DUAL HEADS IS 4.8 GPM

S19-399

EYEWASH AND SPRAY RING ASSEMBLY WITH SUPPLY STEM

S39-397

SPRAY RING ONLY; REQUIRES CROSS-CONNECTION YOKE FOR ATTACHMENT TO EYEWASH

S05-127

EYEWASH TEST GAUGE

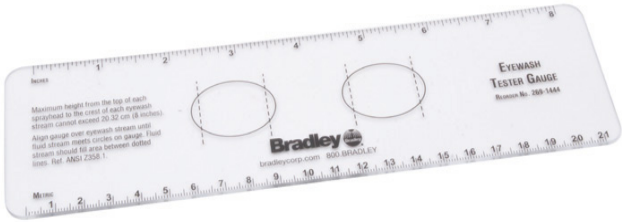

269-1444

PLASTIC SHROUD AND RING (SHOWERHEAD NOT INCLUDED)

S24-192

STAINLESS STEEL SHROUD AND RING (SHOWERHEAD NOT INCLUDED)

S24-193

PLASTIC SHOWERHEAD AND 1" DIAMETER 90° ELBOW

S24-194

STAINLESS STEEL SHOWERHEAD AND 1" DIAMETER 90° ELBOW

S24-200

PLASTIC SHROUD WITH RING, PLASTIC SHOWERHEAD AND 1" DIAMETER 90° ELBOW

S24-195

STAINLESS STEEL SHROUD WITH RING, PLASTIC SHOWERHEAD AND 1" DIAMETER 90° ELBOW

S24-196

PLASTIC SHOWERHEAD, WHITE STEEL IN-CEILING RECESSED SHOROUD ASSEMBLY, RING, COUPLING AND 1" DIAMETER 90° ELBOW

S24-202

RING ONLY

154-147

DRENCH SHOWER SIGN

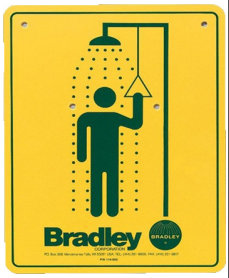

114-050

EYEWASH SIGN

114-051

COMBINATION DRENCH SHOWER AND EYEWASH SIGN

114-052

INSPECTION TAG (SOLD INDIVIDUALLY)

204-421

IMPACT-RESISTANT PLASTIC EYEWASH BOWL, 10" DIAMETER

154-058

CORROSION-RESISTANT STAINLES S STEEL BOWL, 10¾" DIAMETER

187-053

EYEWASH DUST CAPS ONLY (SOLD INDIVIDUALLY; TWO REQUIRED PER EYEWASH). YELLOW PLASTIC TETHER. APPROXIMATELY 1" X 1".

107-371

DUAL EYE/FACE WASH DUST CAPS ONLY (SOLD INDIVIDUALLY; TWO REQUIRED PER EYEWASH). BEADED CHAIN TETHER, 2¼"X 1".

S53-063

EYEWASH DUST CAP (SOLD INDIVIUALLY; TWO REQUIRED PER EYEWASH). BEADED CHAIN TETHER, 1" X 1".

S53-310

SAFETY YELLOW TOUCH-UP PAINT. 12-OZ. AEROSOL

269-964

3

RETROFIT DUST COVERS

For use with any Bradley plastic eyewash bowl.
Plastic bowl, dust cover, gasket and hardware

S45-1964

RETROFIT DUST COVERS

For use with any Bradley eyewash bowl. Stainless steel "clam shell" cover and bowl , stainless steel handle, tether and quick release pin

S45-2396

HEATER JACKET RETROFIT KITS FOR PORTABLE PRESSURIZED EYEWASH TANKS

Thermostatically controls water in weather conditions down to -10°F (-23°C); uses standard 120 VAC. Tanks (not included)

S19-671HR- (shown at right)
Heater jacket kit for 5-gallon tank

S19-690HR- (shown at left)
Heater jacket kit for 10-gallon tank

S27-788HR- (shown at center)
Heater jacket kit for 15-gallon tank

PRIVACY CURTAIN

S19-330

- Provides privacy to shower user in emergency situations
- Universal mounting
- 3-ply,vinyl laminate, curtian reinforced at top and bottom
- Chemical and mildew resistant; waterproof
- High-visibility yellow color
- Dimensions: 70"L x 145"W
- Stainless steel, corrosion resistant curtain rail and mounting brackets
- Rail dimensions: 1 ½" x 42 " diameter
- Not compatible with barrier-free, PVC and heat trace units contact Bradley for more information

DRENCH SHOWER TESTER

- Heavy-duty tester for required weekly activation
- Watertight funnel with weighted bottom
- 84" long with 8' telescoping aluminum handle
- Includes testing record card

S19-330ST

TRANSPORT CART FOR PRESSURIZED EYEWASH TANKS

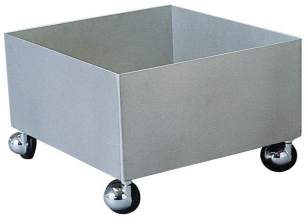

Four-wheel stainless steel transport cart. For use with eyewash tanks without heater jackets
(eyewash tanks not included)

S19-690A

ENCON EYEWASH STATIONS

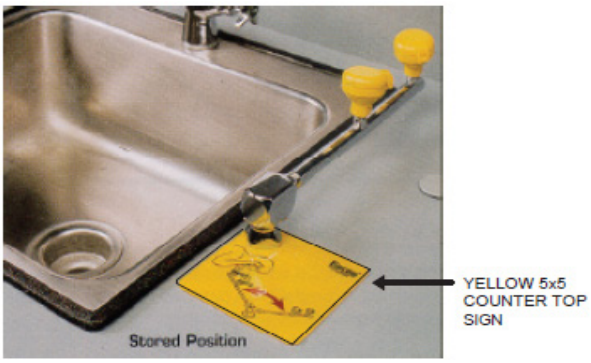

SPECIFICATIONS:

Description: Connects through countertops up to 1" thick with left or right mounting. Single motion activation for quick operation with positive stop. Vandal resistant pin. Eyewash sign included.

Piping: Polished Chrome Plaated Brass

Eyewash Head: Acetal plastic eyewash heads with flip top covers

Regulator: Self adjusting regulators assure a constant, even flow of 2.4 gpm

Supply: 1/2" NPT **Ship Weight:** 4 lbs.

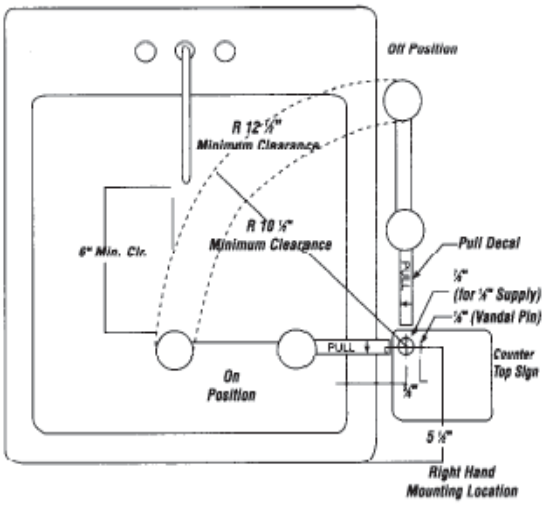

Installation Layout

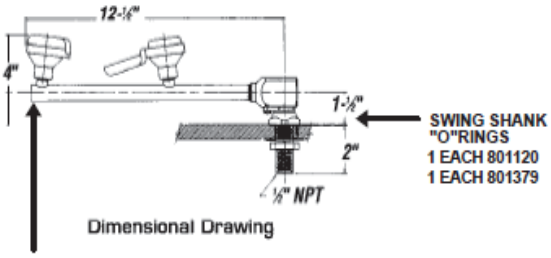

Dimensional Drawing

YELLOW PLASTIC
EYEWASH SPRAY
HEAD 941450

945622- Left Hand/Right Hand Unit w/ 12-1/2" Arm
945623- Same as Above(945622), but w/ 10-1/2" Arm

EYE-FACEWASH WITH STAINLESS STEEL BOWL, PEDESTAL MOUNT

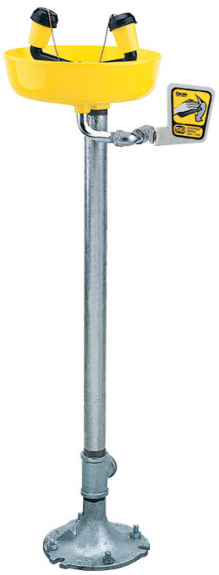

SPECIFICATIONS:

Piping: Chrome plated brass supply piping and hot dip galvanized pedestal mount/drain.

Valve: Chrome plated stay open ball valve with stainless steel push plate and actuation graphics.

Head and Bowl: ABS plastic heads and float off covers secured with stainless steel bead chain and stainless steel bowl.

Regulator: Self adjusting regulators assure a constant, even flow of 8.0 gpm under varying hydraulic conditions.

Supply: 1/2" NPT

Ship Weight: 11 lbs.

Waste: 1 1/4" NPT

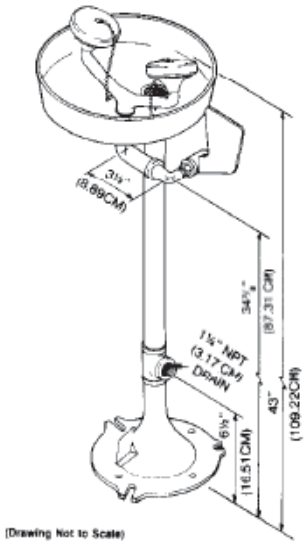

Dimensional Drawing

000976

EYE-FACEWASH WITH YELLO-BOWL™, WALL BRACKET

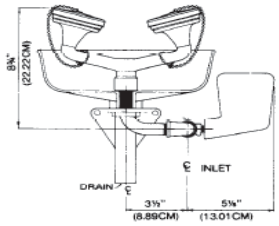

Dimensional Drawing

SPECIFICATIONS:

Piping and Valve: Chrome plated brass piping and stay open ball valve with stainless steel push plate and actuation graphics.

Head: ABS plastic dual stream heads, float off covers secured with stainless steel bead chain.

Bowl: High visibility ABS plastic Yello-Bowl™ with 7" wall bracket

Regulator: Self adjusting 8.0 gpm regulator assurees a constant, even flow under varying hydraulic conditions

Supply: 1/2" NPT

Ship Weight: 5 lbs.

Waste: 1 1/4" Tube Connection

Encon® SAFETY PRODUCTS

004332

EYE-FACEWASH WITH STAINLESS STEEL BOWL, WALL BRACKET

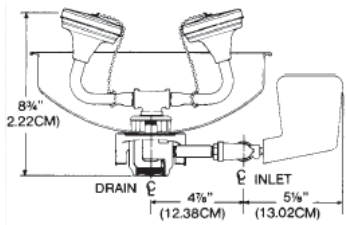

Dimensional Drawing

SPECIFICATIONS:

Piping and Valve: Chrome plated brass piping and stay open ball valve with stainless steel push plate and actuation graphics.

Head: ABS plastic dual stream heads, float off covers secured with stainless steel bead chain and chrome plated brass piping.

Bowl: Stainless steel bowl with 7 1/2" wall bracket.

Regulator: Self adjusting regulators assure a constant, even flow of 8.0 gpm under varying hydraulic conditions

Supply: 1/2" NPT

Ship Weight: 11 lbs.

Waste: 1 1/4" NPT

Encon® SAFETY PRODUCTS

004333

DRENCH HOSE- 6' HOSE W/ SELF CLOSING VALVE, SINK TOP FLANGE

Vacuum breaker available upon request

SPECIFICATIONS:

Description: Hand held single stream hose installed on sink/counter top area.

Valve: 3/8" chrome plated brass self closing squeeze valve with stay open locking handle and sing top mounting flange.

Head: Yellow ABS plastic single stream head and float off cover secured with stainless steel bead chain.

Hose: 6' synthetic rubber hose

Supply: 3/8" NPT

Ship Weight: 4 lbs.

Note: Single steam units do not satisfy ANSI Z358.1-1990 eyewash requirements and should only be used in support of primary eyewash equipment.

945800

DECK MOUNTED 90° SWIVEL EYE/FACE WASH

Outlet Head Assembly: two Fine Spray outlet heads mounted on chrome plated brass supply arms. Each outlet head has self-regulating flow control, filter to remove derbris from water and float-off dust cover.

Valve: ½" IPS chrome plated brass stay-open ball valve. Activated by epoxy-coated cast aluminum flag handle. Valve is made in USA.

Mounting: Unit mounts to countertop. Outlet heads swivel 90° from storage to operational position. Unit has positive stop to prevent head assembly from swinging more than 90°. Stop feature assures that, in an emergency, unit is easy to locate and handle will not be obscured.

Supply: ½" IPS male inlet. Furnished with locknut and washer for mounting to countertop

Sign: ANSI-compliant Identification sign.

Quality Assurance: Unit is completely assembled and water tested prior to shipping.

607899

607900- Mounting On Left Hand Side Of The Sink

WALL MOUNTED EYE WASH WITH PLASTIC BOWL

Outlet Head Assembly: two Gentile Spray outlet heads mounted on chrome plated brass supply arms. Each outlet head has self-regulating flow control, filter to remove derbris from water and float off dust cover.

Valve: ½" IPS chrome plated brass stay-open ball valve. Activated by epoxy-coated cast aluminum flag handle. Valve is made in USA.

Bowl: 12" safety orange ABS plastic.

Supply: ½" IPS female inlet

Waste: 1¼" IPS female outlet.

Sign: ANSI-compliant identification sign.

Quality Assurance: Unit is completely assembled and water tested prior to shipping.

607897

607898- Less Wall Mounting Bracket

DECK MOUNTED EYE WASH/DRENCH HOSE

Outlet Head Assembly: Two gentle spray outlet heads mounted side-by-side on chrome plated brass elbow fittings. Each outlet head has Self-regulating flow control, filter to remove derbris from water and float off dust cover.

Valve: Chrome plated forged brass squeeze valve activated by stainless steel lever handle. Valve haslocking clip which engages when handle is depressed, providing hands free operation. Valve stays open until locking clip is released. Valve is made in USA

Hose: 8' reinforced PVC hose. 300PSi maximum rated working pressure. Recommended pressure for unit is 80Psi maximum.

Mounting: Deck flange for countertop mounting. Flange has handle locator guide to assure that spray heads and handle face forward at all times.

Supply: 3/8" IPS male swivel-type inlet.
Sign: ANSI-compliant identification sign.

Quality Assurance: Unit is completely assembled and water tested prior to shipping.

607895

WALL MOUNTED WASH/DRENCH HOSE WITH STAY-OPEN BALL VALVE

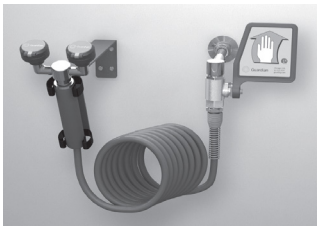

Outlet Head Assembly: two Gentile Spray outlet heads mounted on chrome plated brass supply arms. Each outlet head hasself-regulating flow control, filter to remove derbris from water and float off dust cover.

Valve: ½" IPS chrome plated brass stay-open ball valve. Activated by epoxy-coated cast aluminum flag handle. Valve is made in USA.

Hose: 12' nylon recoiling hose. 180 PSI maximum rated working pressure. Recommended pressure for unit is 80 PSI maximum.

Mounting: Epoxy coated angled bracket with spring clips to mount unit on wall. Bracket holds spray heads positioned for use.

Supply: 3/8" IPS female inlet

Sign: ANSI-compliant Identification sign.

Quality Assurance: Unit is completely assembled and water tested prior to shipping.

000464

607894- Drench hose only. Same as 607894 except with a single Fine Spray outlet head.

OUTLET HEADS

Outlet heads are mounted 5" apart deliver a soft, aerated flow of water. Heads angle forward and inward toward user. Angle of heads is adjustable to permit full coverage and avoid splashing. Furnished with float off dust covers to protect outlet heads.

000464

OUTLET HEADS

Outlet heads are mounted 3" apart deliver a soft, aerated flow of water. Heads angle forward toward user. Angle of heads is adjustable to permit full coverage and avoid splashing. Furnished with float off dust covers to protect outlet heads.

000464

WALL MOUNTED EYE WASH/ DRENCH HOSE

Outlet Head Assembly: Two gentle spray outlet heads mounted side-by-side on chrome plated brass elbow fittings. Each outlet head has self-regulatingflow control, filter to remove debris from water and float-off dust cover.

Valve: Chrome plated forged brass squeeze valve activated by stainless steel lever handle. Valve has locking clip which engages when handle is depressed, providing "hands free" operation. Valve stays open until locking clip is released. Valve is made in USA.

Hose: 8' reinforced PVC hose. 300 PSI maximum rated working pressure. Recommended pressure for unit is 80 PSI maximum.

Mounting: Epoxy coated bracket with spring clips to hold unit to wall. Clips assure that spray heads and handle face forward at all times.

Supply: 3/8" IPS male swivel-type inlet.

Sign: ANSI-compliant identification sign.W

Quality Assurance: Unit is completely assembled and water tested prior to shipping.

607893

EYE WASH & SHOWER SAFETY STATION

Shower Head: 10" safety orange ABS plastic.

Shower Valve: 1" IPS chrome plated brass stay-open ball valve furnished with stainless steel actuating arm and heavy duty aluminum pull rod. Valve is made in the USA

Eye Wash Outlet Head Assembly: Two gentle spray outlet heads mounted on chrome platedbrass supply arms.

Eye Wash Bowl: 12" safety orange ABS plastic. Eye Wash Valve: 1/2" IPS chrome plated brass stay-open ball valve. Activated by epoxy-coated cast aluminum flag handle. Valves made in the USA.

Pipe and FIttings: 1-1/4" IPS Schedule 40 ot-dipped galvanized steel; 9" aluminum floor flange.

Supply: 1-1/4" IPS female top or side inlet.
Waste: 1-1/4" IPS female outlet.
Sign: ANSI-compliant identification sign.

ADDITIONAL MODEL
607892
Same as **607891** except with stainless steel bowl in place of safety orange ABS plastic.

607891

EYE WASH/DRENCH STATION SUPPLY FITTING AND ADAPTOR

FOR EASY HOOK UP TO ANY CHROME PLATED 3/8" RISER LINE TO PROVIDE SUPPLY TO EYE WASH/DRENCH STATION UNITS

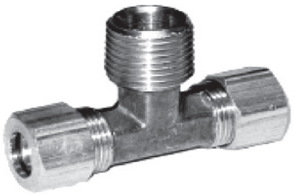

404759- 3/8" x 3/8" COMPRESSION TEE x 3/8" MIP OUTLET

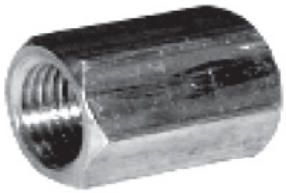

404758- 3/8" FIP x 3/8" FIP COUPLING

1/4" FULL SPRAY SPRAY HEAD ASSEMBLY - 2-1/4" DIAMETER

923501

1/4" GENTLE SPRAY SPRAY HEAD ASSEMBLY - 1-1/4" DIAMETER

923500

EYE WASH COVER WITH CHAIN

941451

EMERGENCY EYE WASH COVER YELLOW PVC

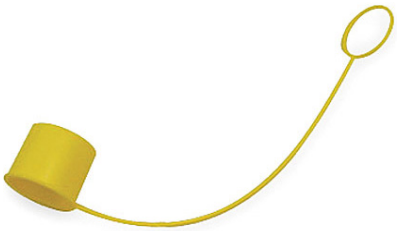

924502

FLANGE FOR DECK MOUNTED EYE WASH

600311

SHAMPOO VALVE UNIT SINGLE LEVER CONTROL **809771**	SHAMPOO FAUCET. 4” CENTERS 1/4” MIP CONNECTION **604401**	SHAMPOO FAUCET 3-3/8” CENTERS **000464**
SHAMPOO HOSE AND SPRAY HEAD ASSEMBLY **804708**	SHAMPOO RECIEVER UNIT WITH GASKET **005658**	

HALSEY TAYLOR ADA APPROVED WATERCOOLER **609046**	HALSEY TAYLOR FREE STANDING WATER COOLER **605124**	OASIS BOTTLE COOLER HOT N' COLD WATER STATION **603240**
HALSEY TAYLOR ADA APPROVED BI-LEVEL WATER COOLER **601200**		

SECTION FOUR
FLUSH VALVES
BEDPAN WASHERS &
REPAIR PARTS

4

ZURN COMMODE FLUSH VALVES

1-1/2" TAILPIECE

920305 - 3.5 GPF
920306 - 1.6 GPF
920649 - 1.6 GPF
(W/ TRIPLE BY-PASS)

ZURN URINAL FLUSH VALVES

3/4" TAILPIECE

920310 - 1.5 GPF
920307 - 1.0 GPF

ZURN AQUAVANTAGE AV

CONTACT YOUR ACS SALES REPRESENTATIVE FOR MORE INFORMATION ON THESE MODELS

Z6606AV

ZURN AQUAVANTAGE AV

CONTACT YOUR ACS SALES REPRESENTATIVE FOR MORE INFORMATION ON THESE MODELS

Z6603AV

ZURN METRO FLUSH CLOSET FLUSH VALVES

1-1/2" TAILPIECE

920328 - 1.6GPF
920329 - 3.5GPF

ZURN METRO FLUSH URINAL FLUSH VALVES

920358 - 1.5GPF

ZURN AUTOMATIC RETROFIT FLUSH VALVE HEAD UNIT

601235

ZURN COMMODE FLUSH VALVE HEAD ONLY

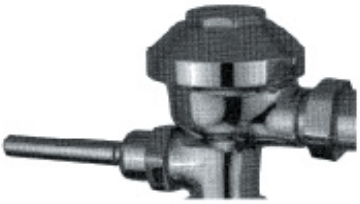

000914- Commode 3.5 GPF
000915 - Commode 1.6 GPF
003426 - Urinal 1.5 GPF
000918 - Urinal 1.0 GPF

SLOAN REGAL FLUSH VALVE

FOR URINALS

920516 - 3.5 GPF W/ 1-1/4" TAILPIECE
920517 - 1.5 GPF W/ 1-1/4" TAILPIECE

SLOAN REGAL FLUSH VALVE

1-1/2" TAILPIECE

921022 - 3.5 GPF
920663 - 1.6 GPF
920775 - 3.5 GPF (W/ ADJ. GROUND JOINT NIPPLE)

SLOAN REGAL FLUSH VALVE

921023 - 1.5 GPF W/3/4" TAILPIECE
920599 - 1.0 GPF W/3/4" TAILPIECE

COYNE DELANY FLUSH VALVES - FLUSH BOY

940046- 1-1/2" COVER NUT

940000- 1-1/2" SPUD COVER

COMPLETE STOP W/HEX CAP NUT
920615 - 1"
920117 - 3/4"

920158 - COMMODE VALVE 1" x 1-1/2" 1.6GPF
920161 - COMMODE VALVE 1" x 1-1/2" 3.5GPF
920832 - URINAL VALVE 1" x 1-1/4" 3.0GPF
920381 - URINAL VALVE 3/4" x 3/4" 1.0GPF

THERMIXER TEMPERING VALVE

GPF SET BY ADJUSTMENT SCREW UNDER TOP COVER

OPERATES DOWN TO 0 WATER PRESSURE!

920820 - COMMODE VALVE 1" x 1-1/2"
920835 - URINAL VALVE 1" x 1-1/4"
920825 - URINAL VALVE 3/4" x 3/4"

ZURN BEDPAN DIVERTER ASSEMBLY

943582

SLOAN BEDPAN DIVERTER UNIT LESS DEOSEPTIC BOTTLE

920318

ZURN BEDPAN DIVERTER

920315

AMERICAN STANDARD BEDPAN CLEANSER ASSEMBLY

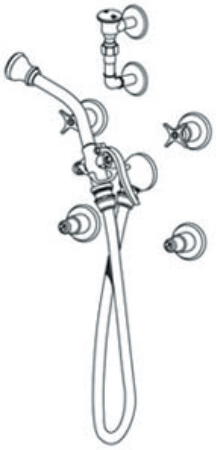

008871

AMERICAN STANDARD BEDPAN SPRAY UNIT WITH HOSE

606654

CHICAGO FAUCET BEDPAN WAND ONLY

800172

KOHLER BEDPAN WASHER COMPLETE UNIT

001701

SLOAN BEDPAN WASHER UNIT WITH 2” OFFSET

920341

COYNE & DELANY BEDPAN WASHER UNIT WITHOUT BOTTLE

920185

AMERICAN STANDARD BEDPAN SPRAY ARM ASSEMBLY

920042

COYNE & DELANY BEDPAN WASHER COMPLETE UNIT

922264

COYNE DELANY RETRO FLUSH VALVE SENSOR UNITS
(FISTS DELANY VALVES ONLY)

CLOSET
920993 - 4.5 GPF CLOSET
940999 - 3.5 GPF CLOSET
?????? - 1.6 GPF CLOSET

URINAL (1-1/4" TOP SPUD)
940999 - 3.5 GPF URINAL
?????? - 1.6 GPF URINAL

URINAL (3/4" TOP SPUD)
??????? - 1.0 GPF URINAL

IMPULSE RETRO-FIT KITS FOR DELANY FLUSHOMETERS
MODELS - I3003A-1.6, I3003A-3 AND I3003A

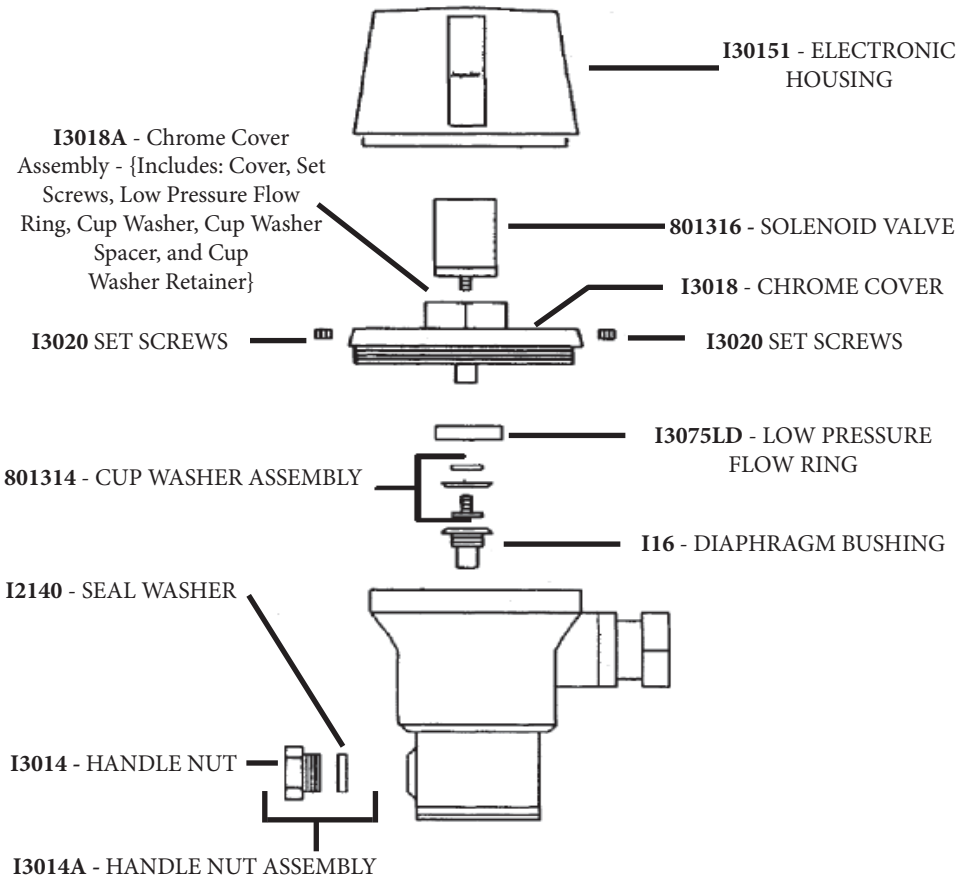

ZURN E-Z FLUSH RETRO FLUSH VALVE SENSOR UNITS

601235 -
RETROFITS TO ZURN AQUAVANTAGE & AQUAFLUSH FLUSH VALVES
RETROFITS TO SLOAN ROYAL AND REGAL FLUSH VALVES

*FOR URINAL OR CLOSET
*HANDS FREE OPERATION
*REDUCES MAINTENANCE
*ELIMINATES ODORS FROM UNFLUSHED FIXTURES
*3 MINUTE INSTALLATION
*COURTESY FLUSH BUTTON ON ALL UNITS
*WITH C.P. METAL COVER

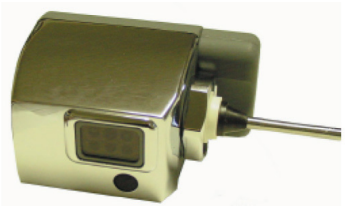

601236 -
RETROFITS TO DELANY CLOSET OR URINAL

920412 - ADAPTOR COUPLING NUT FOR COYNE DELANY & CRANE STOPS

DELANY FLUSHBOY (NEW BREAKDOWN) NEEDS NEW PART #'S

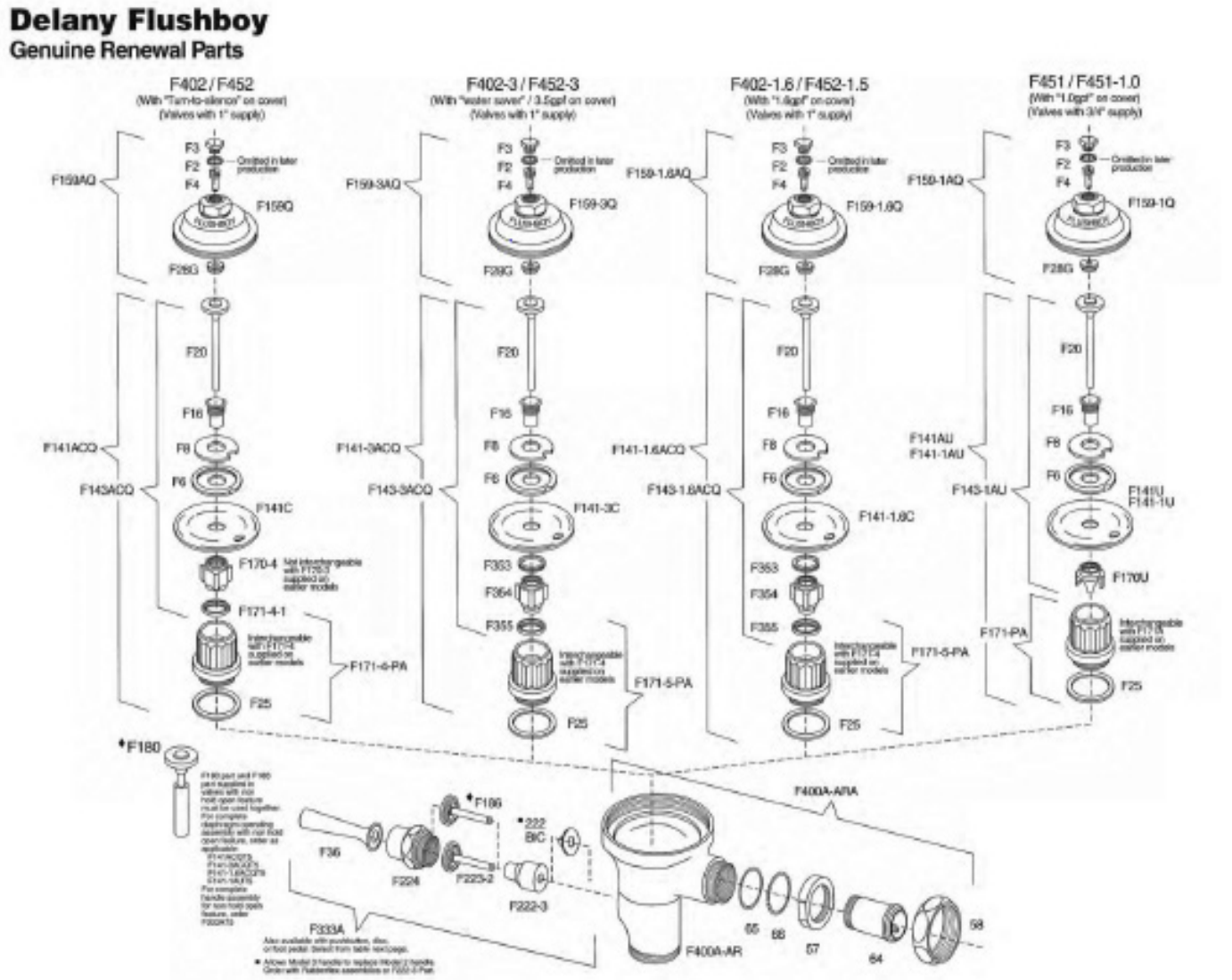

4

DELANY CONTROL STOP KITS

TURN-TO-SILENCE ANGLE OR STRAIGHT STOPS

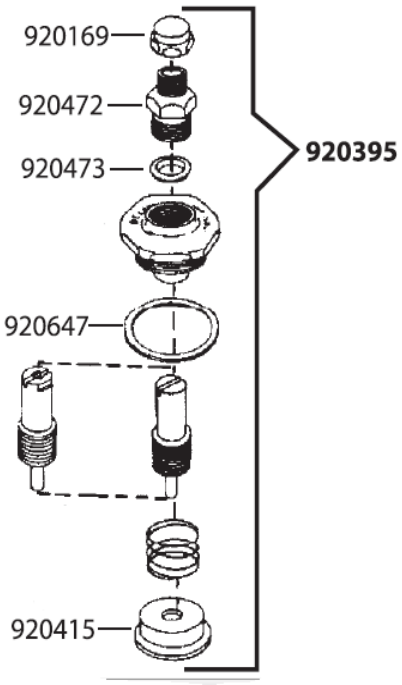

3/4" AND 1/2" ANGLE STOPS

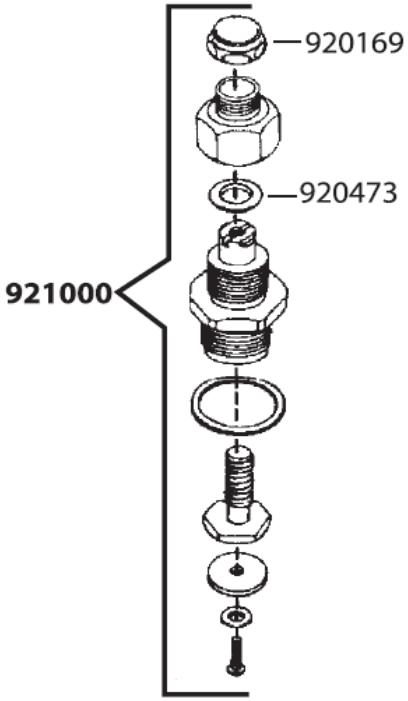

ANGLE OR STRAIGHT STOPS

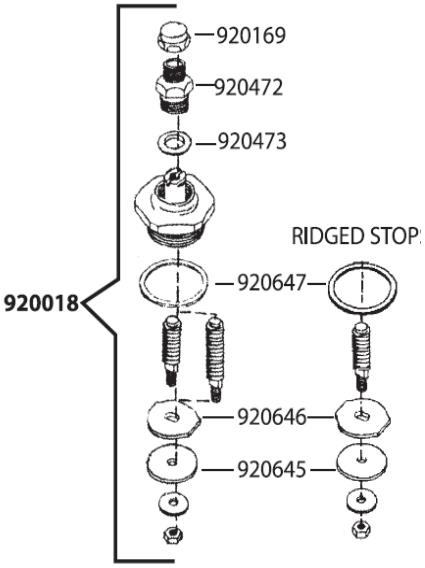

FLUSHBOY

Repair kits for-Flushboy, Coyne & Delany (Leather/Gen.)

920025 - Closet Kit
920020 - Urinal Kit

FLUSHBOY

Repair kits for-Flushboy, Coyne & Delany (Rubber/OEM)

920163 - Closet Kit
920164 - Urinal Kit

OPERATING STEMS

Replacements Available for Coyne & Delaney #F186, #F386, & #F223-2

920493 - 1-13/16" Stem, Gen.
920045 - 1-7/8" Stem, Gen. (Most Common)
921665 - 3-1/32" Stem, Gen.
808172 - 2-15/16" Stem, OEM

COWL NUT FOR VACUUM BREAKER TUBES

Fits Delany, Sloan, Toto & Zurn

920003

RUBBER FLEXER/GEN.

Replaces Coyne & Delaney #F222-3 For Flushboy

920035

VACUUM BREAKER INSERT

920040

DIAPHRAGM BUSHING

#F-16 For FLUSHBOY VALVES

920165 - OEM, PVC

AUXILIARY VALVE

920170 - OEM
920030 - OEM, F20
920449 - OEM F180 SLIDE PISTON TYPE BRASS STEM & STAINLESS SLIDE PISTON

STOP REPAIR KIT

921780

DELANY BED PAN ARM UNIT SKIP FOR RIGHT NOW

GRAY ENGINEERING BEDPAN UNIT

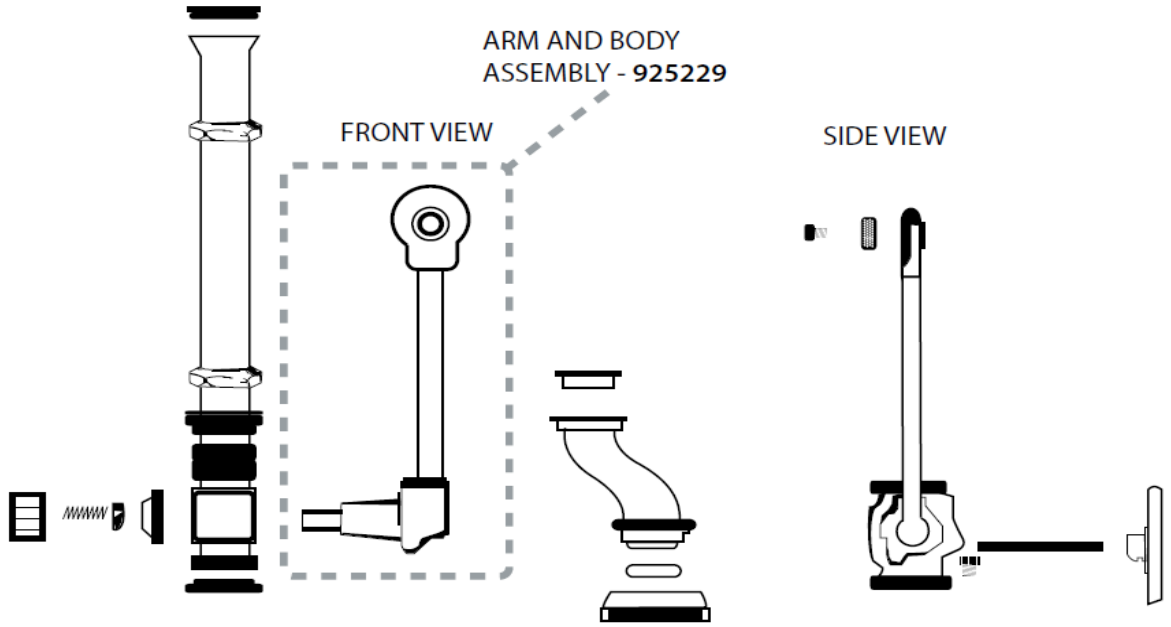

COMPLETE BEDPAN UNIT - **925228**

BEDPAD UNIT REPAIR KIT - 925230*

925230 REPAIR KIT CONTAINS:

1. ACORN NUT & SET SCREW
2. PLUG TENSION SPRING
3. NYLON WASHER
4. PLUG WASHER
5. COMPRESSION RING (WHITE PLASTIC WEDGE SHAPE)
6. SPRAY DISK
7. SPRAY DISK SCREW
8. POLY FLANGED WASHER (WHITE HAT SHAPED)
(TWO INCLUDED, ONE FOR ON TOP OF STRAIGHT TAILPIECE)
9. RUBBER WASHER (FOR BOTTOM OF LOWER OFFSET TAILPIECE)
10. VALVE LUBRICANT: 1oz TIN (NOT SHOWN)

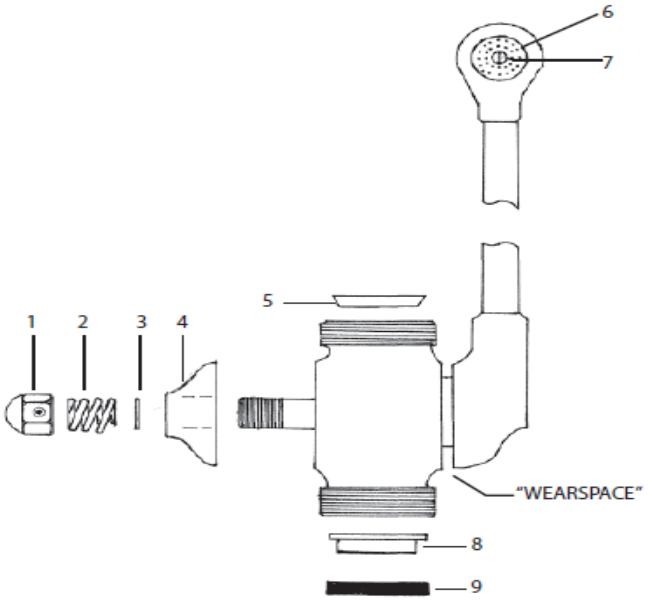

GRAY ENGINEERING BEDPAN UNIT

MANSFIELD STRAIGHT PATTERN URINAL FLUSH VALVE WITH PUSHBUTTON CONTROL

*1/2 FPS INLET x 3/8" FPS OUTLET

3/4" SPUD CONNECTOR NUT, FRICTION RING, RUBBER WASHER AND WHITE SPUD COVER
*1 QUART PER FLUSH

920032

MANSFIELD PUSH BUTTON CARTRIDGE FOR URINAL

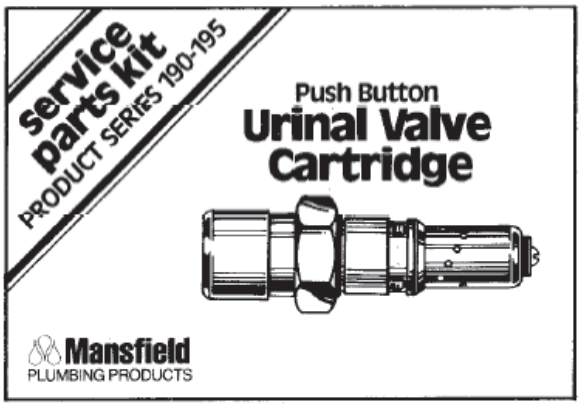

920240

MANSFIELD TORPEDO FLUSHOMETER VALVE COMPONENTS & PARTS

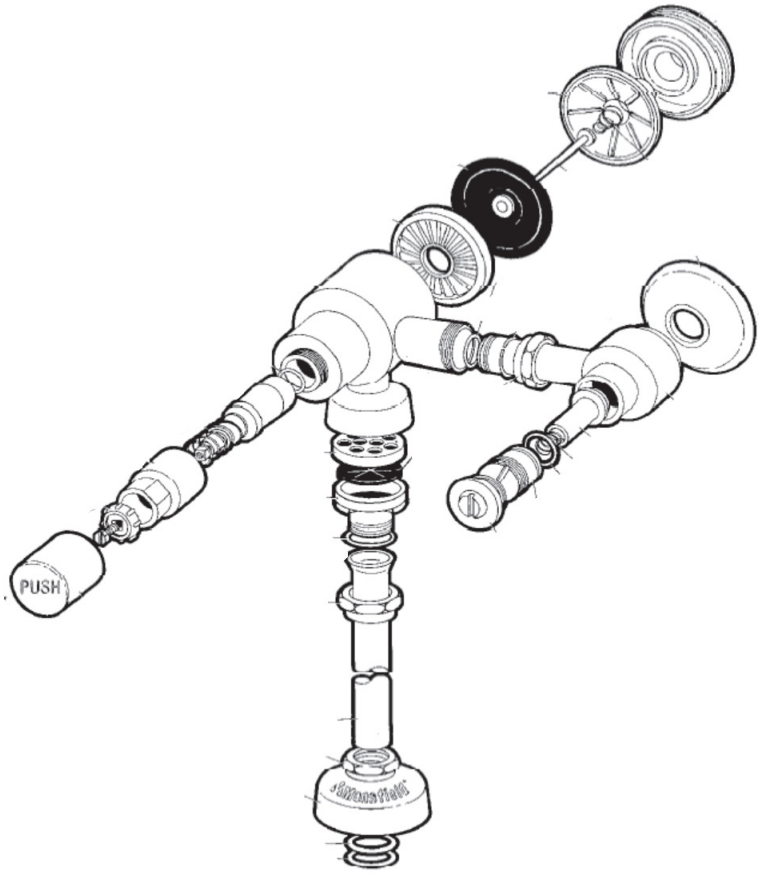

100315 - TIMER CARTRIDGE

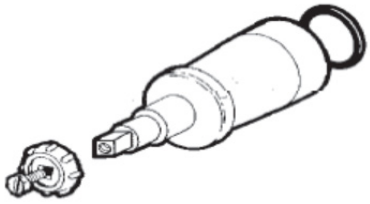

Model 1150 preset to 1-1/2 gallons
Replacement Kit Includes:
*timer cartridge assembly
*timer cartridge o-ring
*push button retainer
*push button screw

100316 - REPAIR KIT (5 PIECE)

Model 1075 & 1150 Repair Kits
Include:
*valve body diaphragm
*vacuum breaker diaphragm
*flow control check valve o-ring
*control pin & washer
*control pin spring

4

ORIGINAL SLOAN REPAIR "GUT DROP-IN" KITS

920371 - 4.5 GPF, COMMODE (A-36-A)
920505 - 3.5 GPF, COMMODE (A-38-A)
920847 - 1.6 GPF, COMMODE (A-41-A)
924014 - 2.4 GPF, CLOSET (A-1103-A)
920364 - 1.5 GPF, URINAL (A-37-A)
920661 - 1.0 GPF, URINAL (A-42-A)
924457 - 0.5 GPF, URINAL (A-43-A)

MASTER SLOAN REBUILD KIT

942125

KIT CONTAINS THE FOLLOWING:

200490 - O-RING PICK (1)
200495 - SLOAN SUPER WRENCH (1)
201106 - FLUSH VALVE TAIL PIECE (1)
700006 - STEM LUBE (1)
800792 - SLOAN CLOSET RELIEF VALVE (4)
800793 - DIAPHRAGM (NEW STYLE) (10)
800807 - GUIDE ONLY (4)
800809 - MOLDED DISC (20)
800812 - URINAL RELIEF VALVE (4)
802346 - O-RING (20)
802349 - LOCK-RING FOR FLUSH VALVE STOP TAIL PIECE (3)
805071 - HANDLE GASKET (6)
805667 - HYCAR SEAL (18)
805681 - REFILL HEAD (10)
805682 - FLOW RING (10)
920006 - VACUUM BREAKER (10)
920081 - SLOAN 1 STOP CAP VP (2)
920082 - SLOAN 3/4 STOP CAP VP (2)
920361 - SLOAN SCREWDRIVER REP (3)
920363 - SLOAN SCREWDRIVER REP (3)
920370 - HANDLE REPAIR KIT, PVC (6)
920551 - FLOW RING, TURBO FOR URINAL (6)
920855 - HANDLE ASSEM**BLY, NEW STYLE** STANDARD LENGTH (3)
924442 - RELIEF VALVE, LOW CONSUMPTION CLOSET/URINAL (4)
924444 - FLOW RING (6)
942105 - ADJ METAL DRAWER W/9 DIVIDERS

DROP-IN COMPONENT PARTS

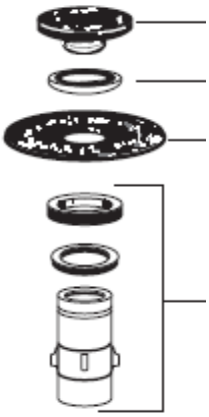

MOLDED DISC — **800797** - OEM SLOAN; **926443** - ZURN

COPPER RING — **920575**

DIAPHRAGM — **SLOAN**
800793 - NEW STYLE
800799 - OLD STYLE
ZURN
801803 - LIGHT BLUE

GUIDE ASSEMBLY
800791 - 4.5 GPF CLOSETS & 1.5 URINALS
920107 - 1.6 GPF CLOSETS
924445 - 1.0 GPF URINAL
920109 - 0.5 GPF URINAL

SLOAN VACUUM BREAKER - 920006

920362 - SLOAN FRICTION RING

HANDLE ASSEMBLY

920855 - OEM STANDARD LENGTH
921038 - OEM HANDICAPPED LENGTH
921005 - OEM WHITE, ANTI-MICROBIAL

CLOSET/URINAL DIAPHRAGM KIT (NEW STYLE)

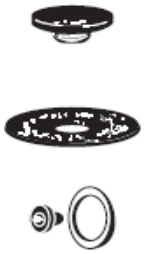

920366 (A-156-AA)

CLOSET/URINAL DIAPHRAGM KIT (OLD STYLE)

920365 (A-56-AA)

SPUD COUPLING ASSEMBLY

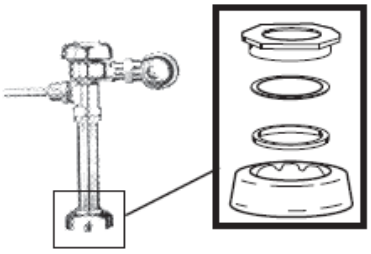

920295 - 3/4"
920320 - 1-1/4"
920325 - 1-1/2"

SLOAN HANDLE REPAIR KITS

—**805668** - PLUNGER
—**805665** - SPRING
—**805666** - PVC BUSHING
805667 - SEAL
—**920424** - BLUE, CHEMICAL RESISTANT SEAL
—**805071** - GASKET
920434 - BLUE, CHEMICAL RESISTANT SEAL

920370 - OEM, PVC
920554 - OEM, BRASS

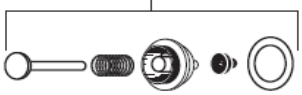

SLOAN

PIPE SUPPORT BRACKETS FOR:	
920371	4.5 GPF, COM-MODE (A-36-A)
920505	3.5 GPF, COM-MODE (A-38-A)
920847	1.6 GPF, COM-MODE (A-41-A)
920364	1.5 GPF, URINAL (A-37-A_
920661	1.0 GPF, URINAL (A-42-A)

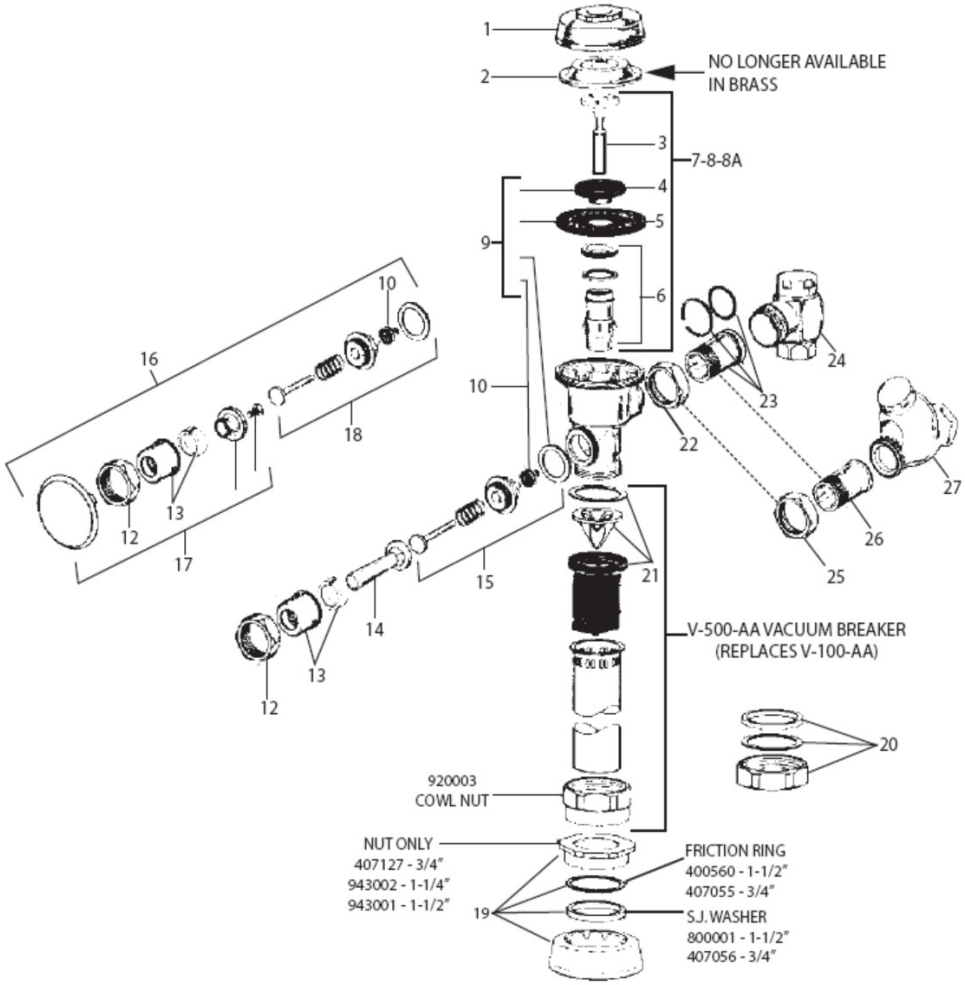

200495 -SLOAN ALL PURPOSE FLUSH VALVE WRENCH

Item	Part No.	Description
1	**800816**	A-72 CP COVER
2	**921012**	PVC INSIDE CAP
3	**800792**	A-19-AC RELIEF VALVE (CLOSET
	800794	A-19-AU RELIEF VALVE (URINAL)
4	**800797**	A-15-A DISC
	920575	COPPER RING ONLY, FOR A-15-A DISC
5	**800793**	A-156-A DIAPHRAM
		A-156-A DIAPHRAM (HOT WATER)
6	**800791**	A-163-A GUIDE
7	**920371**	INSIDE PARTS KIT FOR CLOSETS 4.5 GPF
	920847	INSIDE PARTS KIT FOR CLOSETS 1.6 GPF
8	**920364**	INSIDE PARTS KIT FOR URINALS 1.5 GPF
9	**920366**	A-156-AA CLOSET/URINAL WASHER SET
10	**805667**	B-39 SEAL
11	**920855**	B-32-A CP HANDLE ASSEMBLY
12	**920374**	A-6 CP HANDLE COUPLING
13	**0302109**	B-7-A CP SOCKET
14	**920921**	B-32CP GRIP 12 PER PKG.
15	**920370**	B-50-A HANDLE REPAIR KIT
16	**0303351**	C-42-A 3" CP PUSH BUTTON ASSEMBLY
17	**3303396**	3" CP PUSH BUTTON REPLACEMENT KIT
18	**3303396**	C-64-A 3" PUSH BUTTON REPAIR KIT
19	**920295**	F-5-A 3/4" CP SPUD COUPLING ASSEMBLY
	0306132	F-5-A 1" CP SPUD COUPLING ASSEMBLY
	920320	F-5-A 1-1/4" CP SPUD COUPLING ASSEMBLY
	920325	F-5-A 1-1/2" CP SPUD COUPLING ASSEMBLY
20	**0306052**	F-2-A 3/4" CP OUTLET COUPLING ASSEMBLY
	0306077	F-2-A 1" CP OUTLET COUPLING ASSEMBLY
	920325	F-2-A 1-1/2" CP OUTLET COUPLING ASSEMBLY wS-30
	0306060	F-2-A 1-1/4" CP OUTLET COUPLING ASSEMBLY
	923345	F-2-A 1-1/2" CP OUTLET COUPLING ASSEMBLY
21	**920044**	V-500-A & V-500-AA VACUUM BREAKER REPAIR KIT
22	**920029**	H-550 CP STOP COUPLING
23	____	STOP TAILPIECE (VARIOUS LENGTHS)
24	**000247**	H-600-A 1" SD BAK-CHECK CP CONTROL STOP
	920023	H-600-A 3/4" SD BAK-CHECK CONTROL STOP
	0308881	H-600-A 1" WH BAK-CHECK CONTROL STOP
	0308889	H-600-A 3/4" WH BAK-CHECK CP CONTROL STOP
25	**0308063**	H-6 CP STOP COUPLING
26	**807252**	H-5 CP GROUND JOINT TAIL 1-3/4" LONG
27	**0308884**	H-650-AG 1" SD BAK-CHECK CP CONTROL STOP
	0308882	H-650-AG 1" WH BAK-CHECK CP CONTROL STOP

H-440-AG 1” SCREW DRIVER STOP REPAIR KIT

920997

H-40-AG 1” SCREW DRIVER STOP REPAIR KIT

920033

H-440-AG 1” WHEEL HANDLE STOP REPAIR KIT

922777

H-20-AG 3/4” & 1/2 SCREW DRIVER STOP REPAIR KIT

920999

H-440-AG 3/4” SCREW DRIVER STOP REPAIR KIT

920998

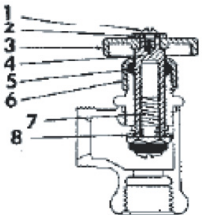

H-20-AG 3/4” & 1/2” WHEEL HANDLE STOP REPAIR KIT

3309103 - REPAIR KIT INCLUDES ITEMS 1-**8**

H-440-AG 3/4” WHEEL HANDLE STOP REPAIR KIT

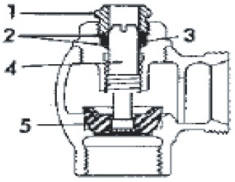

3308443 - REPAIR KIT INCLUDES ITEMS 1-**5**

H-10-AG & H-15-AG 1” SCREW DRIVER STOP REPAIR KIT - **3308095**

H-10-AG & H-15-AG 1” WHEEL HANDLE STOP REPAIR KIT - **3308096**

H-40-AG 1” SCREW DRIVER STOP REPAIR KIT

807608

ANGLE STOPS - COMPLETE

920782 - 1” GROUND JOINT SCREW DRIVER STOP
921036 - 3/4” GROUND JOINT SCREW DRIVER STOP
923001 - 3/4” URINAL STOP VALVE
000247 - 1” COMMODE STOP VALVE

SLOAN STOP REPAIR KITS FOR CURRENT STOPS

O.E.M. SLOAN
920363 - 1”
920361 - 3/4”

WHEEL HANDLE STOP REPAIR KIT

920367 - 1”

SLOAN C.P. STOP CAP

920080 - 1”
920085 - 3/4”
920081 - 1” VP
920082 - 3/4” VP

OEM NEO STYLE
921027 - 1”
921026 - 3/4”

OEM OLD STYLE
920865

SLOAN STOP BONNET NUT, C.P. - FOR REGAL VALVES

807516 - 3/4” **807515** - 1”

SLOAN STOP BONNET NUT, C.P. - FOR REGAL VALVES

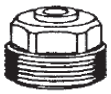

807653 - 1”
807654 - 3/4”

SLOAN S.J. STOP TAILPIECE COMPLETE

920070 - 2-1/16”
920007 - 3-1/16”
920008 - 4-1/16”
920009 - 5-1/16”
802349 - LOCK RING
802346 - O-RING

NIPPLE WRENCH FOR TAILPIECE REMOVAL FOR DELANY, SLOAN TOTO & ZURN

201106

OFFSET VACUUM BREAKER ASSEMBLY. 1-1/2” TUBULAR

920810 - 1” OFFSET
920805 - 1-1/2” OFFSET
920800 - 2” OFFSET

VACUUM BREAKER FLUSH TUBES

-Commode

-Urinal

920360 - 1-1/2” x 3”
920014 - 3/4” x 9” URINAL
920012 - 3/4” x 13” URINAL
920214 - 3/4“ x 24”
920013 - 1-1/4” x 9”
920001 - 1-1/2” x 9”
920980 - 1-1/4” x 13-1/2”
920016 - 1-1/2” x 13-1/2”
920011 - 1-1/4” x 24”
920010 - 1-1/2” x 24”
920038 - 1-1/2” x 30”
920664 - 1-1/2” x 36”

SLOAN FLUSHOMETERS (SERIES 900) (HYDRAULIC FLUSHING SYSTEM
MAINTENANCE GUIDE

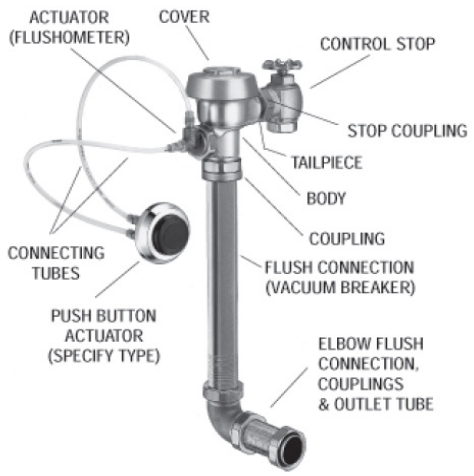

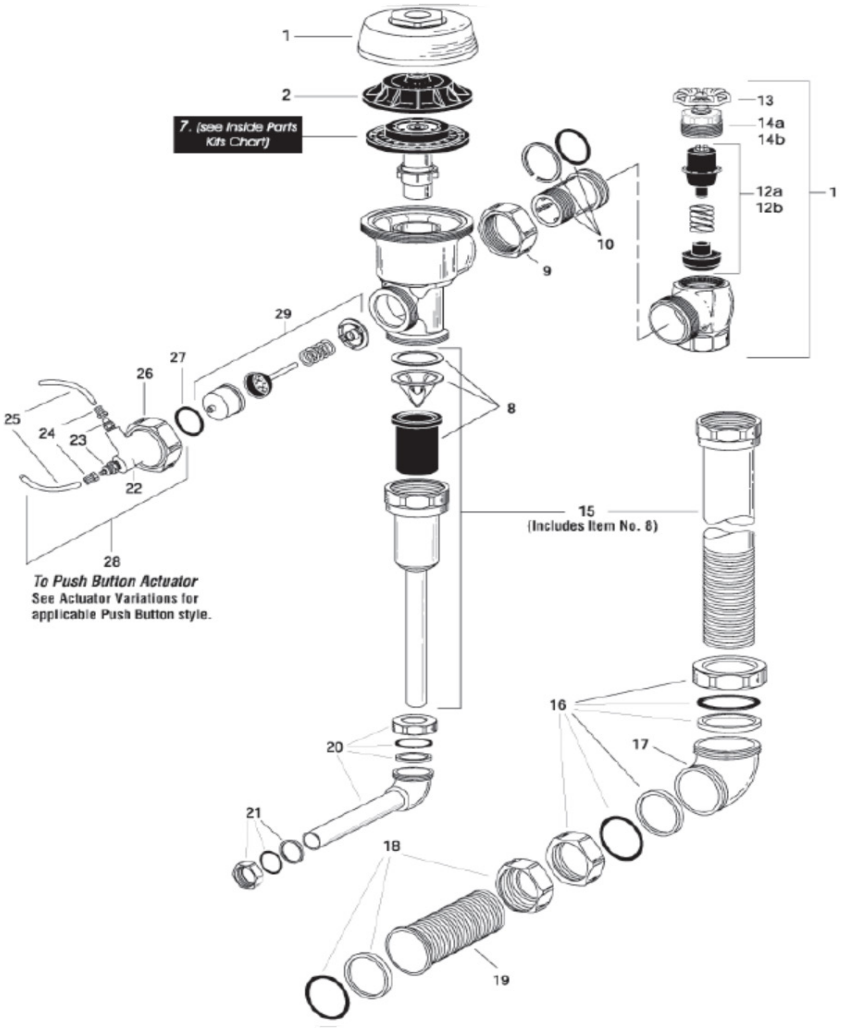

SLOAN DROP-IN KITS	
920371	4.5 GPF, COMMODE (A-36-A)
920505	3.5 GPF, COMMODE (A-38-A)
920847	1.6 GPF, COMMODE (A-41-A)
920364	1.5 GPF, URINAL (A-37-A_
920661	1.0 GPF, URINAL (A-42-A)

ABBREVIATIONS
CP = CHROME PLATED
RB = ROUGH BRASS
gpf = GALLONS PER FLUSH
Lpf = LITERS PER FLUSH
LC = LOW CONSUMPTION
WH = WHEEL HANDLE

Item	Part No.	Description
1	**800815**	RB COVER
2	**921012**	INSIDE COVER
3a	**800808**	RELIEF VALVE, CLOSET (WHITE)(1 REQUIRED; 12 PER PKG.)
3b	**800812**	RELIEF VALVE, URINAL (BLACK)(1 REQUIRED; 12 PER PKG.)
3c	**924442**	RELIEF VALVE, LC CLOSET/URINAL (GREEN)(1 REQUIRED; 12 PER PKG.)
3d	____	RELIEF VALVE, 9 L CLOSET (BLUE)(1 REQUIRED; 12 PER PKG.)
4	**800809**	DISC-FOR ALL INSIDE PARTS KITS (1 REQUIRED; 12 PER PKG.)
5	**800806**	DIAPHRAGM-FOR ALL INSIDE PARTS KITS (1 REQUIRED; 12 PER PKG.)
6a	**800791**	GUIDE ASSEMBLY FOR CLOSET (4.5 GPF/17.0 LPF) OR URINAL (1.5 GPF/5.7 LPF) (1 REQUIRED; 12 PER PKG.)
6b	**920689**	GUIDE ASSEMBLY FOR CLOSET (3.5 GPF/13.2 LPF)(1 REQUIRED; 12 PER PKG.)
6c	**920107**	GUIDE ASSEMBLY FOR LC CLOSET (1.6 GPF/6.0 LPG)(1 REQUIRED; 12 PER PKG.)
6d	**924445**	GUIDE ASSEMBLY FOR LC URINAL (1.0 GPF/3.8 LPF)(1 REQUIRED; 12 PER PKG.)
6e	**920109**	GUIDE ASSEMBLY FOR URINAL (0.5 GPF/1.9 LPF)(1 REQUIRED; 12 PER PKG.)
8	**920044**	VACUUM BREAKER REPAIR KIT
9	**920029**	RB TAILPIECE COUPLING NUT
10	**920009**	RB ADJUSTABLE TAILPIECE, 2-1/16" (52 mm)
11	____	RB WHEEL HANDLE Bak-Check Control Stop
12a	**920367**	1" WHEEL HANDLE REPAIR KIT FOR H-730-A CONTROL STOP
12b	**920356**	3/4" WHEEL HANDLE REPAIR KIT FOR H-730-A CONTROL STOP

13	____	WHEEL HANDLE
14a	____	1" BONNET
14b	____	3/4" BONNET
15	____	VACUUM BREAKER FLUSH CONNECTION (SPECIFY SIZE)
16	**800514**	1-1/2" (38mm) RB COUPLINGS (2 EACH), FRICTION RINGS (2 EACH) & RUBBER GASKETS
17	**926441**	RB ELBOW
18	**000857**	1" (25mm) RB COUPLING, FRICTION RING, AND RUBBER GASKET
19	____	RB FLARED END FLUSH (SPECIFY LENGTH)
20	____	3/4" (19mm) RB ELBOW FLUSH CONNECTION W/ COUPLING & RUBBER GASKET (SPECIFY LENGTH
21	____	3/4" (19mm) RB COUPLING, FRICTION RING, AND RUBBER GASKET
22	**923345**	RB VALVE ACTUATOR HOUSING ONLY
23	**926501**	TUBE FITTING (2 REQUIRED)
24	**926501**	TUBE FITTING NUT (2 REQUIRED)
25	____	1/4" (6mm) X 48" (1,219mm) CONNENCTING TUBES (2 REQUIRED)
26	**920643**	RB HANDLE COUPLING NUT
27	____	"O" RING
28	**924511**	ACTUATOR HOUSING ASSEMBLY (INCLUDES ITEMS 22, 23, 24, 26, & 27)
29	**804578**	ACTUATOR CARTRIDGE ASSEMBLY (REPLACEMENT KIT, INCLUDES ITEM 27)

4

SIDE WALL PUSH BUTTON

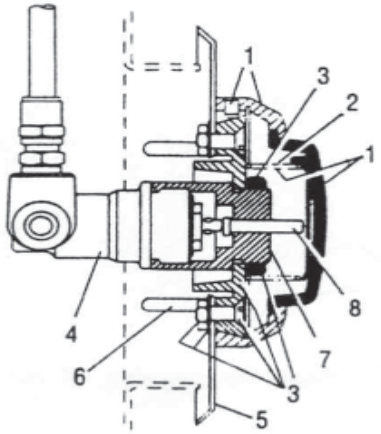

	ACS #		
1	**923314**	HY-1000-A	PUSH BUTTON KIT INCLUDES: PUSH BUTTON, FLANGE SPRING, & SET SCREW
2	**926664**	HY-3	SPRING
3	_____	HY-1001-A	MOUNTING FLANGE KIT INCLUDES: MOUNTING FLANGE, MOUNTING NUT, SCREWS (2), NUTS (2), WASHERS (2)
4	**807400**	HY-71-A	ACTUATOR ASSEMBLY
5	**932441**	HY-40	PLATE
6	**926502**	EL-173	SCREWS
7	_____	HY-73	EXTENSION ADAPTOR
8	_____	HY-74	EXTENSION STEM

FIXTURE WALL PUSH BUTTON

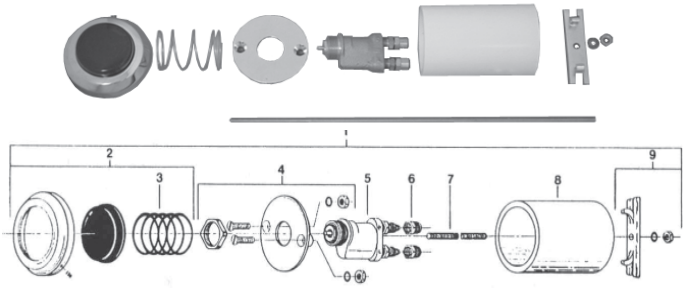

	ACS #		
1	**920321**	HY-33-A	FIXTURE WALL PUSH BUTTON ASSEMBLY
2	**923314**	HY-1000-A	PUSH BUTTON KIT
3	**926664**	HY-3	SPRING
4	_____	HY-1001-A	MOUNTING KIT FLANGE
5	**924551**	HY-50-A	ACTUATOR ASSEMBLY
6	**926502**	HY-35	TUBE FITTING NUT (2 REQUIRED
7	_____	HY-29	THREADED ROD
8	_____	HY-105-A	SPACER
9	_____	HY-1002-A	MOUNTING STRAP KIT

SIDE WALL PUSH BUTTON

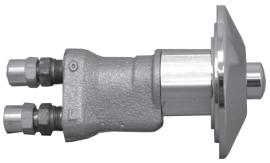

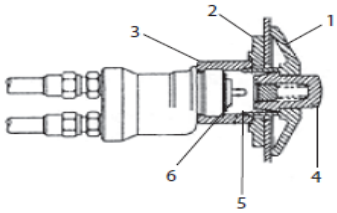

1	_____	HY-91	FLANGE
2	_____	HY-94	MOUNTING WASHER
3	_____	HY-93	MOUNTING NUT
4	_____	HY-86-A	PUSH BUTTON ASSEMBLY
5	_____	EL-109	SPRING
6	**922441**	HY-50-A	ACTUATOR SUB ASSEMBLY

NOTE: USES CARTRIDGE - #808969

METAL PARTITION PUSH BUTTON

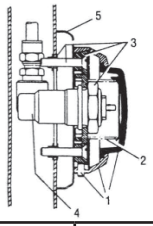

1	**923314**	HY-1000-A	PUSH BUTTON KIT INCLUDES: PUSH BUTTON, FLANGE, SPRING & SET SCREW
2	**926664**	HY-3	SPRING
3	_____	HY-1003-A	MOUNTING FLANGE KIT INCLUDES: MOUNTING FLANGE, MOUNTING NUT, SCREWS (2), & TINNERMAN NUTS (2)
4	**807400**	HY-46	ACTUATOR ASSEMBLY
5	_____	HY-46	MOUNTING FLANGE

FIXTURE WALL METAL PUSH BUTTON

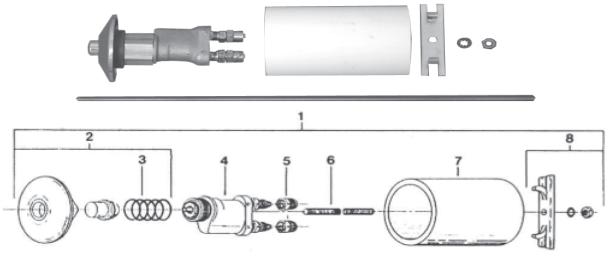

1	**942023**	HY-100-A	FIXTURE WALL METAL BUTTON ASSEMBLY
2	_____	HY-111-A	METAL BUTTON KIT
3	**942301**	EL-109	SPRING
4	**922441**	HY-50-A	ACTUATOR ASSEMBLY
5	_____	HY-46	TUBE FITTING NUT (2 REQUIRED)
6	**942302**	HY-29	THREADED ROD
7	_____	HY-105	SPACER
8	_____	HY-1002-A	MOUNTING STRAP KIT

SENSOR OPERATED FLUSHOMETERS

RETROFIT FLUSH VALVE

002050 - COMMODE RETROFIT FLUSH VALVE
002051- URINAL RETROFIT FLUSH VALVE

ELECTRONIC MODULE FOR AUTO FLUSH VALVES

ELECTRONIC MODULE FOR SLOAN AUTO - FUSH VALVES (CLOSET OR URINAL)

920628

INSIDE PARTS ASSEMBLY FOR SL SENSOR FLUSH VALVE

SEE CHART BELOW FOR SPECIFIC ASSEMBLY KIT

SOLENOID UNIT

SOLENOID UNIT FOR SENSOR FLUSH VALVE

920606

FLEX TUBE DIAPHRAGM KIT	APPLICATION	REGULATOR COLOR
920456	URINAL 0.5 gpf / 1.9 Lpf	GREEN
920450	URINAL 1.0 gpf / 3.8 Lpf	GREEN
920450	URINAL 1.5 gpf / 5.7 Lpf	BLACK
920451	URINAL 3.5 gpf / 13.2 Lpf	WHITE
920451	CLOSET 1.6 gpf / 6.0 Lpf	GREEN
920455	CLOSET 2.4 gpf / 9.0 Lpf	BLUE
920451	CLOSET 3.5 gpf / 13.2 Lpf	WHITE
920451	CLOSET 4.5 gpf / 17.0 Lpf	WHITE

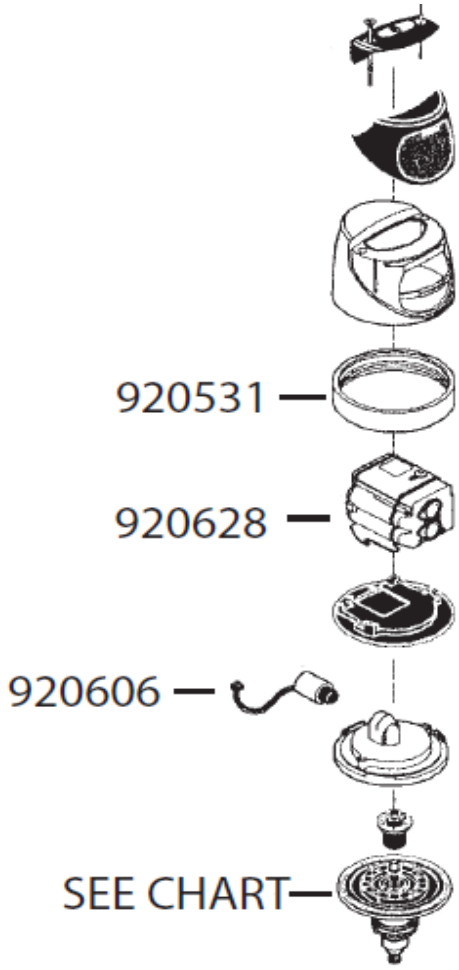

4

SLOAN ELECTRONIC FLUSH (FLUSH VALVES AND PARTS)

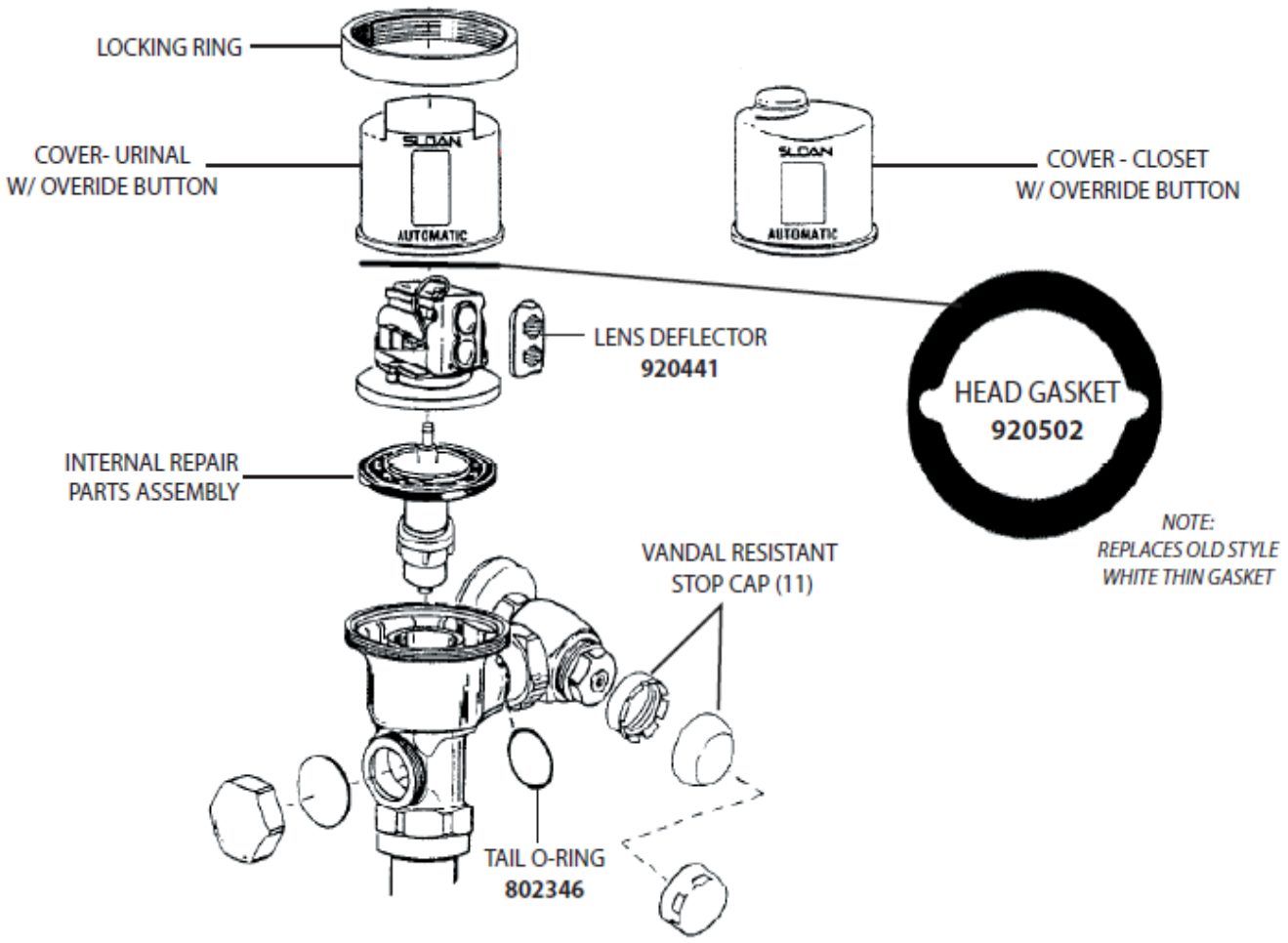

CLOSET SENSOR FLUSH VALVE

1" INLET, FOR 1-1/2" TOP SPUD, 11-1/2" ROUGH IN ABOVE TOP OF FIXTURE

920665 - 3.5GPF
920666 - 1.6GPF

URINAL SENSOR FLUSH VALVE

920667 - 3.0 GPF, 1" INLET,
1-1/4" OUTLET
920668 - 1.5 GPF, 3/4" INLET
3/4" OUTLET

COMMODE SENSOR
COVER CAP ONLY W/ OVERRIDE BUTTON

921028 - CP METAL

URINAL SENSOR
COVER CAP ONLY

921029 - CP METAL

BEAM
DEFLECTOR

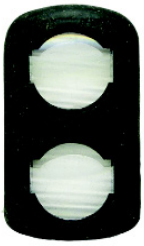

920441

SLOAN ROYAL
FLUSHOMETERS

slimline®
Bedpan Washer
Maintenance Guide

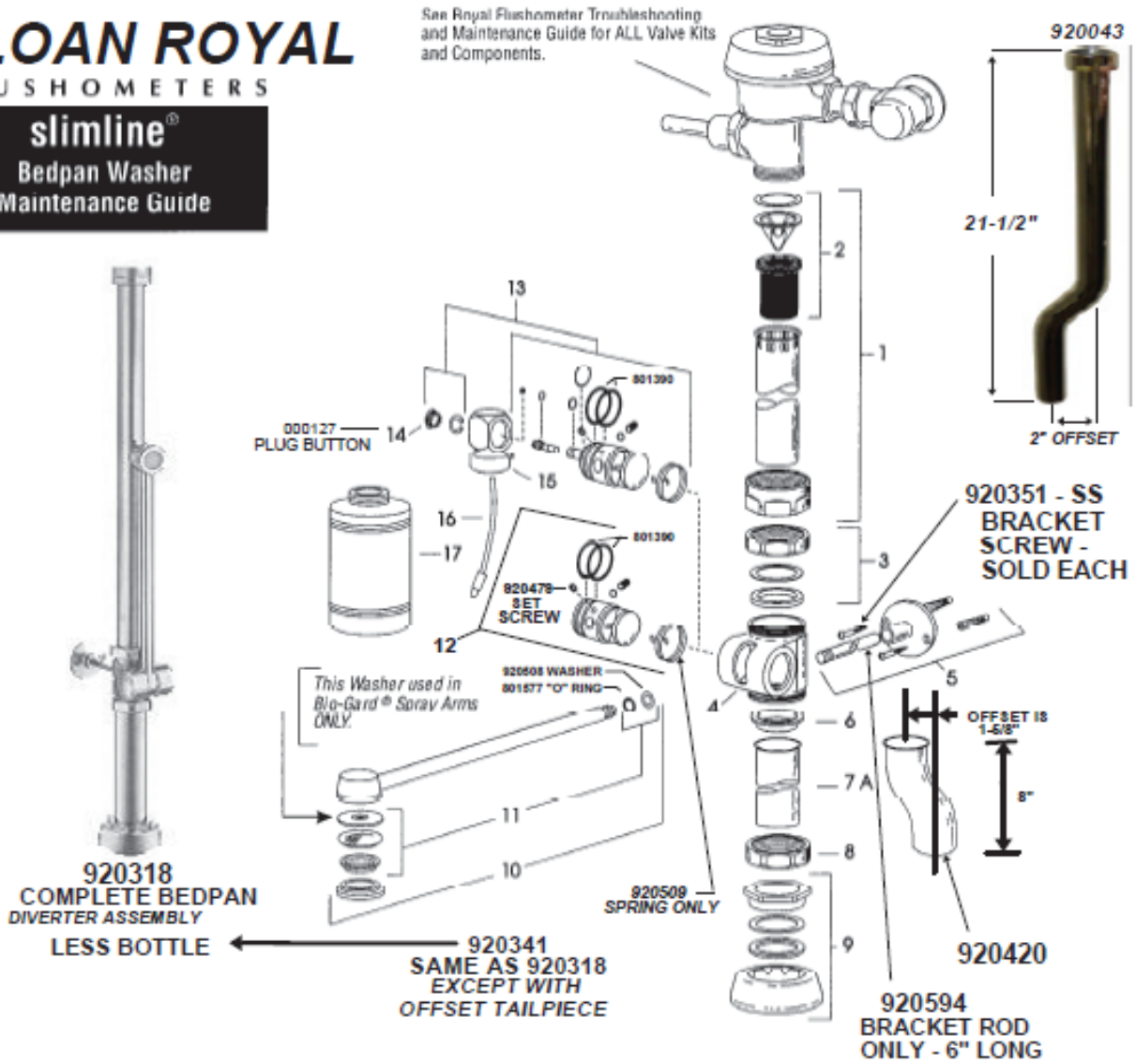

1. **920010** V-600-AA 1-1/2" X 24" VACUUM BREAKER
   920016 V-600-AA 1-1/2" X 13-1/2" VACUUM BREAKER
   920043 V-600-AA 1-1/2" X 21-1/2" VACUUM BREAKER (ADA HEIGHT)
2. **920044** V-651-A VACUUM BREAKER REPAIR KIT
3. **943000** F-2-A 1-1/2" SLIP JOINT COUPLING WITH RINGS
4. **920556** DV-1 DIVERTER VALVE BODY
5. **804794** DV-1001-A WALL SUPPORT KIT
6. **0309027** F-1003 OUTLET TUBE GASKET
7A. **0309029** F-1005 OUTLET TUBE
7B. **920420** F-182 OUTLET TUBE W/1-1/2" OFFSET-8" LONG
8. **943000** F-2 1-1/2" COUPLING NUT WITH RINGS
9. **920325** F-5-A 1-1/2" SPUD COUPLING ASSEMBLY
10. **807657** DV-32-AA SPRAY ARM REPLACEMENT KIT
    3309016 DV-1013-A BIO-GUARD SPRAY ARM REPLACEMENT KIT **NLA**
    3309077 DV-1014-A BIO-GUARD SPRAY ARM REPLACEMENT KIT **NLA**
11. **803341** DV-1007-A SPRAY ARM REPAIR KIT
12. **807743** DV-1003-A PIVOT REPLACEMENT KIT
13. **3309036** DV-1002-A DEOSEPTIC PIVOT REPLACEMENT KIT
14. **000127** DV-21 PLUG BUTTON
15. **0309033** DV-33-A SWIVEL & BALL CHECK ASSEMBLY
16. **0309036** DV-36-A ASPIRATOR TUBE ASSEMBLY
17. **809904** DV-29 DEOSEPTIC SOLUTION BOTTLE

BEDPAN WASHER REBUILD KITS

ACS #	KIT #	DESCRIPTION
807706	DV-50-A	**DIVERTER REBUILT KIT** Includes Outlet Tube Gasket (item 6), Spray Arm Repair Kit (item 11), and all items in Pivot Replacement Kit (item 12) except pivot
807707	DV-004-A	**DEOPESTIC DIVERTER REBUILD KIT** Includes Outlet Tube Gasket (item 6), Spray Arm Repair Kit (item 11), and all items in Pivot Replacement Kit (item 13) except pivot

To convert a Standard Diverter Assembly to a Deoseptic Assembly Use:
3309048 DV-1005-A Deoseptic Conversion Kit

ZURN AQUAFLUSH Z-6000

PARTS IDENTIFICATION FOR HANDLE-OPERATED FLUSH VALVES

NEW: **920037** - TRIPLE FILTER AQUAVANTAGE CLOSET KIT
*CHEMICAL RESISTANT *3.5 GPF
*UPGRADES BOTH ZURN AND SLOAN FLUSH VALVES

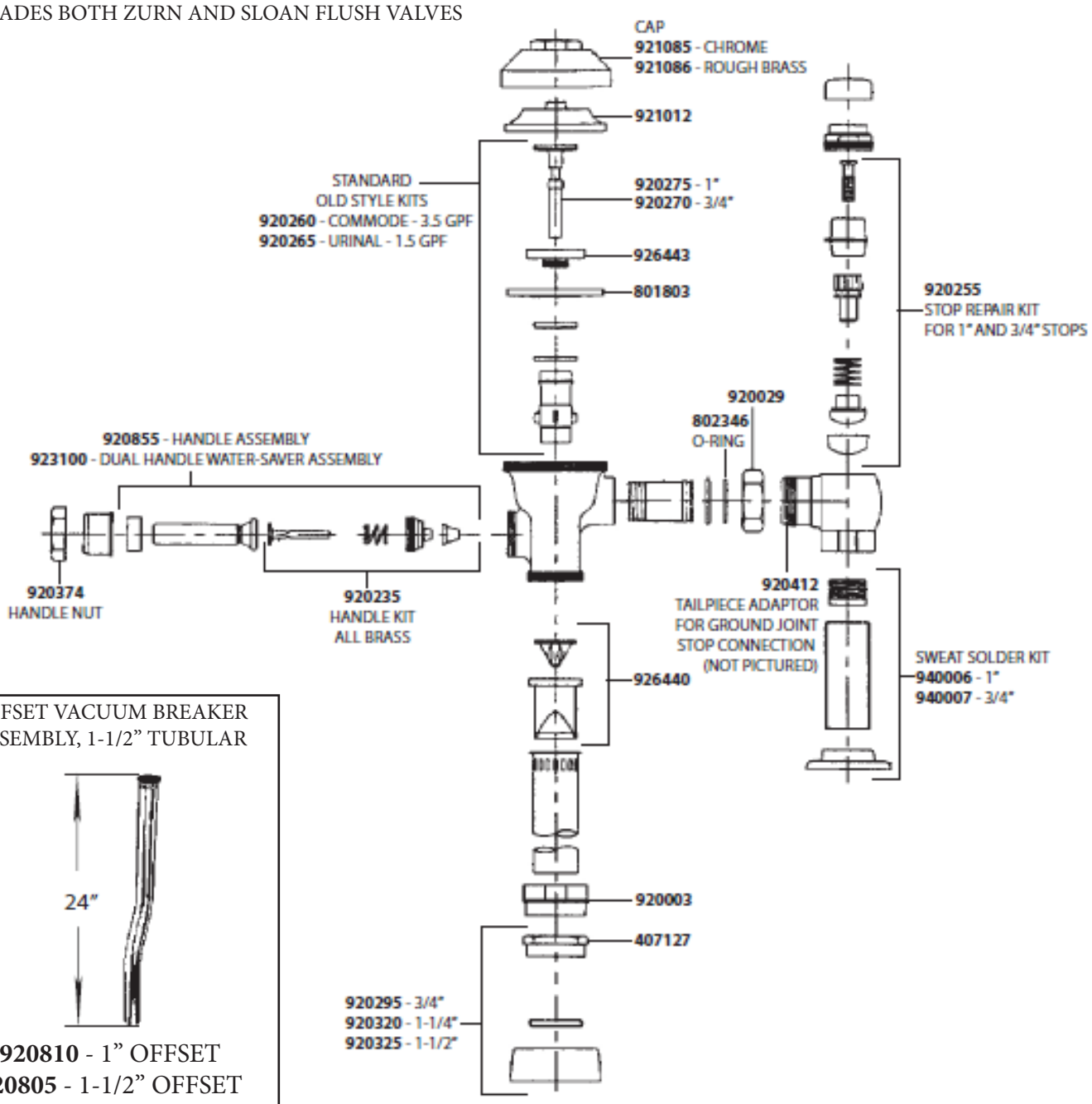

OFFSET VACUUM BREAKER ASSEMBLY, 1-1/2" TUBULAR

920810 - 1" OFFSET
920805 - 1-1/2" OFFSET
920800 - 2" OFFSET

OFFSET FLUSHVALVE TAILPIECE, 1-1/2" TUBULAR

804953- 1-3/4" OFFSET

NOTE: COMPLETE ROUGH BRASS 3.5 GPF PRISON HEAD UNIT ONLY - **920101**

801803 - NEW STYLE AQUAFLUSH DIAPHRAGM KIT ONLY
*FOR URINALS (1.0/1.5 GPF)
*AND CLOSETS (1.6/3.5 GPH)
*KIT HAS 3 FLOW RINGS UPGRADES BOTH SLOAN AND ZURN FLUSH VALVES
*CHEMICAL AND CLOG RESISTANCE

AQUAVANTAGE DIAPHRAGM DROP IN REPAIR KITS

926559	4.5 GPF
920037	3.5 GPF
920269	1.6 GPF
924021	2.4 GPF
920959	3.0 GPF
920271	1.5 GPF
920272	1.0 GPF
920900	0.5 GPF

AQUAVANTAGE COMPLETE REBUILD KITS

REBUILD KITS CONTAIN:
VALVE REPAIR KIT,
HANDLE REPAIR KIT,
VACUUM BREAKER KIT REPAIR KIT,
AND TAILPIECE O-RING

920911	4.5 GPF
920273	3.5 GPF
920274	1.6 GPF
940899	2.4 GPF
920910	3.0 GPF
920276	1.5 GPF
920277	1.0 GPF
920912	0.5 GPF

AQUAFLUSH DIAPHRAGM DROP IN REPAIR KITS

920382	4.5 GPF
920260	3.5 GPF
920266	1.6 GPF
920913	2.4 GPF
920259	3.0 GPF
920265	1.5 GPF
920268	1.0 GPF
920915	0.5 GPF
920912	2.7 GPF

AQUAFLUSH COMPLETE REBUILD KITS

REBUILD KITS CONTAIN:
VALVE REPAIR KIT,
HANDLE REPAIR KIT,
VACUUM BREAKER KIT REPAIR KIT,
AND TAILPIECE O-RING

920871	4.5 GPF
920261	3.5 GPF
920262	1.6 GPF
920916	2.4 GPF
920917	3.0 GPF
920263	1.5 GPF
920264	1.0 GPF
920918	0.5 GPF

4

HANDLE O-RING OLD STYLE FLUSHTROL REPLACEMENT PARTS

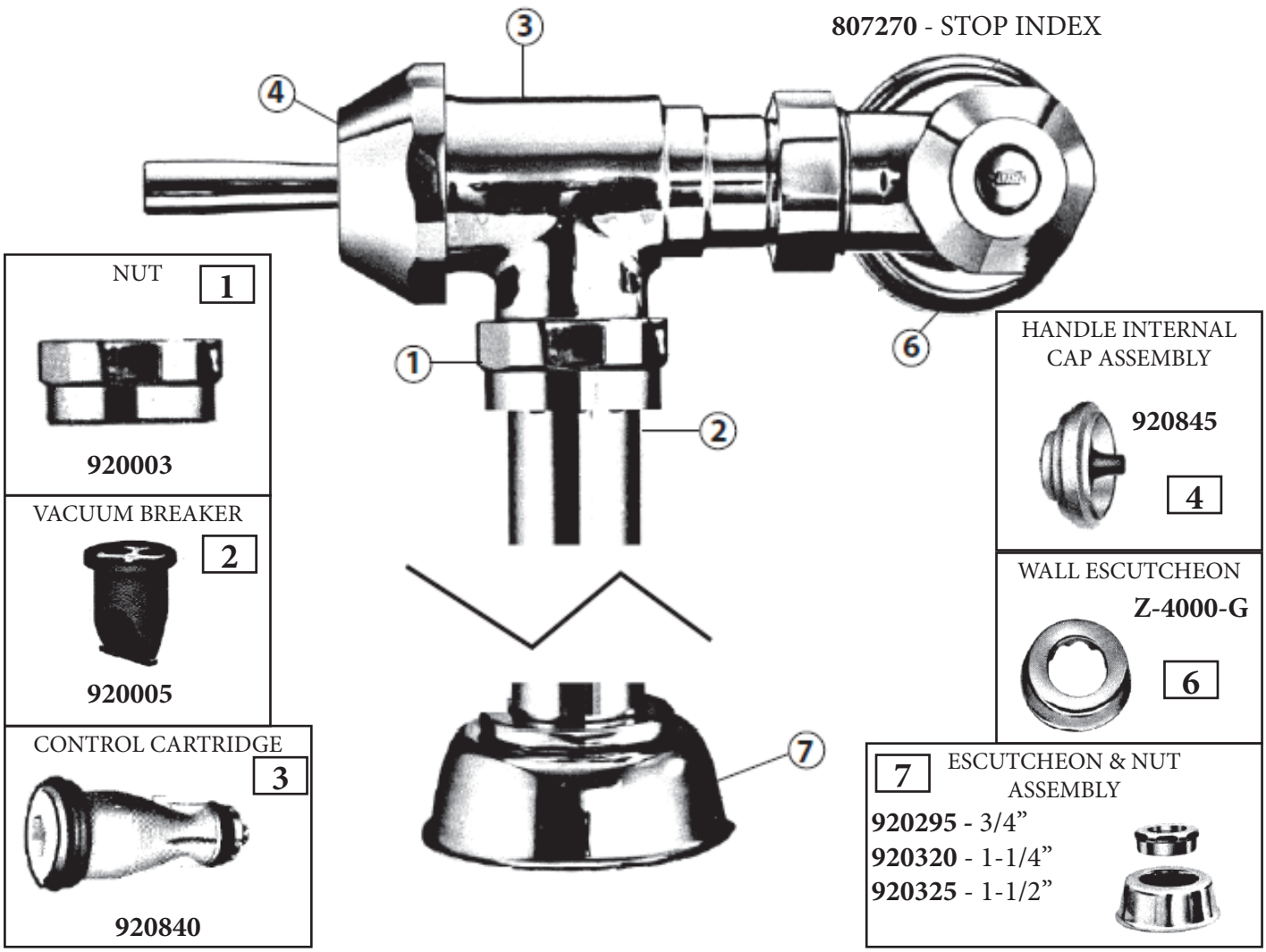

ZURN RETRO FIT AUTOMATIC SENSOR UNIT FOR FLUSH VALVE (DOES NOT INCLUDE ENTIRE VALVE)

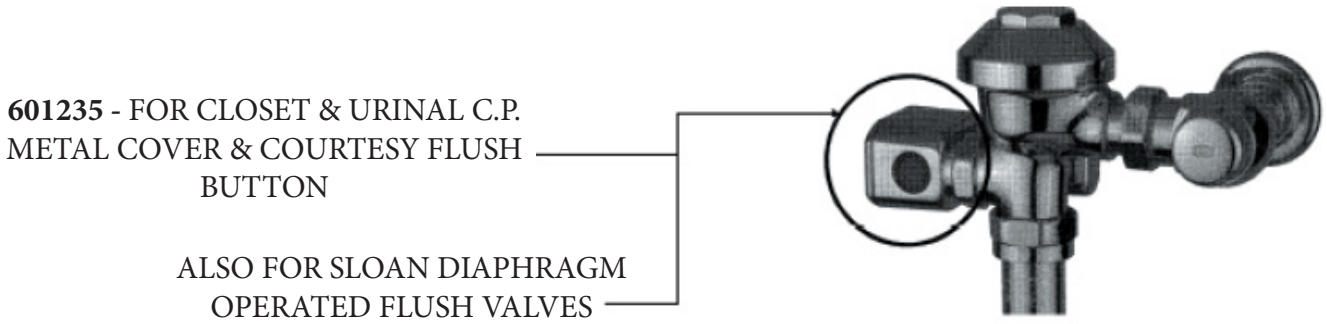

HANDLE O-RING

920465

HANDLE SEAL CHEMICAL RESISTANT BLUE NEOPRENE

920424

HANDLE NUT GASKET

920434

VACUUM BREAKER FOR FLUSH VALVE

926440

STOP TAILPIECE O-RING

926430

STOP REPAIR KIT

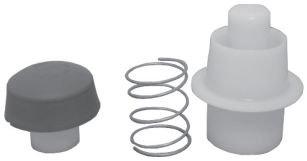

920255

1-1/2" SPUD ASSEMBLY

100060

DIAPHRAGM ONLY

944069 - LIGHT BLUE
942605 - DARK BLUE

HANDLE REPAIR KIT

920448

SEAL PLUG FOR 3/4" & 1" STOP REPAIR KITS

926446

DIAPHRAGM FOR CLOSET AND URINAL

801803

BLUE SPUD WASHER

920087 - 3/4"
920084 - 1-1/4"
920083 - 1-1/2"

DUAL FLUSH HANDLE ASSEMBLY

923100

ZURN WONDER WRENCH

200494

SLIP JOINT WASHER

926439 - 3/4"
926442 - 1-1/4"
926444 - 1-1/2"

FRICTION RING

926435 - 3/4"
926434- 1-1/4"
926433 - 1/1/2"

FLOW RINGS

920068 - WHITE RING - 1.6GPF
920078 - YELLOW RING WITH WHITE RELIEF VALVE - 3.5GPF
920077 - YELLOW RING WITH BLACK RELIEF VALVE - 1.5GPF

FLOW RINGS

920079 - BLACK RING - URINAL 1.0GPF

SECTION FIVE
COMMON REPAIR PARTS: PLUMBING, ELECTRICAL, APPLIANCES, MISCELLANEOUS

500435 - CHROME PLATED ZINC SHOWER HEAD WITH WHITE 1-3/4" FACE & BRASS BALL JOINT
500035 - ALL PVC SHOWER HEAD WITH WHITE FACE 1-3/4" FACE AND PVC BALL JOINT

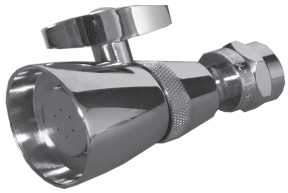

400300 - ALL BRASS SHOWER HEAD WITH FLOW ADJUSTMENT KNOB, 1-3/4" FACE
500040 - ALL BRASS SHOWER HEAD WITH FLOW ADJUSTMENT KNOB, 2-1/2" FACE

501540 - BRASS WATER SAVING SHOWER HEAD LESS SHUT-OFF. REDUCES FLOW TO 2.5 GPM

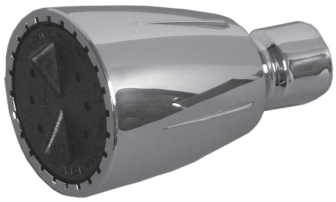

500045 - PVC SHOWER HEAD WITH BRASS BALL JOINT. 2.5 GPM WITH BLACK 1-1/2" FACE
801003 - PVC SHOWER HEAD WITH BRASS BALL JOINT, 2.5 GPM WITH BLACK FACE VANDAL PROOF

500034 - BRADLEY INSTITUTIONAL SHOWER HEAD

500118 - 3 POSITION SHOWER HEAD

500022 - MASSAGE SHOWER HEAD. CHROMED WITH BLACK FACE.

600014 - DELUXE WHITE SHOWER HEAD WITH ADJUSTABLE PULSATING SPRAY MASSAGE. 5 SPRAY SETTINGS.

602548 - ZURN WATER SAVER SHOWER HEAD WITH ADJUSTABLE SPRAY 1.5GPM

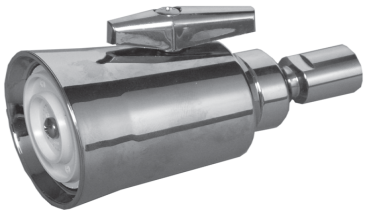

801888 - SYMMONS "SUPER HEAD" SHOWER HEAD. WITH VOLUME CONTROL AND 1/2" FIP CONNECTION

805139 - ADJUSTABLE SPRAY FACE SHOWER HEAD

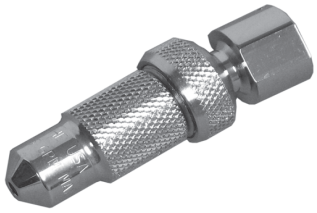

505009 - INSTITUTIONAL SHOWER HEAD. ALL BRASS CHROME PLATED, ADJUSTABLE WITH BALL JOINT VANDAL PROOF 2.5GPM, 1/2" FIP CONNECTION

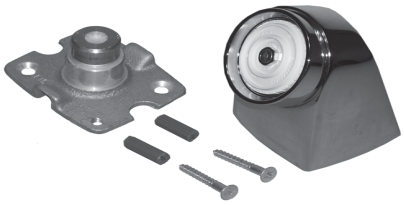

500175 - SYMMONS INSTITUTIONAL SHOWER HEAD

501440 - SPEAKMAN ADUJSTA-SPRAY WALL MOUNTED SHOWER HEAD

805936 - ACORN FEMALE SHOWER HEAD ASSEMBLY WITH VANDAL RESISTANT LOCK SCREW. 2.5 GPM

600071 - T&S VANDAL RESISTANT SHOWER HEAD

000348 - SLOAN ACT-O-MATIC SHOWER HEAD

500203 - CHROME PLATED PVC SHOWER HEAD WITH BRASS BALL JOINT

501652 - WATER PIK MASSAGE SHOWER HEAD. WHITE

502248 - SPEAKMAN MASSAGE SHOWER HEAD. WITH VOLUME CONTROL FROM FULL SPRAY TO PAUSE 3-1/2" FACE WITH SPRAY ADJUSTER

500033 - HAND HELD PULSATING SHOWER HEAD KIT INCLUDES ALL MOUNTING HARDWARE AND 60" CHROME PLATED HOSE.

500061 - DELTA EUROPEAN STYLE HAND HELD SHOWER MASSAGE, ADJUSTABLE. CHROME

500157 - DELTA HAND HELD SHOWER HEAD WHITE WITH CHROME FACE. MASSAGE ACTION OR FULL SPRAY

DELTA HAND HELD SHOWER HEAD. WHITE
ENERGY SAVING 2.0 GPM

500176 - WITH PUSH BUTTON
500177 - LESS PUSH BUTTON

HAND HELD SHOWER HEAD, WHITE

500048 - WITH PUSH BUTTON
500047 - LESS PUSH BUTTON

DELTA HOSE FOR HAND SHOWER
HEAVY DUTY STAINLESS STEEL. DOUBLE SPIRALED

500171 - 60”
500170 - 69”

DELTA HOSE FOR HAND SHOWER -VINYL

500159 - 60”
500160 - 69”
500161 - 84”

BUNGEE SHOWER HOSE

500798 - 58“ EXTENDS TO 80”

DELTA HOSE FOR HAND SHOWER.
CHROME PLATED

500194 - 60” CHROME SINGLE SPIRAL
500158 - 69” CHROME SINGLE SPIRAL

HEAVY DUTY STAINLESS REPLACEMENT HOSES

500144 - 59”
500145 - 69”

HOSE CONNECTION WASHER

500164 - 3/4” OD 1X /16” THICK -5 PER BAG

5

DELTA BAR SLIDE AND KNOB

500156 - COMPLETE ASSEMBLY
500162 - 3/4" SLIDE INSERT ONLY. WHITE PLASTIC
500169 - 18MM SLIDE INSERT ONLY. WHITE PLASTIC
500154 - SLIDE BAR KNOB ONLY

DELTA BAR SLIDE WITH TENSIONER

500101- FOR GUIDE RAIL (CLEAR PVC)

CHROME PLATED END CAP FOR GUIDE RAIL

808086

CHROME DELTA WALL MOUNTED PIN BRACKETS

C.P. METAL-EXPOSED MOUNT WITH C.P. SCREWS AND PLASTIC ANCHORS

500167 - DELTA
500054 - GENERIC
500165 - SELF-ADHESIVE MOUNT C.P. PLASTIC

DELTA DIVERTER FOR SHOWER ARM DELUXE, PUSH-PULL CONTROL - C.P.

500172 - DELTA
500213 - GENERIC

DIVERTER FOR SHOWER ARM LEVER CONTROL

500580- Delta
500535- Generic

DELTA ADAPTOR FOR HAND SHOWER HOSE TO AERATOR TYPE FAUCET

500178

DELTA QUICK CONNECT SET FOR HOSE TO HAND SHOWER - C.P.

500179

DELTA DELUXE 24" WALL BAR WITH CONCEALED TWO SCREW MOUNTING - C.P.

500168- COMPLETE SLIDE BAR UNIT

500156- BAR SLIDE AND KNOB

3/4" SS BAR

DELTA 1/2" ATMOSPHERIC VACUUM BREAKER C.P. WITH BRASS SHIELD

500163 - DELTA
806547 - DELTA REPAIR KIT
806548 - ???
500174 - GENERIC
500239 - GENERIC REPAIR KIT
806547 - VACUUM BREAKER REPAIR KIT

SHOWER ARM C.P. BRASS

500050 - 1/2" x 6"
500051 - 1/2" x 8"
500052 - 1/2" x 10"

WATER FLOW RESTRICTOR FOR SHOWER HEAD SOFT PLASTIC

404382

WATER FLOW RESTRICTOR FOR SHOWER HEAD SOFT RUBBER

404380

SHOWER ARM ESCUTCHEON SET SCREW TYPE

808086

SPLIT ONE SHOWER ARM ESCUTCHEON CHROME PLATED PLASTIC

808086

SHOWER ARM ESCUTCHEON

808086

CHROME PLATED END CAP FOR GUIDE RAIL

500031 - VOLUME CONTROL ALL C.P. BRASS
003188 - STOP VALVE ALL C.P. BRASS

SHOWER HEAD BALL JOINT ADAPTER

400950 - FOR AMERICAN STANDARD
400951 - FOR GERBER
400952 - FOR PRICE PFISTER

C.P. BRASS SHOWER ARM

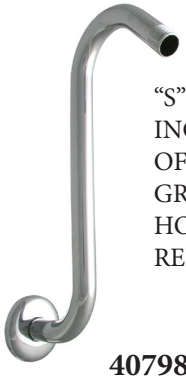

"S" RISER TYPE. INCREASES HEIGHT OF SHOWER HEAD. GREAT FOR HOTEL/MOTEL RENOVATIONS

407985 - A=10"
405987 - A=8"

SWIVEL CONNECTOR

ENGINEERING GRADE PLASTIC FITS BETWEEN SHOWER HEAD AND HOSE

500192 - DELTA

SWIVEL CONNECTOR

FITS BETWEEN SHOWER HEAD AND HOSE. ALL METAL

500166 - DELTA
500067 - GENERIC

SHOWER ARM MOUNT

PIN TYPE. CONNECTS TO END OF SHOWER ARM. ALL METAL, MUST USE WITH SWIVEL CONNECTOR
500193 - ALSONS
500066 - GENERIC

5

WALL SWITCH- SINGLE POLE 15A, 120V

940742 - IVORY STANDARD
944111 - WHITE STANDARD
940740 - IVORY (QUIET TYPE)
940741 - IVORY 3WAY/4WAY

WALL SWITCH- DOUBLE POLE 30A, 120/277V
HEAVY DUTY GROUNDED

940016 - IVORY

DUPLEX RECEPTACLE
SIDE OR BACK WIRED, 15A, 125 V, 3 WIRE"U" GROUND

940743 - IVORY

GROUND FAULT INTERRUPTER
GROUNDING DUPLEX RECEPTACLE
15A, 125V, 20A FEED THRU

940751 - IVORY

WALL PLATE SCREWS PAINTED STEEL

940734 - IVORY,1/2" LONG
940735 - WHITE, 1/2" LONG
940665 - IVORY, 5/16" LONG

COMBINATION SWITCH/RECEPTACLE PLATE?
4-9/16" x 4-1/2"

940401 - IVORY
940300 - WHITE

BLANK WALL PLATE SINGLE GANG
2-3/4" x 4-1/2"

940019 - IVORY

BLANK WALL PLATE TWO GANG
4-9/16" x 4-1/2"

940402 - IVORY

TELEPHONE WALL PLATE
2-3/4" x 4-1/2"

940403 - IVORY

OVERSIZED WALL SWITCH PLATE
3-1/8" x 4-7/8"

949020 - IVORY

DUPLEX WALL RECEPTACLE STANDARD SIZE

943450 - STAINLESS
940040 - IVORY
940301 - WHITE

SINGLE SWITCH WALL PLATE STANDARD SIZE

940045 - IVORY
946400 - WHITE
943114 - STAINLESS

CO-AX WALL PLATE

940012 - IVORY

DOUBLE SWITCH WALL PLATE STANDARD SIZE

940041 - IVORY
940304 - WHITE
941514 - STAINLESS STEEL

JUMBO SWITCH WALL PLATE

949024 - IVORY
940303 - WHITE

TRIPLE SWITCH WALL PLATE STANDARD SIZE

940887 - IVORY

G.F.I. PLATE

940004 - IVORY
944092 - WHITE

OVERSIZED WALL PLATE DUPLEX RECEPTACLE

940042 - IVORY
940302 - WHITE

WIRE NUT

940724 - RED 18-10 GA(100/BAG)
18 940723 - YELLOW 18-12 GA(100/BAG)
940722 - ORANGE 18-14 GA(100/BAG)
940721 - BLACK 18-14 GA(100/BAG)

WIRE NUT WITH WINGS

940719 - GRAY 14-8 GA(100/BAG)
940718 - RED 18-10 GA(100/BAG)

ELECTRICAL TAPE 3/4" WIDE X 60' LONG

400981

LIGHT GLOBE COVER NUT (WHITE)

948010

MODULAR PHONE JACK ASSEMBLY

940201

MODULAR DUPLEX PHONE JACK

940203

MODULAR WALL PHONE JACK

940202

LIFESAVER BRAND SMOKE DETECTOR

*CAN INTERCONNECT WITH UP TO 24 LIFESAVER ALARMS.
*ALL INTERCONNECTED DETECTORS WILL SOUND SIMULTANEOUSLY IF ONE IS ACTIVATED.
*GREEN AC POWER LIGHT INDICATES DETECTOR IS ON.
*RAPID FLASHING LED INDICATES IF THE DETECTOR IS OFF
THE ORIGINATING ALARM WHEN MORE THAN ONE
*TEST BUTTON INTERCONNECTED
*QUICK CONNECT HARNESS

940030 - 120 VOLT AC DIRECT CONNECT
940036 - 120 VOLT AC DIRECT CONNECT WITH BATTERY BACK-UP

FIREX BRAND SMOKE ALARM
120 VOLT AC DIRECT CONNECT

*INTERCONNECTABLE UP TO 6 UNITS
*QUICK CONNECT FEATURE

400981

LIFESAVER BRAND SMOKE DETECTOR
BATTERY OPERATED

*9 VOLT BATTERY OPERATED
*TEST BUTTON
*COMPLIES WITH HUD STANDARDS

400981

BATTERIES

008452 - 9 VOLT
940034 - AA (4 PACK)
940037 - AAA (4 PACK)
940671 - C (2 PACK)
941433 - D (2 PACK)

941147 - LITHIUM BATTERY FOR SENSOR FAUCET (2CR-5MPA)
945556 - 6 VOLT LITHIUM BATTERY (P6916-BAT-LITH)
945001 - BATTERY FOR EMEGENCY EXIT LIGHT

TRI-GUARDS -WALL CORNER GUARDS

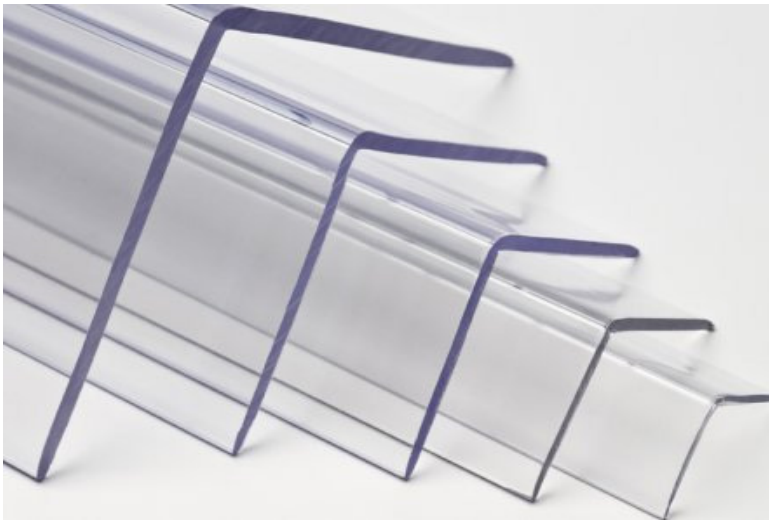

AVAILABLE COLORS

1. BEIGE
2. BLACK
3. BLUE
4. BROWN
5. GREEN
6. GREY
7. IVORY
8. WHITE

ACS NUMBER	LENGTH	COLOR	SIZE	ATTATCHMENT METHOD	MATERIAL	CTN QTY
940088	4’	CLEAR	3/4” x 3/4”	Not Drilled, w/Drive Screw/Nail	LEXAN	25
940600	4’	CLEAR	1-1/8” x 1-1/8”	PRE-DRILLED W/SCREWS	LEXAN	25
940085	4’	CLEAR	3/4” x 3/4”	SELF-ADHESIVE	High Impact Plastic	50
940089	4’	CLEAR	3/4” x 3/4”	Not Drilled, w/Drive Screw/Nail	LEXAN	30
000373	8’	CLEAR	3/4” x 3/4”	Not Drilled, w/Drive Screw/Nail	GENERIC	10
941008	4’	IVORY	1-1/8” x 1-1/8”	SELF-ADHESIVE	LEXAN	25
941047	4’	BEIGE	3/4” x 3/4”	SELF-ADHESIVE	LEXAN	12
941007	4’	GREEN	1-1/8” x 1-1/8”	SELF-ADHESIVE	LEXAN	12
941049	4’	GREY	1-1/8” x 1-1/8”	SELF-ADHESIVE	LEXAN	12
940603	8’	CLEAR	1-1/8” x 1-1/8”	PRE-DRILLED W/SCREWS	LEXAN	12
940604	8’	CLEAR	1-1/8” x 1-1/8”	SELF-ADHESIVE	LEXAN	12
000388	8’	CLEAR	3/4” x 3/4”	SELF-ADHESIVE	GENERIC	25
940601	4’	CLEAR	2” x 2”	PRE-DRILLED W/SCREWS	LEXAN	25

WALL REPAIR KIT
A MAINTENANCE MUST!

REPAIR YOUR DAMAGED WALLS WITH OUR EASY TO USE WALL PATCH REPAIR KITS. IT'S AS EASY AS SAND THE HOLE, APPLY PATCH, AND MUD!! DON'T LET THIS EASY REPAIR GET YOU DOWN. USE OUR PATCH.....IT'S EASY!

940820 - 4" WALL PATCH
940821 - 6" WALL PATCH
940822 - 8" WALL PATCH
940890 - 12" WALL PATCH

WALL ACCESS PANELS

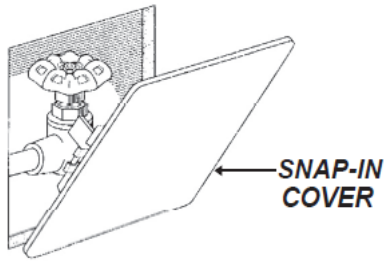

1. UNFOLD INSTRUCTION SHEET AND USE AS A TEMPLATE. OUTLINE TEMPLATE, THEN CUT ALONG LINES

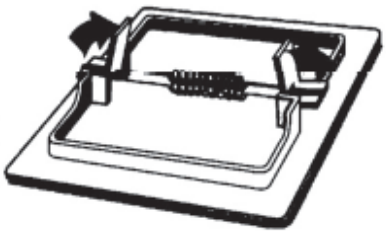

2. FLIP CLIPS UP AS SHOWN

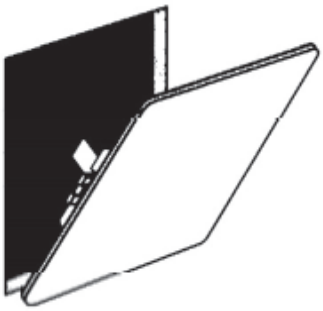

3. ALIGN PANELS INSIDE LEDGE WITH BOTTOM OF OPENING, THEN PUSH PANEL AGAINST WALL. TO REMOVE, SIMPLY PULL OUT AT OPPOSITE CORNERS.

949019 - 8 X 8
949018 - 14 X 14

SNAP-EASE ACCESS PANEL (FRAME TYPE)

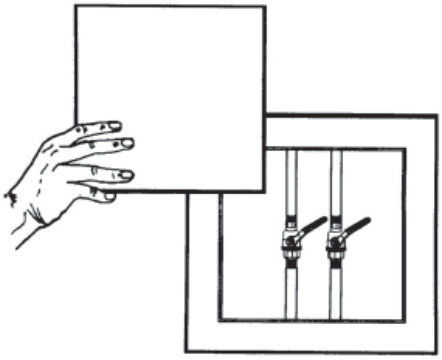

*EASILY INSTALLED TO ELIMINATE UNSIGHTLY SHEETROCK REPAIRS
*PROVIDES FOR FUTURE ACCESS TO PLUMBING OR WIRING BEHIND WALL
*CONSTRUCTED OF HIGH-IMPACT WHITE ABS
*CAN BE PAINTED OR WALLPAPERED

402954 - 6” X 9”
949029 - 8” X 8”
402955 - 14” X 14”
949031 - 14” X 26”

PLASTIC ACCESS PANEL

*BEVELED EDGES
*INDENTED SCREW HOLES IN CORNERS

949032 - 12” X 12”

5

RANGE REFLECTOR PAN FOR GE/HOT POINT

940694- 6”
940696- 8”

*FOR HINGED TYPE RANGES
*HEAVY CHROME PLATING

RANGE REFLECTOR PAN FOR WESTINGHOUSE

940902- 6”
940903- 8”

*2” ID BOTTOM HOLE
*6” ACTUAL OD IS 6-1/4”
*8” ACTUAL OD IS 8-1/8”

RANGE REFLECTOR PAN “UNIVERSAL”

*FITS MOST HINGED TYPE ELEMENTS FOR ELECTRIC RANGES EXCEPT GE/HOTPOINT

940305- 6” (6-1/4” O.D.)
940306- 8” (8-1/4” O.D.)

CHROME TRIM TRING FOR GE/HOTPOINT

940697- 6” (7-7/16” O.D.)
940698- 8” (9-9/16” O.D.)

CHROME TRIM RING FOR WESTINGHOUSE

940309- 6”
940312- 8”

CHROME TRIM RING “UNIVERSAL”

940307- 6”
940308- 8”

CHROME DEEP REFLECTOR BOWL, FOR GE/HOTPOINT

940310- 6” (7-5/8” O.D.)
940311- 8” (9-3/4” O.D.)

RANGE REFLECTOR BOWL FOR WHIRLPOOL

940313- 6”
940314- 8”

RANGE REFLECTOR BOWL “UNIVERSAL”

941019 -6”, C.P. ALUMINUM
941018 -8” (9-3/8” O.D.), CP ALUMINUM
941300 - 6”, BLACK PORCELAIN
941301- 8”, BLACK PORCELAIN

BROAN ALUMINUM RANGE HOOD FILTERS 10-1/2” X 3-1/4” DOME

940320- Fits Broan, GE, Nautilus, Sears

BROAN ALUMINUM RANGE HOOD FILTERS 9-1/2” DIAMETER

940874- Fits Nutone, Aubrey, Nautilus, Miami Carey

BROAN ALUMINUM RANGE HOOD FILTERS

ACS NUMBER	FITS	SIZE
940316	GE,HOTPOINT	10-3/8” x 11-3/8” x 3/8”
940317	NUTONE, VENTRICA, KITCH-N-VENT	8-1/4” x 11-1/4” x 3/8”
940318	RANGAIRE, WHIRLPOOL	8-5/8” x 11” x 3/8”
940319	BROAN, CALORIC, GE, NAUTILUS, SEARS	8-3/4” x 10-1/2” x 3/32”

SECTION SIX
TOOLS, CHEMICALS, CAULK, & DRILL BITS

TUBING CUTTER

200008 - 1/4" TO 2-5/8" (AUTOMATIC)
200007 -1/8" TO 1-1/4" (MANUAL)
204785 - CUTTER WHEEL (METAL) FOR 200008

RIGID TUBING CUTTER

200062 - 1/4" TO 1-1/8" (FOR COPPER)
200092 - REPLACEMENT WHEEL ONLY

RIGID TUBING CUTTER

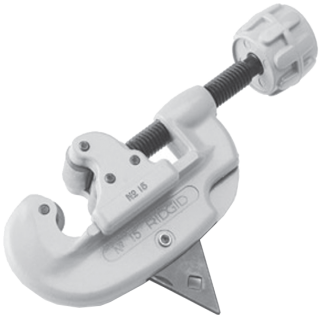

203541 - 5/8" TO 2-1/8"
202214 - REPLACEMENT WHEEL ONLY

AUTO CUTS

*CUTS COPPER TUBING WITH LESS THAN 1" OF CLEARANCE
*SPRING LOADED CUTTER WHEEL FOR CONSTANT CUTTING PRESSURE
*RATCHET HANDLE AVAILABLE FOR EXTRA LEVERAGE IN AWKWARD SPACES

200034- COPPER TUBING CUTTER 1/2" COPPER TUBING
200035- COPPER TUBING CUTTER 3/4" COPPER TUBING
200037- RATCHET HANDLE FOR 1/2" CUTTER
200036- RATCHET HANDLE FOR 3/4" CUTTER
201173- REPLACEMENT CUTTER WHEEL

PVC TUBING CUTTER FOR UP TO 1" PVC TUBING

204424

RATCHET TYPE PVC CUTTER/SNIPPER FOR 1/8" TO 2-5/8" O.D.

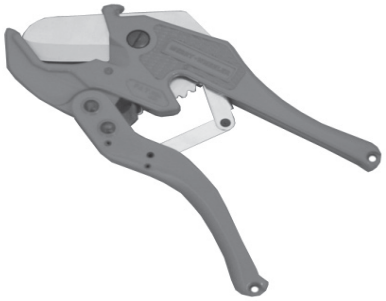

201502 - WHEELER REX
200050 - GENERIC

HEAVY DUTY HANDLE PULLER (BIG YANK SENIOR)

200245

HEAVY DUTY HANDLE PULLER (BIG YANK SENIOR 3 ARM)

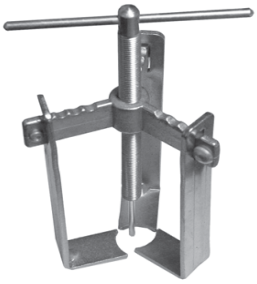

201103

HEAVY DUTY HANDLE PULLER

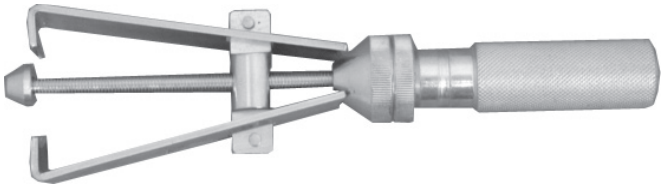

809471

BASIN WRENCH WITH EXTRA LARGE JAW

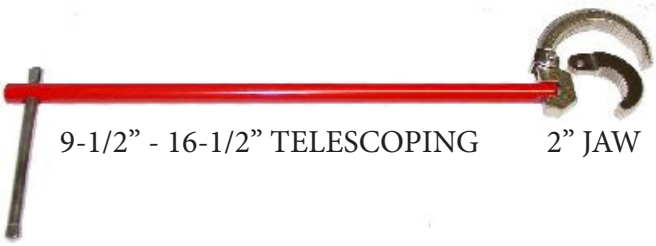

201032

BASIN WRENCH- TELESCOPIC

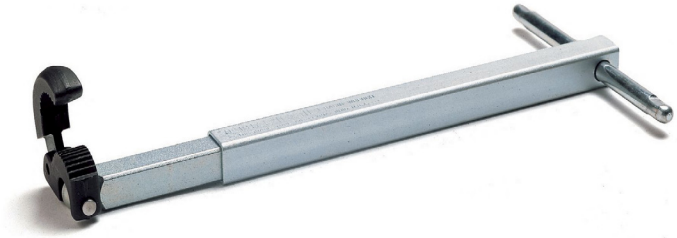

200480

SPUD WRENCH

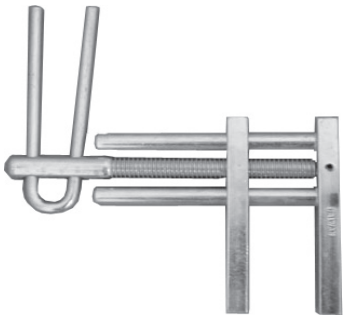

201125

ADJUSTABLE SPUD WRENCH

200215

DUMBELL WRENCH

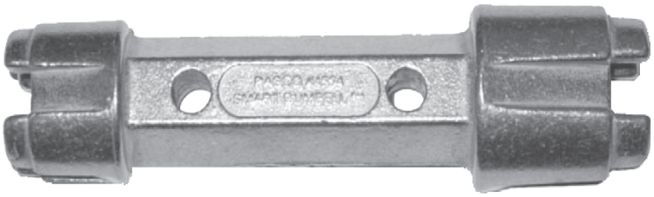

INSTALLS & REMOVES TUB DRAINS AND CLOSET SPUDS. HEAVY DUTY DIECAST. FITS 95% OF ALL TUB DRAINS.

200180

RADIATOR SPUD WRENCH

200190

TUB AND SOCKET WRENCH SET

201060

HEAVY DUTY SHOWER VALVE SOCKET WRENCH

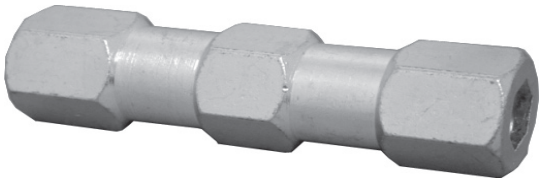

200020 - FOR AMS, COLONY
200390 - FOR SAYCO
200395 - FOR PRICE PFISTER
200400 - FOR KOHLER
201153 - FOR GERBER/STERLING
200052 - FOR INDIANA BRASS

STRAINER WRENCH
(FOR INSTALLING KITCHEN BASKET STRAINERS AND TUB DRAINS WITH CROSS BARS)

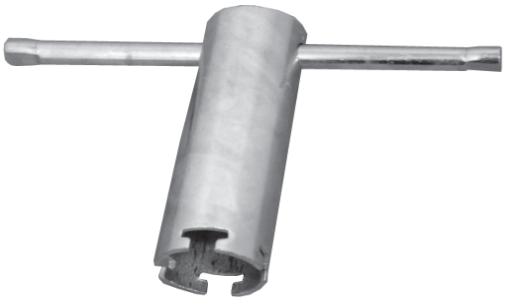

201101

INTERNAL PIPE WRENCH KIT

* FOR REMOVING BROKEN OR FROZEN PIPE NIPPLES AND INSTALLING CHROME PIPE OR CLOSE NIPPLES WITHOUT DAMAGING FINISHES

KIT INCLUDES 1/2", 3/4", 1"
200200 - 1/2"
200205 - 3/4"
200210 - 1"

201252

DRUM TRAP PLUG WRENCH

200009

CLOSET SEAT HINGE NUT WRENCH

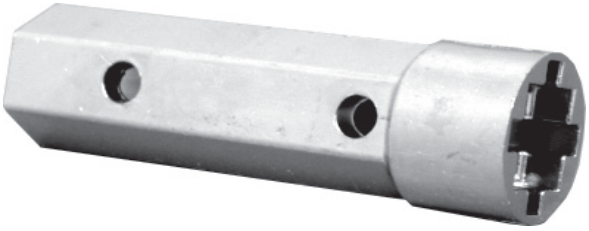

200170

FLUSH VALVE STOP TAILPIECE WRENCH

201106

NO HUB TORQUE WRENCH

200018

COMMERCIAL SINK DRAIN WRENCH
FOR TOP DRAIN FLANGE

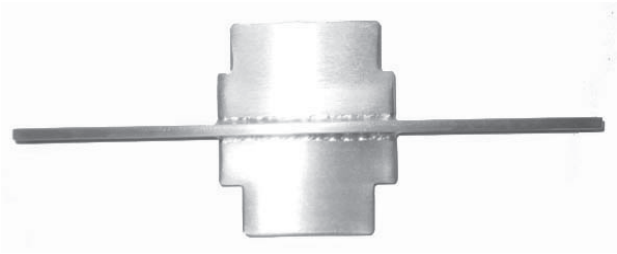

200525

WRENCH FOR DELTA ADJUSTING RING

201159

6 WAY PLUG WRENCH
2 SLOTTED BLADES FOR RECESSED COVERS

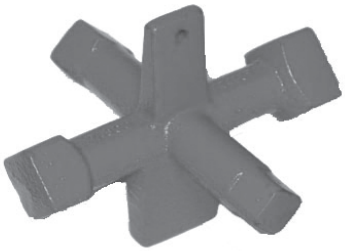

200545

4 WAY P.O. PLUG WRENCH
(FOR INSTALLING & REMOVING BASKET STRAINERS, TUB DRAINS & P.O. PLUGS)

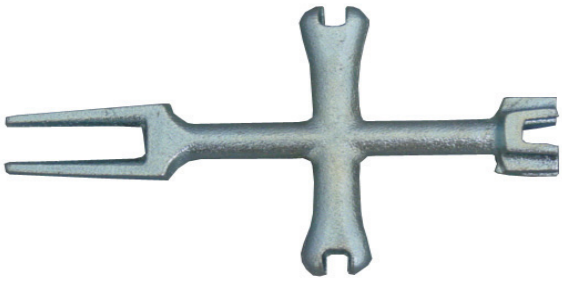

200185

4-WAY LOOSE KEY WRENCH
(HEAVY PATTERN CAST BRASS
3/16", 1/4", 11/32" 1/2" SQUARE STEMS)

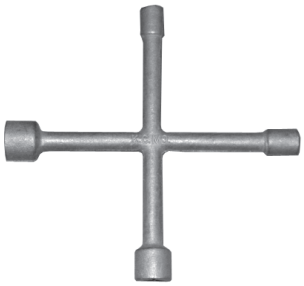

205897

INSIDE EXPANSION PIPE WRENCH

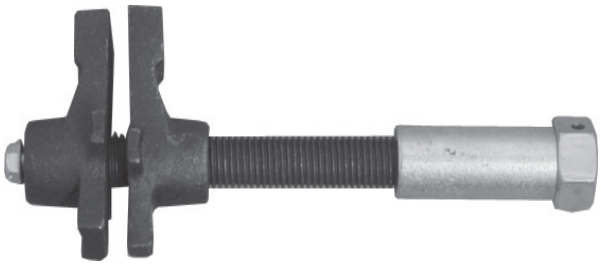

201140

"GRIPZIT" STRAP WRENCH
(USE ON CHROME PARTS PREVENTS MARRING
1/2" TO 4" I.P.S. CAPACITY. LENGTH 7-1/2")

205667

CLEANOUT COVER WRENCH SET
(11 PIECES, 11" SLIDING T-HANDLE)

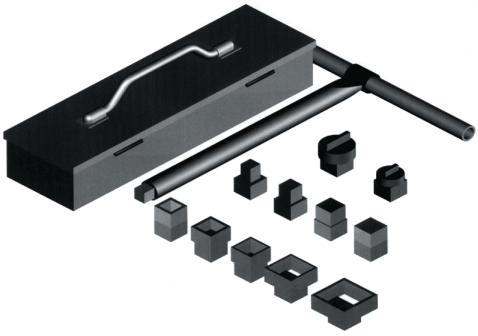

205508

DEEP CUP STRAINER BASKET WRENCH

200250

FLEXIBLE PACKING HOOKS/SET
(FOR EXTRACTING PACKING IN HARD TO REACH AREAS.
SET IS 3 SIZES: 6-1/4", 10-5/8", 15" LONG)

200143

SLOAN "SUPERWRENCH"
FOR ALL SLOAN FLUSHOMETERS - SERVICES
ALL CRITICAL CONNECTIONS & COUPLINGS

200495

HYDRANT / SILCOCK KEYS

DIMENSIONS GIVEN ARE
SQUARE BASE x LENGTH
200735 - 3/16 x 1/2
200720 - 1/4 x 1
200110 - 1/4 x 2-7/8
200111 - 5/16 x 1 FITS WOODFORD
200715 - 5/16 x 2-5/8 FITS WOODFORD
200730 - 5/16 x 2-7/8 FITS WOODFORD
200500 - 7/16 x 3-3/4 FITS ZURN ONLY

200735 - Shown Above

KEY FOR KOHLER STOP VALVE

803595

SOFT JAW SLIP JOINT PLIERS 10-1/2"

*COMES WITH ROUND AND SQUARE JAW INSERTS
*GREAT FOR REPAIR WORK ONFLUSH VALVES
*WILL NOT CRUSH THREADED TAIL PIECES
*GROOVED VINYL JAWS PREVENT SLIPPING

201200

FOUR WAY KEY

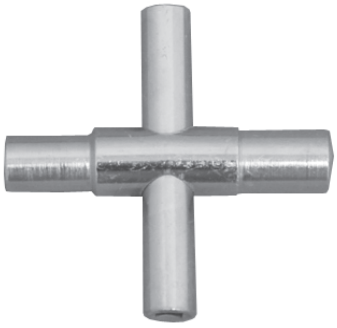

FITS
1/4" , 9/32"
5/16" , 11/32"

200025

SLIP JOINT PLIERS
WITH ANGLE NOSE AND PLASTIC GRIP

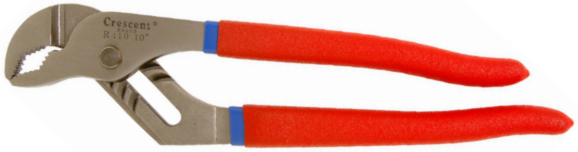

200415 - SAW TEETH JAW TYPE

SLIP JOINT PLIERS

200420 - SMOOTH JAW STYLE (SHOWN ABOVE)
200055 - WITH PIPE WRENCH STYLE TEETH

6

COPPER TUBE BRUSH

200128 - 1/2”
200127 - 3/4”

FITTING BRUSH

200116 - 1/2”
200117 - 3/4”
200115 - 3/8”
206116 - 1”

200115 - Shown Above

4-IN-1 FITTING BRUSH

*HIGH IMPACT PLASTIC
*HIGH CARBON STEEL
*REPLACEMENT BRUSHES
*1/2” x 3/4” COPPER

200129

2 PIECE NUT SPLITTER SET

4” LONG FOR 1/16 - 5/8” NUTS
5” LONG FOR 5/8” - 7/8” NUTS

201141

MOEN STEM/CARTRIDGE PULLER

201152

THE NUTCRACKER

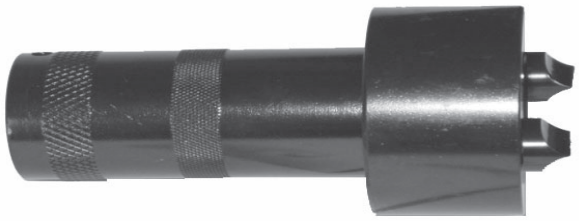

REMOVES CORRODED 1/2” LOCKNUTS FROM FAUCET SHANKS.
USE WITH 3/8” EXTENSION AND RATCHET.

200560

BIBB SCREW REPAIR KIT
(5 PIECE SET - 3 TAPS: 4-40, 8-32, 10-24
HANDLE & CASE)

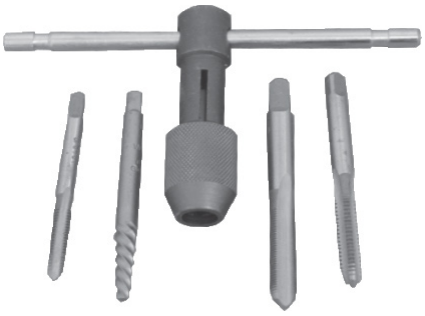

201146

TUB DRAIN REMOVAL TOOL

FOR SPUDS, STRAINER BASKETS, NIPPLES AND
TUB DRAIN SHOE PLUGS

201110

6

TUBING BENDER
(BENDS 1/4", 5/16 AND 3/8" TUBING)

200017

FLARING TOOL
(FOR O.D. SIZES 3/16", 1/4", 5/16", 3/8", 1/2" AND 5/8")

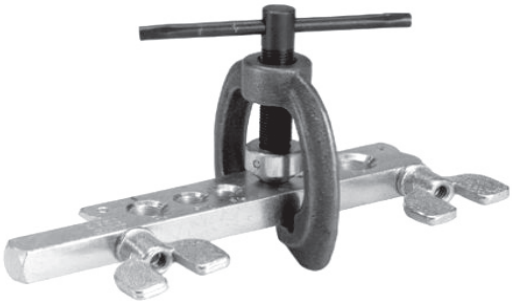

200051

DELUXE COPPER FLARING TOOL
(FOR 3/16" UP TO 5/8" O.D.)

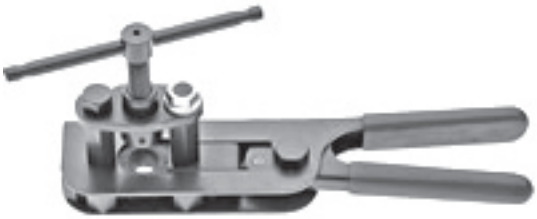

200011

FAUCET SEAT EXTRACTING TOOL
(REMOVES STRIPPED OUT SEATS)

201121

ANGLED SEAT TOOLS

200135 - STEPPED TYPE
200140 - TAPERED TYPE

STEPPED FAUCET SEAT TOOL
(FOR HEX, OCTAGON AND SQUARE BROACHES)

200145

FAUCET SEAT TOOL SET

201030 - DOMESTIC
200220 - IMPORT

ZURN SEAT REMOVAL TOOL

807540

GRIP CUT MESH ROLL
(1-1/2" x 10 YDS)

*Dispenser box
*100% waterproof
*Polyester on both sides
*180 grit with large holes for aggressive sanding
*Can be exposed to water and solvents indefinitely without breakdown

200126

FINE SANDING CLOTH
120 GRIT (1-1/2" x 10 YDS)

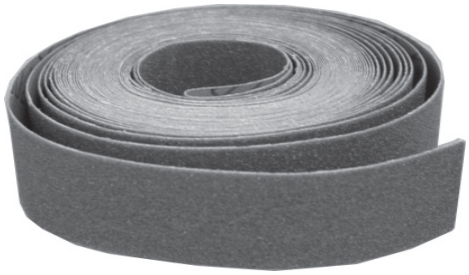

200125

PLUMBER'S OPEN MESH
180 GRIT (1-1/2" x 10 YDS)

200175

TEFLON TAPE

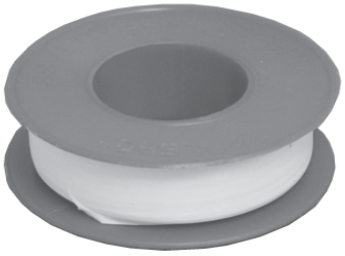

400980 - 1/2" X 520'
400983 - 1/2" X 260' HEAVY MIL, YELLOW
400986 - 1/2" X 520' HEAVY 3 MIL
400987 - 3/4" X 520'

DUCT TAPE
(2" x 60 YD)

940752

ELECTRICAL TAPE
3/4" WIDE x 60' LONG

400989 - BLUE
400988 - RED
400981 - BLACK

POCKET THERMOMETER

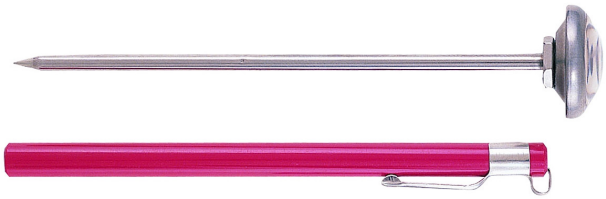

*25 DEGREES F - 125 DEGREES F
*LARGE 1" DIAL FACE

942005

DIGITAL POCKET THERMOMETER

*FROM -58 TO +302 DEGREES F
*DATA HOLD
*AUTO POWER OFF
*BATTERY INCLUDED

008346

6

PIPE REPAIR KIT

PERMANENTLY REPAIR ANY PIPE OR HOSE IN MINUTES! APPLIES LIKE TAPE AND SETS LIKE STEEL
EVEN IN WATER!
WHEN PROPERLY APPLIED WILL WITHSTAND UP TO 180 PSI AND 600 DEGREES FAHRENHEIT
FOR USE ON: COPPER PIPE, STEEL PIPE CAST IRON, & RUBBER HOSE

200147 - FOR PIPE UP TO 1" IN DIAMETER. 2"x 60" ROLL (SHOWN ABOVE)

200148 - FOR PIPE OVER 1" IN DIAMETER. 2"x120" ROLL

LED CORDLESS RECHARGABLE WORK LIGHT

*60 BRIGHT LEDs BRIGHTER THAN ANY LED FLASHLIGHT
*AC CHARGER INCLUDED
*CAN RUN OR RECHARGE OFF 120VAC
*12 VOLT CAR LIGHTER ADAPTER INCLUDED
*2 HOUR RUNTIME AT FULL STRENGTH 4 HOURS UNTIL DEAD
*FULL CHARGE IN 90 MINUTES

407858

MINI HACKSAW

205441

201160 - REPLACEMENT BLADES

METAL RETRIEVER (32" TELESCOPING)

200780

ACS SCREWDRIVER PEN SET

209987

6 IN 1 SCREWDRIVER (ATLANTIC COASTAL SUPPLY, INC. SCREWDRIVER WITH REVERSIBLE TIPS)

200002 - SHOWN **ABOVE**
200003-REPLACEMENT PHILLIPS HEAD BIT ONLY
200004 -REPLACEMENT SLOTTED HEAD BIT ONLY

DISPOSABLE LATEX GLOVES (BOX OF 100)

940003

RHINO SHIELD TEXTURED GLOVES

*NON-SLIP BEADED CUFF
*DOUBLE POLYMER COATING
*TEXTURED FINGERS & PALM
*14 MIL LATEX
*12" CUFF

940962 - LARGE
940963 - EXTRA LARGE
940964 - 2X LARGE

6

HANDHELD DRAIN CLEANER (1/4" x 15' BASIN CABLE)

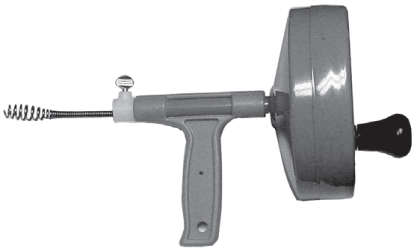

200041 - 15'
200042 - 20'

25FT DRAIN CLEANER WITH DRILL ATTACHMENT (DRILL NOT INCLUDED)

CANVAS DRAIN FLUSHER

203447 - FOR LINES UP TO 1-1/2" (SHOWN ABOVE)
203448 - FOR LINES UP TO 2-1/2"
203449 - FOR LINES UP TO 3"
203551 - FOR LINES UP TO 4"

POWER-VEE (WITH CASE, 50FT x 1/4" (50HE1-DH), 35FT x3/8" (35HE2) CABLES, HECS CUTTER SET AND ONE ADDITIONAL CARTRIDGE. BOXET WT. 39 LBS)

200780

DRAIN KING (LINE OPENER FOR USE WITH GARDEN HOSE)

200510 - 1"- 2" LINES
200515 - 1-1/2"- 3" LINES (SHOWN ABOVE)
200520 - 3"- 6" LINES

JET SWET KIT (USED TO SWEAT COPPER FITTINGS ON EXISTING LINES WHERE EXCESS WATER PROHIBITS A PROPER SEAL AT SWEAT JOINT)

***206108 - KIT WITH CASE AND 6 SIZES**
ITEMS MARKED WITH * ARE INCLUDED IN THE JET SWET KIT

JET SWET TOOLS
***208825** - 1/2"
***208826** - 3/4"
***208830** - 1"
***208831** - 1-1/4"
***208832** - 1-1/2"
***206104** - 2"
208827 - 2-1/2"
208828 - 3"
208829 - 4"

REPLACEMENT RUBBERS
008015 - 1/2"
008019 - 3/4"
008071 - 1"
008072 - 1-1/4"
205500 - 1-1/2"
008073 - 2"

PVC CUTTING SAW (13" BLADE, CUTS TO FLOOR LEVEL, & COMFORT HANDLE)

206981

6

SOLDER

700121 - STERLING, 100% LEAD FREE 95-5
200750 - SOLDER FLUX COMBO 50/50
200760 - 97/3 (CONSIDERED LEAD FREE)

SOLDERING PASTE

700154 - 9oz

LA-CO FLUX

700120 - 4oz.

LA-CO 50/50 SOLDER & FLUX

700065 - 4oz

OATEY No. 5 PASTE FLUX

205200 - 8oz

50/50 SOLDER & FLUX

200750 - 1lb ROLL

95/5 SOLDER

200760 - 1lb ROLL

STERLING 100% LEAD FREE SOLDER

700121 - 1lb ROLL

ACID BRUSH
3/8" WITH METAL HANDLE

200118

KORKY PLUNGER WITH HOLDER **100490**	HEAVY DUTY PLUNGER **204021**	FORCE CUP **100018 - KIRKHILL**
SEALMASTER FORCE CUP **100017**	ALL PURPOSE ACCORDIAN STYLE PLUNGER **100011**	MINI HAND-HELD PLUNGER **100217**
FREE FLO 6" FORCE CUP WITH 21" HANDLE **100015**	KORKY TOILET PLUNGER **100016**	LAVATORY FORCE CUP 4" HEAVY DUTY **100003**
LAVATORY PLUNGER **100894**	BULL DOG PLUNGER **206347**	HEAVY DUTY WIDE MOUTH SERVICE BAG **307689**

AIR CONDITIONING-REFRIGERATION DRAIN MAINTENANCE TABLETS

700110 - 2-3/4" x 2-1/4" x 1/2".
3/4oz FOR HOTEL/MOTEL UNITS AND ALL UNITS UP TO 5 TONS

700111 - 3-5/8" x 2-3/4" x 7/8".
2-1/8oz FOR UNITS FROM 5 TO 15 TONS

CONTROLS:
SLIME BUILD-UP AND CONSEQUENT DRAIN PAN OVERFLOWS THE GROWTH OF HARMFUL BACTERIA, INCLUDING THOSE THAT CAUSE LEGIONNAIRE'S DISEASE MUSTY ODORS INTRODUCED INTO AIR HANDLING UNITS FROM BACTERIAL SLIME ACCUMULATION
DESIGNED TO NOT CLOG DRAINS

A/C TABS JR. HUMIDIFIER AND AIR CONDITIONER TREATMENT

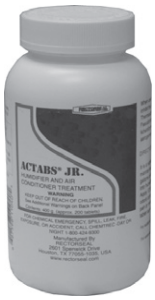

CONTROLS ODOR AND GROWTH OF SLIME THROUGH BACTERIOSTATIC ACTION IN DRAIN PANS AND RESERVOIRS

700450 - 400g BOTTLE (APPROX. 200 TABLETS)

CONDENSATE LINE CLEANER PROFESSIONAL SERIES

205207
704112 - 4.5oz CAN ONLY

PRESSURE PLUMBER INSTANT DRAIN OPENER

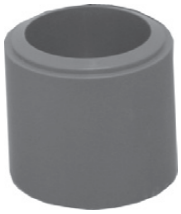

200902 - 10.5oz CAN
704114 - PRESSURE PLUMBER CAP ONLY

IRON OUT RUST REMOVER

REMOVES RUST AND STAINS FROM TOILETS, SINKS, TUBS, WHITE CLOTHES, WATER SOFTENERS AND MUCH MORE

700105 - 18oz BOTTLE

LIQUID ENZYMATIC DRAIN CLEANER

FOR TREATING AND CLEANING DRAINS, GREASE TRAPS, GARBAGE DISPOSAL UNITS, SEPTIC SYSTEMS & DRAIN FIELDS.

NON-TOXIC
NON CORROSIVE
CONCENTRATE

700050 - 5 GALLON BUCKET WITH SPOUT
700024 - CASE (12 QUARTS PER CASE)

PROFESSIONAL USE FIN & COIL CLEANER FOR REFRIGERATION CONDENSERS

205580 - 20oz AEROSOL CAN

SEAL-OUT
PRESERVES THE SEPTIC SEAL AND PREVENTS SEWER GASSES AND ODORS FROM ENTERING THROUGH THE TRAP

700029 - CASE (12 QUARTS)

RED HOT SEWER SOLVENT GRANULAR
USE REGULARLY ON SEWER DRAIN LINES TO KEEP LINES CLEAN

701445 - 5 GALLON BUCKET
DUE TO GOV. REGULATIONS, EXTRA SHIPPING CHARGES WILL APPLY

SWIFT
SWIFT IS AN ODORLESS PRODUCT THAT SOLVES FOUR MAJOR DRAIN PROBLEMS.
FOR USE IN:
SMALL DRAINS, GREASE TRAPS
SEPTIC SYSTEMS, ROOT CONTROL

700130 - 1LB CANS (24/CASE)
700131 - 2LB CANS (12/CASE)
*SOLD BY THE CASE ONLY

CALCI-SOLVE
DISSOLVES RUST & MINERAL DEPOSITS
URINAL SALTS EVEN DISSOLVES CONCRETE

700060
4 GALLONS PER CASE
SOLD BY THE CASE ONLY
DUE TO GOV. REGULATIONS, EXTRA SHIPPING CHARGES WILL APPLY

AGENT ORANGE
NATURAL MULTI-PURPOSE CITRUS SOLVENT.
CAN BE USED FOR:
GENERAL CLEANING, GREASE TRAPS, CHROME FIXTURES, AND MANY, MANY OTHER USES

700028 - CASE (12 QUARTS)

BLUE THUNDER
DRAIN CLEANER. SULFURIC ACID, FAST ACTING FOR TOUGHEST STOPPAGES

700064 - CASE (12 QUARTS)

ECO POW GREEN
FOR CUTTING GREASE IN TRAPS AND LINES

700062 - CASE
4 GALLONS PER CASE
*SOLD BY THE CASE ONLY

ONE SHOT

700063
WITH ODOR BLOCKER
12 PINTS PER CASE
*SOLD BY THE CASE ONLY

HOSPITAL ALKALI DRAIN OPENER

700030 - CASE (12 QUARTS)

END RUST
RUST AND STAIN REMOVER
QUICKLY DISSOLVES RUST AND RUST STAINS ON VIRTUALLY ALL MATERIALS

700079 - 20 oz.

6

6

LIQUID NAILS CAULK **700012** - 10oz	POLYSEAM SEAL, WHITE (MILDEW RESISTANT) **700020** - 10oz	PLUMBER'S CAULK SQUEEZE TUBE **700074** - 6oz WHITE **700076** - 6oz ALMOND	100% SILICONE CAULK, WHITE **700018** - 10oz
TUB & TILE CAULK (MILDEW RESISTANT) **700055** - 6oz **700075** - 10.5oz	PVC CEMENT MED/ GREY **700210** - 32oz	PURPLE PRIMER **700200** - 1QT **700193** - 8oz **700192** - 4oz	PVC CEMENT **700090** - 1 PINT(16oz.)
PVC ONE STEP CEMENT **700091** - 1 PINT(16oz.)	PVC/CPVC ALL PURPOSE **700092** - 8oz **701251** - 1 PINT(16oz.)	RAIN-R-SHINE BLUE PVC CEMENT **700047** - 8oz. **703650** -1 PINT(16oz.)	PVC HEAVY DUTY CLEAR CEMENT **404624** - 32oz **700205** - 1 PINT(16oz.)
PVC ALL PURPOSE CLEANER **700095** -1 PINT(16oz.)	NO-DRIP PIPE JOINT COMPOUND **700038** - 2oz	STEM LUBE **700006** - 2oz	FAUCET AND VALVE GREASE **700044** - 1oz

EPOXY-EASE PUTTY 4oz **700045**	PRESSTO CELL - 1 PINT **403394**	LIQUID WRENCH 11oz **700025**	PVC SHOWERPAN LINER - 1 PINT **704471**
PRO DOPE 1/2 PINT **700215**	HERCULES PIPE DOPE WITH BRUSH IN CAP 8oz **700123**	REAL-TUFF TEFLON PASTE THREAD SEALANT 4oz **700040**	ANAEROBIC PIPE & THREAD SEAL 1.69oz **700070**
SILICONE SPRAY 11oz **700005**	**700014** - MEGALOC THREAD SEALANT - 4oz **700016** - MEGALOC 8oz	**206654**- RECTOR SEAL 8oz **700043** - RECTOR SEAL - 1 PINT	**700010** STAINLESS PUTTY 14oz. **700011** STAINLESS PUTTY 5lbs
RUST BUSTER 4oz **700100**	PORCELAIN TOUCH UP GLAZE - 0.5oz **940790**		

6

6

ACS O RING KITS

804218 - 450 PIECES OF THE 46 MOST COMMONLY USED O-RINGS **(PICTURED ABOVE)**
800048 - OVER 382 PIECES , 30 DIFFERENT SIZES
200490 - O-RING PICK

SEAT KIT

805906 - CONTAINS 30 SIZES 150 TOTAL PIECES WITH BARRELS AND THREAD GUAGE PLASTIC CARRYING CASE

ACS O-RING KIT

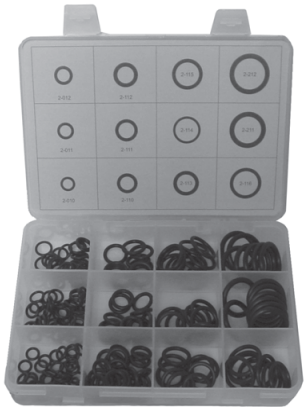

800080 - SMALL ASSORTED O-RING KIT 14 SIZES/ 200 PIECES

ACS WASHER KITS

800084 - 144 TEFLON WASHERS ASSORTED SIZES
800087 - 200 FLAT WASHERS ASSORTED SIZES **(PICTURED ABOVE)**
807931 - BEVELED WASHERS ASSORTED SIZES
800086 - 200 FLAT/BEVELED COMBO WASHERS IN ASSORTED POPULAR SIZES

WASHER RETAINER KIT

801001 - 120 PIECES
3 BIBB SCREW SIZES
9 RETAINER SIZES
ALL BRASS

SCREW KITS

800020 - 150 PIECE, 12 POPULAR SIZES, HANDLE SCREWS, CP BRASS
805760 - 300 PIECE, 10 POPULAR SIZES BRASS BIBB SCREWS **(PICTURED ABOVE)**
800025 - 220 PIECES, 12 POPULAR SIZES MONEL SCREWS

150 PIECE WING NUT KIT

QTY - SIZE
(30) - 10-24, 3/16
(30) - 10-32, 3/16
(25) - 1/4-20
(25) - 1/4-28
(20) - 5/16-18
(20) - 5/16-24

206557

150 PIECE HAIR PIN ASSORTMENT KIT

(QTY) - SIZE
(8) - 5/32” x 3”
(20) - 9/64” x 2”
(25) - 3/32” x 1-5/8”
(25) - 1/16” x 1-9/16”
(25) - 1/16” x 1-5/16”
(42) - 5/64” x 1-1/4”

206593

225 PIECE RETAINING RING KIT

CONTAINS 18 DIFFERENT RING SIZES FROM 7/16” TO 1/4”

206556

555 PIECE COTTER PIN ASSORTMENT KIT

QTY - SIZE
(150) - 1/16” x 1”
(150) - 3/32” x 1”
(100) - 3/32” x 1-1/2”
(75) - 1/8” x 1-1/4”
(50) - 1/8” x 2”
(30) - 5/32” x 2-1/2”

206594

30 PIECE SCREWDRIVER SET

SCREWDRIVER SET WITH ASSORTED STAR TYPE BITS
***MAGNETIC SCREWDIRVER WITH STORAGE HANDLE**
***1/4” BIT HOLDER**
***SQUARE AND HEX MALE ADAPTOR**
***5 HEX BITS- 3/32, 1/8, 5/32, 3/16, 7/32**
***6 STAR BITS- T10, T15, T20, T25, T30, T40**
***5 SLOT BITS- 1/8, 5/32, 3/16, 7/32, 1/4**
***4 PHIL BITS- #0, #1, #2, #3**
***4 SQUARE BITS- #0, #1, #2, #3**
***2 POZI BITS- #1, #2**

200503

PHILLIPS PAN HEAD SCREW KIT

16 SIZES

807817

6

VANDAL PROOF SCREWDRIVER SET

MAGNETIC SCREWDIRVER WITH STORAGE HANDLE
***1/4" BIT HOLDER**
***1/4" SQUARE AND HEX MALE ADAPTOR**
***10 TAMPER RESISTANT HEX BITS- 3/32, 1/18, 9/64,5/32, 3/16, 7/32, 1/4, 2.5mm, 3mm, 5mm**
***9 TAMPER RESISTANT BITS- T8, T9, T10, T15, T20, T27, T30, T40**
***6 SPAMMER BITS- #4, #6, #10, #12, #14**
***1 PHIL BIT- #2**

200507

SLIP JOINT WASHER KIT

(6) 1-1/4" SLIP JOINT WASHER- FLANGED
(48) 1-1/2" MALE SLIP JOINT WASHER
(12) 1-1/2" SLIP JOINT WASHER
(48) 1-1/4" SLIP JOINT WASHER
(12) 1-1/4" x 1-1/2" SLIP JOINT WASHER
(6) 1-1/4" POLY SLIP JOINT WASHER
(6) 1-1/2" BEVELED POLY SLIP JOINT WASHER
(6) 1-1/2" FLANGED POLY WASHER
(12) 2" SLIP JOINT WASHER
(24) 1-1/2" SLIP JOINT WASHER
(12) 1-1/4" SLIP JOINT WASHER

802099

STEM PACKING ASSORTMENT

33 DIFFERENT SIZES
300 TOTAL PIECES

800021

CAP THREAD & TOP BIBB GASKET ASSORTMENT

CONTAINS 15 DIFFERENT GASKETS
200 TOTAL PIECES

800840

TORX TAMPER PROOF SECURITY BIT KIT

20 SIZES
COMES WITH TORX DRIVER AND BITS

206292

CLOSET AUGER BAG ONLY

204704

1-1/4" SIDE CUTTER BLADES FOR CUTTING AND SCRAPING FOR 5/16" AND 3/8" CABLE

204510

FLEXIBLE LEADER - 13" LONG ATTACH TO 1/2" WIRE ROPE CENTER SNAKES TO GO THROUGH "P" TRAPS AND OTHER CLOSE BENDS. FOR 3/8 AND 1/2" CABLE

000640

ARROWHEAD STARTING DRILL FOR 5/16", 3/8", 1/2 CABLE

204508

DOWN HEAD BORING GIMLET GOES DOWN WASTE, NOT UP THE STACK FOR 5/16" AND 3/8" CABLE

200078

METAL CARRYING CASE FOR SUPER-VEE, POWER-VEE AND HANDYLECTRIC

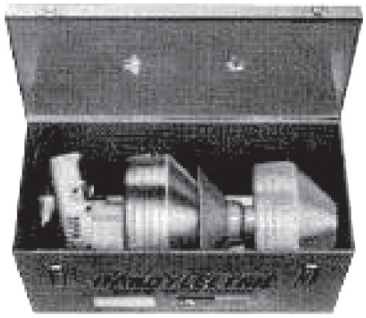

204511

FLEXIBLE ARROW HEAD FOR SHARP TURNS IN SMALL LINES FOR 5/16" AND 3/8" CABLE

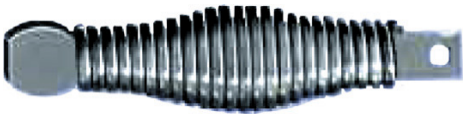

204509

BORING GIMLET FOR REMOVING LOOSE OBJECTS FOR 5/16" AND 3/8" CABLE

200076

SMALL CORKSCREW RETRIEVING TOOL. FOR REMOVING LOOSE OBJECTS FOR 3/8" AND 1/2" CABLE

207886

1-1/2" U-CUTTER FOR CUTTING AND SCRAPING FOR 3/8" AND 3/8" CABLE

002030

CLOSET AUGER ATTACHMENT GUIDES 1/4" OR 5/16" CABLE INTO BOWL

204513

SIDE CUTTER BLADES (2 PIECE SET) FOR CUTTING AND SCRAPING FOR 1/2", 5/8" AND 3/4" CABLE

201036 - 3"
201037 - 4"

DOWN HEAD FITTING CAN BE USED WITH ALL STANDARD HANDYLECTRIC CUTTERS FOR 5/16" AND 3/8" CABLES

200077

SNAKE OIL- PROTECTS YOUR CABLES BETTER THAN COMMON LUBRICANTS. ITS SPECIAL RUST INHIBITOR CUTS THROUGH MOISTURE AND REPLACES IT WITH A RUST-RESISTANT COATING. IN ADDITION, SNAKE OIL GIVES YOUR EQUIPMENT A FRESH, CLEAN SMELL.

700002 - 1QT,
700007 - 1GAL.

1/4" AND 5/16 DOWN HEAD LEAD CABLE DOWN THE STACK- NOT UP FOR 1/4" AND 5/16" CABLE

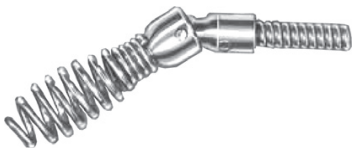

201154

2" U-CUTTER FOR CUTTING AND SCRAPING FOR 1/2", 5/8" AND 3/4" CABLE

200083

SECTION SEVEN
TOILET/URINAL REPAIR

WAX SEAL W/ FLANGE FOR 3" AND 4" EXTRA THICK JUMBO JOHNI RING PLUS ORANGE & WHITE BOX 1-1/4" THICK WAX

100023

WAX SEAL FOR WALL HUNG TOILETS - WALL 3" AND 4" OEM - NO SEEP NO.2 1-1/8"THICK WAX

100372

WAX SEAL W/FLANGE 3" AND 4" STANDARD/UNIVERSAL FLOOR 3" AND 4" OEM G-237

100025

WAX SEAL REGULAR, REINFORCED 7/8" THICK JOHNI RING IN BLUE & WHITE BOX

100024

WAX SEAL W/ FLANGE FOR 3" AND 4" HEAVY DUTY URETHANE REINFORCED BOWL RING WITH SLEEVE FOR ALL TYPES OF TOILET BOWLS

200673

WAX SEAL FLOOR 3" AND 4" REGULAR ANCHOR RAD BOWL RING 7/8" THICK WAX

100030

WAX SEAL FOR URINAL FOR WALL/URINAL URETHANE REINFORCED 2" DIAMETER x 1" THICK OEM - BOL WAX NO. 6

100370

WAX SEAL, REGULAR FLOOR 3" AND 4" OEM - BOL WAX NO. 1 1" THICK WAX

100387

WAX GASKET W/ FLANGE FOR 3" AND 4" WALL/FLOOR MOUNT COMMODES NO-SEEP NO. 3

100839

EXTRA THICK WAX GASKET FOR 3" AND 4" FLOOR CLOSET ONLY NO-SEEP NO. 10

100704

WALL HUNG HARD SPONGE RUBBER GASKET 5-5/16" O.D. X 3-9/16" I.D. 3/4" THICK

920375

CLOSET BOWL SPONGE RUBBER CUSHION RINGS 3-1/4" I.D. 7" O.D. 3/4" THICK, EXTRA WIDE

407745

IMPREGNATED FELT WAX URINAL GASKET 2" I.D. 3-5/8" O.D. 3/4" THICK

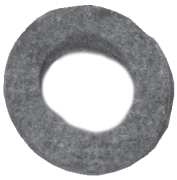

407139

TOILET REPAIR FLANGE CAN BE USED IN ALL CLOSET FLANGE REPAIR SITUATIONS

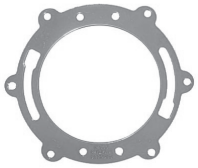

100888

WALL HUNG COMMODE GASKET - 5-5-16" OD x 3-9/16" I.D. 3/4" THICK

400182

WAX FREE TOILET SEAL FITS 4" DRAIN PIPES & ALL FLOOR TYPES

404578

WAX FREE TOILET SEAL FITS 3" DRAIN PIPES & ALL FLOOR TYPES

404577

DEOD-O-SCREEN EFFECTIVE ODOR CONTROL FOR UP TO 60 DAYS ONE SIZE FITS ALL

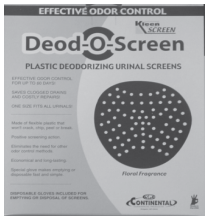

940555

ANCHOR FLANGE KIT REPAIRS BROKEN CLOSET FLANGES, STABILIZES TOILET, INCLUDES: WASHERS, ANCHORS, SCREWS, AND INSTRUCTIONS

100036

PLASTIC SHIM IDEAL FOR LEVELING CLOSET BOWLS

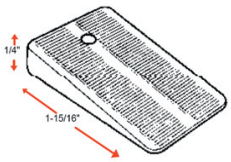

942011H- HARD
9420111S- SOFT

PVC SCHEDULE 40
4” x 3” OFFSET CLOSET FLANGE
360 DEGREE FLEXIBILITY HUB
FITS OVER 3” PIPE

100902

406840 - PVC SCHEDULE 40
CLOSTE FLANGE HUB
4” x 3” FITS OUTSIDE 3” PIPE
404794 - SAME WITH
KNOCKOUT

CLOSET FLANGE WITH
METAL RING. FITS
OUTSIDE 3” PIPE AND INSIDE
4” PIPE

406290

ABS SCHEDULE 40
4” x 3“ CLOSET FLANGE
W/ KNOCK OUT
FITS OVER 3” PIPE

805777

TWO FINGER PUSH FLANGES
PVC TOILET FLANGE
001063 - 4”x 3”
100157 - 3”x 3”

OATEY TWIST & SET
CLOSET FLANGE FITS
INSIDE 4” PVC PIPE

404796

J-TECH CLOSET FLANGE
PVC PLASTIC COMPRESSION CLOSET FLANGE. REPLACESCAST IRON CLOSET FLANGES. TIGHTENS DOWN INSIDE OF 4” PIPE W/ 3” STAINLESS STEEL BOLTS. SLIDES INSIDE OF 4” CAST IRON OR DWV PLASTIC PIPE

100355

PVC 3” SCHEDULE 40
CLOSET FLANGE
FITS INSIDE SCHEDULE 40
DWV PIPE

100861

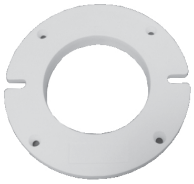

CLOSET FLANGE EXTENSION
FOR REPAIRING, REPLACING
OR RETILING BATHROOM
FLOOR - 1/4” THICK, DURABLE
ABS

100855

URINAL FLANGE 2
PVC-SOCKET

408245

PVC URINAL FLANGE-SPIGOT

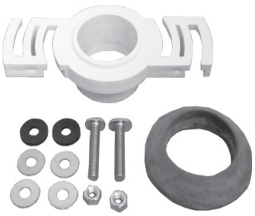

408200

CLOSET FLANGE SUPPORT KIT

100815 -
FLANGE FIXER
FITS PVC PIPE

100820 -
FLANGE FIXER
FITS CAST IRON PIPE

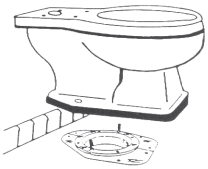

FOR REPAIRING
WOBBLY AND
LOOSE CLOSET
FLANGES
WITHOUT
REPLACING FLOORS.
SAVES TIME AND
MONEY ON
FLOOR AND
PLUMBING REPAIRS.

CLOSET FLANGE EXTENSION KIT

407002-
(3) 1/4” SELF-SEALING EXTENDERS
(2) 3-1/2” T-BOLTS WITH WASHERS & NUTS

CAST IRON NO CAULK CLOSET FLANGE

100895 - 3” PIPE x 2” DEPTH. FITS OVER 3” PIPE
100880 - 4” PIPE x 2” DEPTH. FITS OVER 4” PIPE
100056 - 4” PIPE x 3” DEPTH. FITS OVER 4” PIPE
100896 - 4” PIPE x 4” DEPTH. FITS OVER 4” PIPE

4 STAINLESS STEEL BOLTS & WASHERS
NEOPRENE GASKET MEETS ASTMC564
REDUCES INSTALLATION TIME BY UP TO 80%
IDEAL FOR REPAIRS & NEW CONSTRUCTION
FITS CAST IRON & PLASTIC PIPE
PUSH OVER PIPE, ANCHOR TO FLOOR & TIGHTEN BOLTS

SPANNER
FLANGE

100055

WALL HUNG TOILET STABILIZER SEAL GASKET
18” x 19” x 1/4” - WHITE

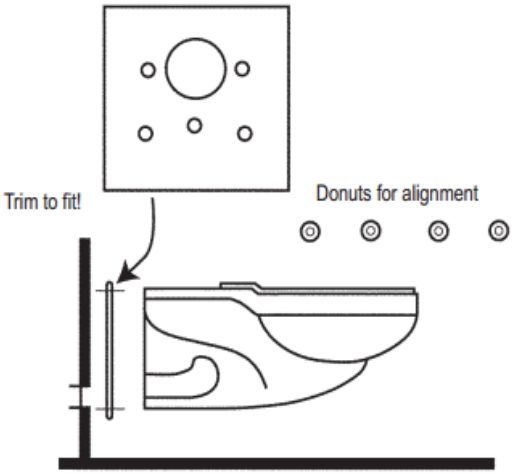

*TP RUBBER CONSTRUCTION CREATES A TOTAL SEAL

*SELF FORMING MATERIAL ELIMINATES WOBBLES AND ROCKING

*TRIM WITH ORDINARY RAZOR BLADE KNIFE

*GREATLY REDUCES RISK OF CRACKED BOWLS

*PROTECTS AGAINST CRACKED MOUNTING

*AVAILABLE IN STD WHITE CUSTOM COLORS UPON REQUEST

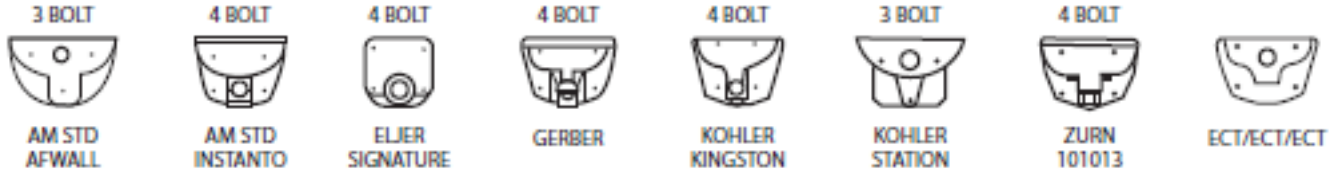

942543 - BIG FOOT IV (SOFT WALL GASKET - SELF-SHIMMING)

7

TOILET/BIDET FLOOR GASKET
31” x 13” x 1/4” WHITE
WORKS WITH TOILETS - 4.5 GPF THRU 1.6 GPF

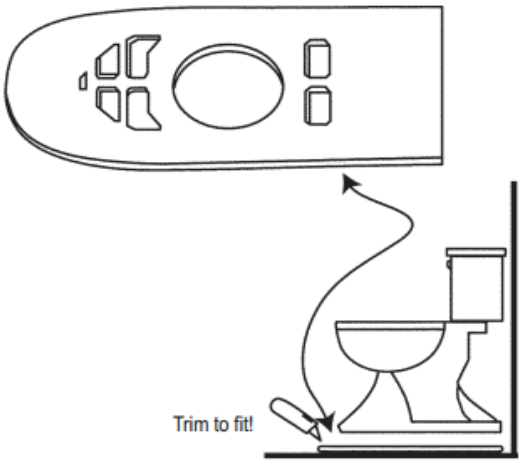

*TP RUBBER CONSTRUCTION CREATES A TOTAL SEAL

*SELF FORMING MATERIAL ELIMINATES WOBBLES AND ROCKING

*TRIM WITH ORDINARY RAZOR BLADE KNIFE

*GREATLY REDUCES RISK OF CRACKED BOWLS

*PROTECTS AGAINST CRACKED MOUNTING

*AVAILABLE IN STD WHITE CUSTOM COLORS UPON REQUEST

942541 - BIG FOOT II (SOFT WALL GASKET - SELF-SHIMMING)

CLOSET BOLT WASHERS

100268 - ROUND

100265 - OVAL

BOLT KITS -TANK TO BOWL (PAIR)

100080 - COMES WITH WASHERS, HEX NUTS AND WING NUTS
100233 - KIT WITH TANK TO BOWL GASKET
940756 - ZINC PLATED WING NUT ONLY
940755 - WASHER ONLY

DELUXE TANK TO BOWL KIT WITH UNIVERSAL TANK GASKET AND LARGE BRASS FLAT HEAD BOLTS

100226 - KIT WITH GASKET AND BOLTS
100388 - TANK BOLTS W/ 7/8" HEAD (PAIR)
100225 - 3 BOLT MANSFIELD KIT WITH GASKET
100026 - MANSFIELD TANK TO BOWL GASKET ONLY

CLOSET BOLTS (PAIR) (SOLID BRASS UNLESS OTHERWISE NOTED)

100260 - 5/16" x 2-1/4" WITH LARGE OVAL HEAD
100075 - 5/16" x 2-1/4" BREAK-OFF TYPE
100164 - 5/16" x 3-1/2"
100261 - 1/4" x 2-1/4" WITH SMALL OVAL HEAD
100259 - 1/4" x 2-1/4" BREAK-OFF TYPE
100262 - 1/4" x 3-1/2"
104370 - 5/16" x 2-1/2" PVC WITH NUT
100269 - 5/16" x 2-1/2" PVC WITH HEX CAP

STABILIZER WASHERS (NOT SHOWN)
100266 - PVC FOR 1/4" BOLT
100267 - PVC FOR 5/16" BOLT

CLOSET BOLT NUTS ONLY OPEN END

100270 - 5/16" x 7/16" NP STEEL NUT
100264 - 5/16" x 1/2" NP BRASS NUT
100263 - 1/4" x 1/2" NP BRASS NUT

TOILET BOLT CAPS-PAIR

100230 - TOILET BOLT CAPS (PAIR)

100268 - ROUND WASHER TO BE USED WITH BOLT CAPS. STAINLESS STEEL

7

COMPLETE SPUDS

100060 - 1-1/2" x 1-1/2"
100065 - 1-1/4" x 1-1/4" URINAL
100063 - 2" x 2"
100064 - 1" x 3/4" URINAL
100067 - 1-1/2" x 1-1/4"
100068 - 2" x 1-1/4"
100069 - 2 x 1-1/2"
100066 - 1-1/4" x 3/4" URINAL
100350 - 1-1/2" x 3/4" URINAL

BRASS SPUD NUT ONLY

407007 - 1-1/2" x 1-1/2"
806030 - 1-1/4" x 1-1/4" URINAL
401251 - 2" x 2"
806148 - 1" x 3/4" URINAL
806043 - 1-1/2" x 1-1/4"
806147 - 1-1/4" x 3/4" URINAL

SPUD GASKET ONLY

100061 - 1-1/2"
100062 - 1-1/4"
920024 - 2"
409100 - 2" x 1-1/2"
404411 - 1-1/4" x 3/4"
404420 - 1" x 3/4"
402000 - 2" x 1-1/4"

URINAL PLUGS (FOR CERAMIC URINALS)

920050 - KOHLER - 5/8" WIDE x 3/4" LONG
920055 - AMERICAN STANDARD/ KOHLER 3/4" WIDE x 3/4" LONG

BRASS FRICTION RINGS FOR SPUDS

100620 - 1-1/4"
100625 - 1-1/2"
100626 - 2"

GALVANIZED FRICTION RINGS FOR SPUDS

100071 - 1-1/4"
100070 - 1-1/2"
100313 - 1" x 3/4"
100312 - 2"
100310 - 2" x 1-1/4"
100311 - 2" x 1-1/2"

AMERICAN STANDARD OUTLET CONNECTION

407942 - 1-1/2" FIP x 2" MIP URINAL CONNECT
406856 - HARDWARE KIT
802485 - GASKET ONLY

AMERICAN STANDARD OUTLET CONNECTION

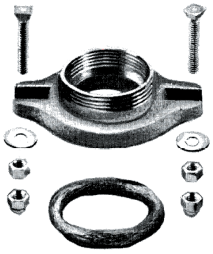

408027 - 2" FIP URINAL CONNECT
406856 - HARDWARE KIT
802485 - GASKET ONLY

AMERICAN STANDARD OUTLET CONNECTION

406864 - 2" FIP URINAL CONNECT
802485 - GASKET ONLY

KOHLER URINAL OUTLET

100635 - 1" x 3/4"(TRADE SIZE) URINAL SPUD WITH FLOW CONTROL
406923 - 1-1/4" x 1-1/4"(TRADE SIZE) URINAL SPUD WITH FLOW CONTROL

STRAINER ASSEMBLY

805772 - COMPLETE STRAINER ASSEMBLY

KOHLER URINAL OUTLET

805773 - 2" FIP URINAL OUTLET SPUD

URINAL OUTLET GASKET

407123 - 5/8" THICK, 3-1/4" O.D. 2" I.D. (OEM/ORANGE).
100307 - 1-1/16" THICK, 3-1/4" O.D. 2" I.D. FOR DEEP URINAL ROUGH-IN
407139 - FELT-WAX IMPREGNATED GASKET. 3-5/8" O.D. 2" I.D. 3/4" THICK SQUARE CUT.

COMPLETE SPUDS

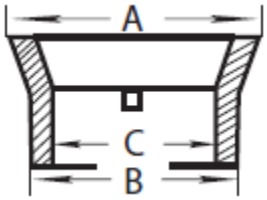

PART NO.	TRADE SIZE	A	B	C
100065	1-1/4” x 1-1/4”	1-29/32”	1-5/8”	1-3/8”
100060	1-1/2” x 1-1/2”	2-3/16”	2-3/16”	1-9/16”
100063	2” x 2”	2-5/8”	2-5/16”	2-1/16”
100064	1” x 3/4” URINAL	1-9/16”	1-1/32”	25/32”
100067	1-1/2” x 1-1/4”	2-3/16”	1-5/8”	1-3/8”
100068	2” x 1-1/4”	2-5/8”	1-5/8”	1-3/8”
100069	2” x 1-1/2”	2-5/8”	1-13/16”	1-5/8”
100066	1-1/4” x 3/4” URINAL	1-15/16”	1-1/32”	27/32”
100350	1-1/2” x 3/4” URINAL			

SPUD GASKET ONLY

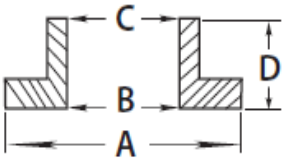

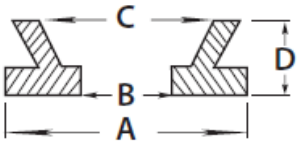

PART NO.	TRADE SIZE	A	B	C	D
100061	1-1/2”	2-9/16”	1-7/8”	1-15/16”	5/8”
100062	1-1/4”	2-15/32”	1-5/8”	1-11/16”	9/16”
920024	2”	3-3/16”	2-5/16”	2-7/16”	11/16”
409100	2” x 1-1/2”	3-3/32”	1-7/8”	2-5/8”	6/16”
404411	1-1/4” x 3/4”	2-13/32”	1-5/16”	2”	9/16”
404420	1” X 3/4”	2-3/16”	1-1/16”	1-5/8”	9/16”
402000	2” x 1-1/4”	3-3/32”	1-5/8”	2-9/16”	9/16”

JOSAM WALL HUNG CARRIER UNIT

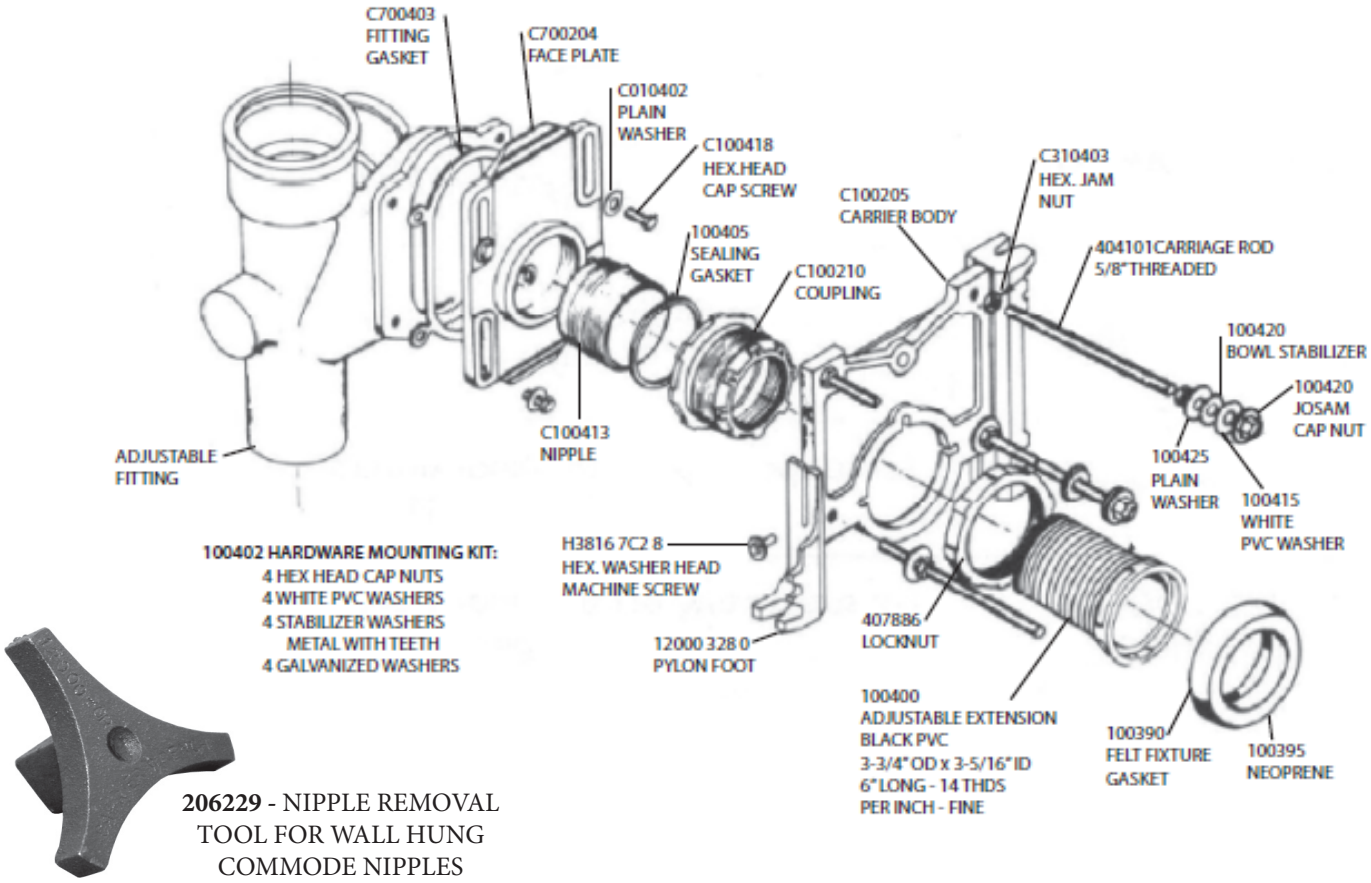

206229 - NIPPLE REMOVAL TOOL FOR WALL HUNG COMMODE NIPPLES

7

ZURN WALL HUNG CARRIER UNIT

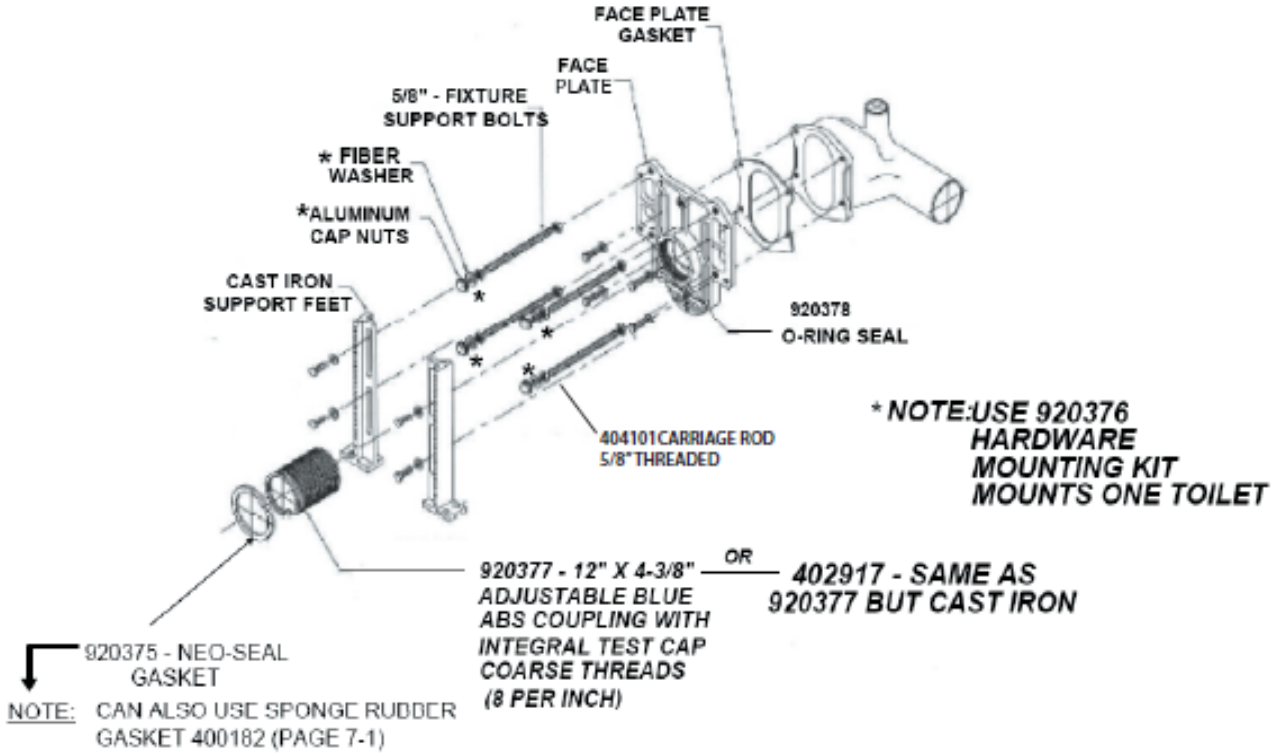

TYPICAL SMITH ADJUSTABLE FIXTURE WITH WASTE FITTING -LINEBACKER

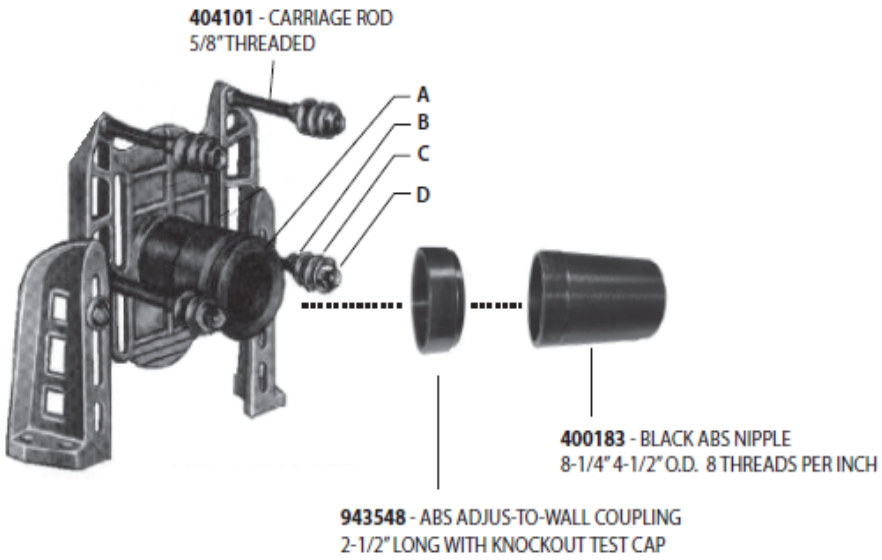

100237 - 14 PIECE HARDWARE MOUNTING KIT WITH SEALANT KIT CONTAINS:

A (1) SPONGE RUBBER OUTLET GASKET - **400182**

B (4) FIXTURE BEARING NUTS & WASHERS

C (4) FIXTURE WASHERS-FIBRE

D (4) FIXTURE CAP NUTS

TOILET SEAT HINGE STABILIZERS WHITE PLASTIC

*NO MORE LOOSE WOBBLY TOILET SEATS
*EASY TO INSTALL - SIMPLY PUSH INTO BOLT HOLE BEFORE HINGE IS IN PLACE
*WORKS WITH ALL SEATS AND HINGE STYLES

100451

PLASTIC HINGE BOLTS

7/16" x 2-5/8" WITH 5/8" OD HEAD-SPERZEL

100876 - All Sold By Pairs

CARRIER NUT EXTENTION KIT

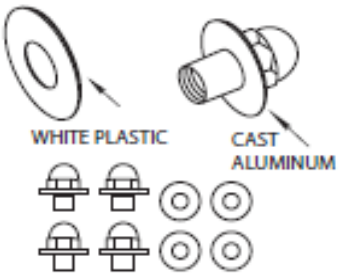

400897

WHITE RUBBER FRICTION WASHER

808127

14 IN 1 TOILET SEAT HINGE NUT WRENCH

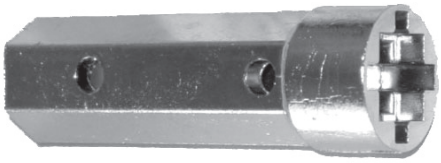

200170

ZURN CARRIER NUT KIT

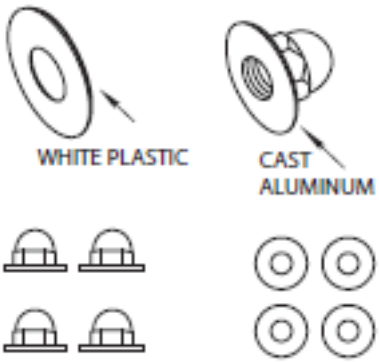

920376

OPEN FRONT SEAT WITHOUT LID FOR REGULAR BOWL

100172 - BEMIS CHECK HINGE WITH STAINLESS STEEL POST & PIN HEAVY GRADE
100171 - BEMIS BABY BOWL. CHECK HINGE WITH STAINLESS STEEL POST & PIN

OPEN FRONT SEAT WITHOUT LID FOR ELONGATED BOWL

100148 - SPREZEL WITH STAINLESS STEEL SUSTAINING CHECK HINGE
100170 - BEMIS CHECK HINGE WITH STAINLESS STEEL POST & PIN. HEAVY GRADE
100151 - BEMIS- CHECK HINGE WITH STAINLESS STEEL POST & PIN. HEAVY GRADE. BLACK
100154 - BEMIS WITH STAINLESS STEEL SELF SUSTAINING CHECK HINGE. FIRE RESISTANT

CLOSED FRONT SEAT WITH LID FOR REGULAR BOWL

100136 - BEMIS SEAT MEDIUM GRADE
100141 - BEMIS MEDIUM GRADE
105551 - GENERIC WOODEN
105548 - GENERIC PLASTIC

7

CLOSED FRONT SEAT WITH LID FOR ELONGATED BOWL

000843- BEMIS, WOODEN HEAVY GRADE
105552 - GENERIC WOODEN
105549 - GENERIC PLASTIC

OPEN FRONT SEAT WITH LID FOR REGULAR BOWL

100142 - BEMIS HEAVY GRADE, DURA-GUARD

OPEN FRONT ADA SEAT WITH CHECK HINGES AND PLATED METAL POST & PIN (ELONGATED)

000843- BEMIS, WOODEN HEAVY GRADE
105552 - GENERIC WOODEN
105549 - GENERIC PLASTIC

100863 - FLAPPER (BLUE) WITH CHAIN

805599 - KOHLER FLAPPER (RED)

105542 - KORKY FLAPPER RED, BOXED

100165 - KORKY FLAPPER (RED)
100160 - KORKY FLAPPER (BLACK)

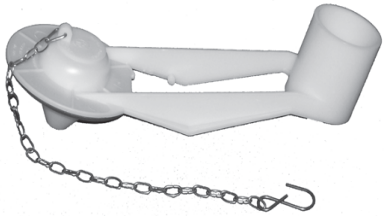

100546 - COAST/BUCKET FLAPPER UNIT

103559 - ELJER FLAPPER

100347 - BRIGGS FLAPPER WITH FLOAT

100887 - WATER SAVER FLAPPER WITH INSERT

100404 - KOHLER FLAPPER

409989 - TOTO FLAPPER

100341 - FRUGAL FLAPPER

401692 - AMERICAN STANDARD FLAPPER

100357 - TANK FLAPPER

103554 - MAX FLUSH FLAPPER LOW PRO, FITS MOST FLUSH VALVES

04520 - FLAPPER ASSEMBLY WITH FLOAT. AMERICAN STANDARD

100105 - SEALMASTER FLAPPER LIKE KORKY

100100 - DELTA WHITE FLAPPER WITH STRAP

409985 - EXTRA LARGE FLAPPER FOR TOTO G-MAX (O.E.M.)
409981 - EXTRA LARGE FLAPPER FOR TOTO G-MAX

100863 - FLAPPER (BLUE) WITH CHAIN

100040 - KOHLER FLAPPER

804049 - KOHLER FLAPPER

100090 - KOHLER FLAPPER WITH CHAIN

100054 - KORKY FLAPPER

500015 - 501 FLAPPER (RED)

100438 - LAVELLE FLAPPER BLISTER PACK

100615 - CRANE FLAPPER

100281 - FLAPPER FOR KOHLER

100169 - KOHLER FLAPPER KIT

100223 - KOHLER FLAPPER KIT

100424 - YELLOW FLAPPER

100598 - ELJER FLAPPER

804358 - KOHLER FLAPPER

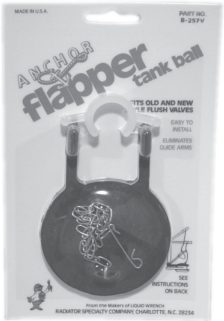

100006 - SEALMASTER FLAPPER/RAD

FLUSHER FIXER KIT

100190

FOR AMERICAN STANDARD 4-1/4" OFFSET ARM (BRASS) C.P. HANDLE WITH PLASTIC SPUD AND NUT

100871 - 45° ANGLE ARM
100866 - 30° ANGLE ARM

AMERICAN STANDARD PUSH-BUTTON FLUSH ARM ASSEMBLY

100046

FOR AMERICAN STANDARD/ ELJER WITH PLASTIC SPUD AND NUT

100238 - WHITE HANDLE 4" LONG
100835 - C.P. HANDLE 4" LONG
808154 - C.P. HANDLE 6" LONG

FOR AMERICAN STANDARD

100884 - PVC SPUD AND NUT WITH C.P. HANDLE. 6" BRASS ARM

ELJER SIDE MOUNT FLUSH ARM

100560 - 9" LONG WITH PLASTIC SPUD & NUT. C.P. HANDLE

ELJER CHROME HANDLE

100870 - 4-1/2" CLEAR PLASTIC ARM. SPUD & SNAP CLIP. CHAIN INCLUDED

SIDE MOUNT FLUSH ARM PUSH BUTTON TYPE FOR AMS, BRIGGS, CRANE, ELJER, KOHLER, UNIVERSAL RUNDLE

404390 - 8" BRASS ARM WITH C.P. PUSH BUTTON

FRONT MOUNT FLUSH ARM PUSH BUTTON TYPE FOR AMS, BRIGGS, CRANE, ELJER, KOHLER, UNIVERSAL RUNDLE

404385 - 8" BRASS ARM WITH C.P. PUSH BUTTON

ULTRA FIT TANK LEVER WITH PVC SHAPEABLE ARM

SHAPEABLE ARM BENDS TO FIT THE NEEDED ARM ANGLE ARMS CAN BE CUT TO 4", 6" OR 8" LENGTHS

100965 - ULTRAFIT TANK LEVER

MANSFIELD, WITH CHROME PLATED HANDLES 9" ARM

102420 - PVC FLUSH ARM OEM MANSFIELD

MANSFIELD, WITH CHROME PLATED HANDLES 10 1/4" ARM

100860 - METAL FLUSH ARM MANSFIELD

MANSFIELD, WITH CHROME PLATED HANDLES 7 1/2" ARM

100853 - PVC FLUSH ARM

804100 - FOR AMERICAN STANDARD, CRANE, ELJER, FLUIDMASTER & GERBER. ALL PLASTIC WITH 8" ARM AND CHROME PLATED HANDLE

100129 - SAME AS ABOVE WITH WHITE HANDLE. 4", 6" 8" COMBINATION TYPE, CAN BE CUT TO FIT

NEO 28˚ 4", 6" 8" COMBO WITH PLASTIC ARM FITS CERTAIN AMERICAN STANDARD, BRIGGS, ELJER, KOHLER & PEERLESS MODELS ALL PLASTIC. CUT ARM TO DESIRED LENGTH.

103217 - ARM WITH CHROME HANDLE
106223 - ARM WITH WHITE HANDLE

100726 - FOR RECESSED TOILETS 10" FLAT BRASS OFFSET ARM WITH 5 HOLES AND CHROME HANDLE WITH METAL SPUD

100555 - FOR KOHLER SIDE MOUNT 8-1/2" OFFSET PLASTIC ARM. WITH CHROME METAL HANDLE.

100555

FOR AMERICAN STANDARD. ALL PVC WITH 6-1/4" ARM

100868 - WHITE HANDLE
100869 - CHROME PLATED HANDLE

103100 - FOR KOHLER. ALL BRASS 8-1/2" HEAVY DUTY FLUSH ARM

FOR AMERICAN STANDARD ALL PLASTIC. 6-1/2" ARM

100128 - CHROME PLATED HANDLE
100124 - WHITE HANLE
800231 - POLISHED BRASS HANDLE

100872 - FOR AMERICAN STANDARD. ALL PLASTIC WITH CHROME PLATED HANDLE

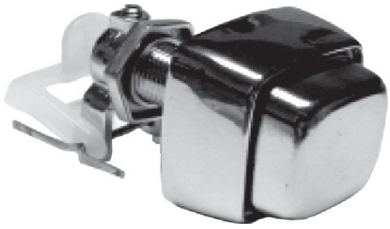

100229 - CASE/BRIGGS HANDLE UNIT - SIDE MOUNT

100867 - 6" FOR AMERICAN STANDARD CHROME PLATED HANDLE WITH BRASS ARM.

100610 - FOR BRIGGS (OEM). ALL PLASTIC 8" ARM WITH 5 HOLES AND 3 SLOTS. HAS C.P. HANDLE

100121 - FOR BRIGGS/CASE. CHROME PLATED HANDLE, WITH BRASS ARM AND PVC SPUD & NUT

KOHLER FLUSH ARM ASSEMBLY WITH BRASS ARM

100885 - FLUSH ARM ASSEMBLY
801431 - SET SCREW FOR ARM
801465 - PVC YOKE ASSEMBLY
100327 - METAL ARM ONLY
802016 - PVC ARM ONLY

FIT ALL FLUSH ARM REPLACES MOST FRONT MOUNT ARMS

100126 - WITH PLASTIC SPUD & NUT
100127 - WITH METAL SPUD & NUT

TOTO FLUSH ARM SIDE MOUNT FOR G-MAX(DRAKE)

104424

BRIGGS FLUSH ARM ASSEMBLY

100612

KOHLER FLUSH ARM

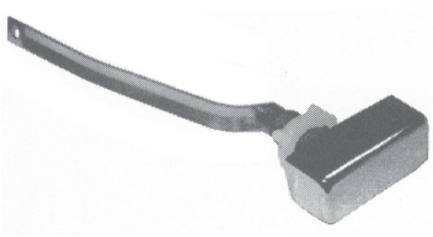

100218 - WITH 5-1/2" ARM

UNIVERSAL RUNDLE FLUSH ARM

804649

REPLACEMENT LIFT CHAIN FOR AMERICAN STANDARD

100200 - COMPLETE BALL CHAIN ASSEMBLY
807341 - CLIP ONLY

AMERICAN STANDARD FLUSH ARM ASSEMBLY FOR PRESSURE ASSIST UNITS

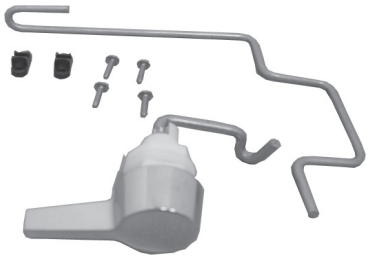

100999

7

TOILET FLUSH UNIT FITS ELJER TOUCH FLUSH UNIT

100101 - COMPLETE ASSEMBLY

MANSIFELD 210 WATER SAVER FLUSH VALVE

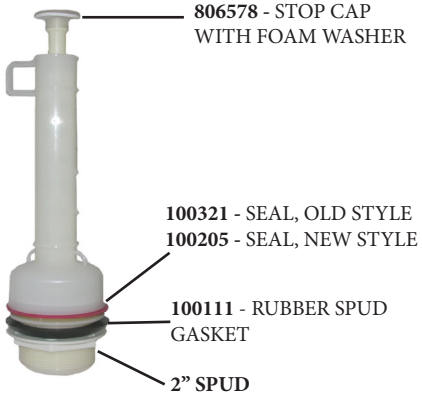

100220

PLASTIC FLUSH VALVE

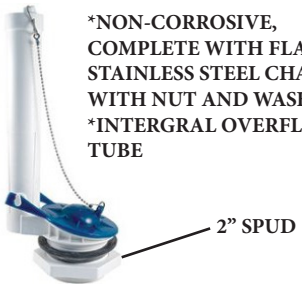

100112 - RUBBER GASKET, 5/8" THICK x 3/8" O.D.
100111 - RUBBER GASKET, 3/8" THICK x 2-15/16" O.D.

100110 - COAST
100179 - FLUID MASTER

FILL PRO

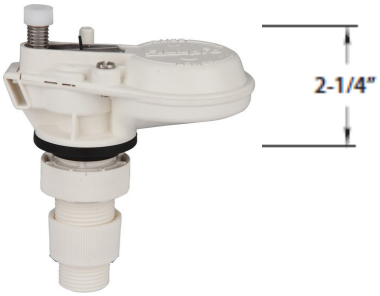

401350 - NO VACUUM BREAKER
100186 - WITH VACUUM BREAKER

HUNTER FLUSH VALVE WITH RED FLAPPER

100189

KORKY ADJUSTABLE FLUSH VALVE AND FLAPPER

410770

7

COAST FOUNDRY
1B1 ANTI-SIPHON BALLCOCK (PLASTIC) WITH BRASS ROD AND REFILL TUBE. WITH 3 SCREW CAP.

100891 - TOP CAP ASSEMBLY W/ MALE SIDE OUTLET
100002 - 10”
808001 - 12”
100211 - REPAIR KIT
807263 - PVC SHANK NUT 7/8”

FLUID MASTER
400-A ANTI-SIPHON FILL VALVE (25/CASE)

100175

HOOV-R-LINE BALLCOCKS

100240 - TOP CAP - SIDE OUTLET
100245 - TOP CAP - TOP OUTLET
100250 - TOP CAP - NO OUTLET

100176 - 10” ANTI-SIPHON
100178 - 8-1/2” REGULAR
100255 - REPAIR KIT

KORKY QUIET FILL VALVE
(REPLACES OLD STYLE HUNTER) (25/CASE)

ADJUSTABLE 8”- 13-1/2”
FOR WATERSAVING

100177

MANSFIELD 08 WITH BLUE TOP

100859 - WHITE PVC PISTON WITH 7/8” O.D. TOP

100215 - ANTI-SIPHON VALVE COMPLETE
100210 - REPAIR KIT W/ TWO BLACK 2-1/8” O.D. DIAPHRAGMS

FLOAT BALL

100275 - PLASTIC
407777 - COPPER
100852 - MANSFIELD BLUE PVC (NOT PICTURED)

FLOAT RODS

100297 - 8”
100298 - 10”
100299 - 12”

FLUID MASTER BALLOCK REPAIR SEAL

100180 - GENERIC
100182 - OEM/BULK
100181 - OEM CARDED

TANK TO BOWL GASKET
GERBER TYPE FOR OLDER CLOSETS
1-3/16” THICK

100152

TANK TO BOWL GASKET
GERBER TYPE RECESSED
3-3/4” X 2-3/16 X 1-3/16”

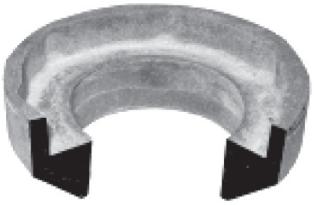

108600

7

FOR AMERICAN STANDARD
CADET - 1/16" THICK

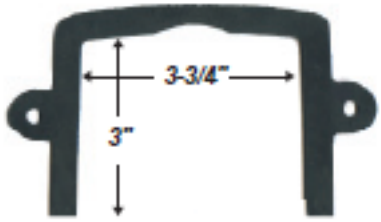

404460

FOR AMERICAN STANDARD
SPONGE RUBBER
3-1/2" TOP O.D., 3" TOP I.D.
2-1/8 BOTTOM I.D., 1-1/8
HEIGHT

100047

FOR CRANE/SLOAN
FOR PRESSURE ASSIST TOILET
SEMI-HARD RUBBER
4-1/2" TOP O.D., 4" TOP I.D.
2-1/4" BOTTOM I.D., 7/8" HEIGHT

100285

FOR CRANE
SPONGE RUBBER
3-1/8" TOP O.D., 2" TOP I.D.
2" BOTTOM I.D., 1" HEIGHT

100307

FOR ELJER
SEMI-HARD RUBBER

404455

FOR ELJER
PRESSURE ASSIST COMMODES
4-1/2" TOP O.D., 4" TOP I.D.
2-3/16" BOTTOM I.D., 1-1/4"
HEIGHT

100403

FOR ELJER
HARD RUBBER
3-1/8" TOP O.D., 2-1/4" TOP I.D.
2-1/4" BOTTOM I.D., 5/16"
HEIGHT

100306

FOR GERBER
SPONGE RUBBER
3-1/4" TOP O.D., 2-1/8" TOP I.D.
2-1/8" BOTTOM I.D., 1-3/16"
HEIGHT

100309

FOR KOHLER
HARD RUBBER
4-1/8" TOP O.D., 2-3/8" TOP I.D.
3-3/16" BOTTOM I.D., 11/16"
HEIGHT

100305

FOR MANSFIELD
MEDIUM HARD RUBBER
3-5/8" TOP O.D., 3" TOP I.D.
2-7/8" BOTTOM I.D., 3/4"
HEIGHT

100026

FOR TOTO G-MAX
SPONGE RUBBER
4-1/4" TOP O.D., 3-3/4" TOP I.D.
2-7/8" BOTTOM I.D., 1-5/16"
HEIGHT

409986

"UNIVERSAL"
SPONGE RUBBER
3-3/8" TOP O.D., 2-1/4" TOP I.D.
2-1/4" BOTTOM I.D., 3/4"
HEIGHT

100227

SNAP ON SEAT DISC

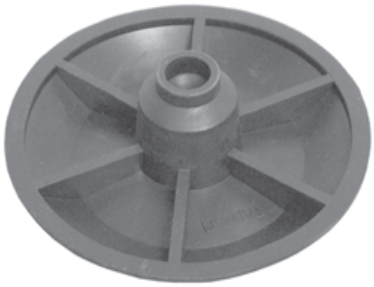

100150

SCREW TYPE SEAT DISC

100001

SCREW FOR SEAT DISC

800024

AMERICAN STANDARD
O.S. ACTUATOR UNIT HIGH

941002

AMERICAN STANDARD
FLUSH VALVE
UNIT-ACTUATOR

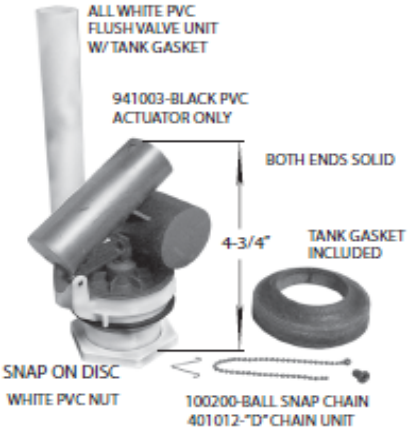

800193

AMERICAN STANDARD
FLUSH VALVE

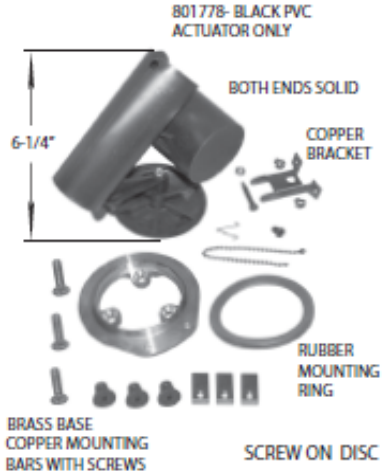

802090

AMERICAN STANDARD
ACTUATOR UNIT

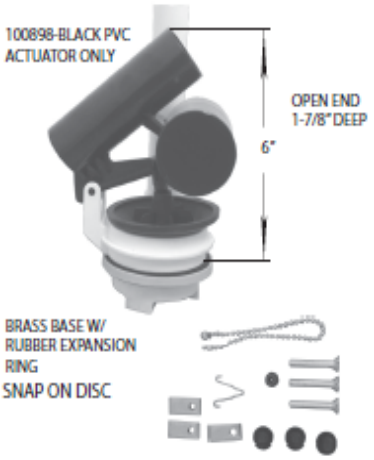

801777

AMERICAN STANDARD
ACTUATOR UNIT

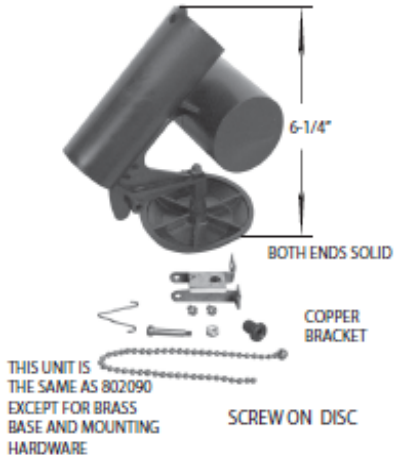

801778

AMERICAN STANDARD
O.S. ACTUATOR (LOW STYLE)

941003

RETROFIT WALL MOUNTED TOILET SUPPORT

HANDLES OVER 400lbs LOAD.
INSTALL TIME IS LESS THAN 15 MINUTES
CAN SUPPORT +1000lbs
PROVIDES THE ABILITY TO SANITIZE THE FLOOR UNDERNEATH IT
FITS ALL WALL MOUNTED TOILETS OF ALL MAJOR PLUMBING FIXTURE COMPANIES
A MUST HAVE FOR ANYWHERE ADA STANDARDS ARE SET

206302

TOILET JACK

*INCREASE WEIGHT CAPACITY FROM 350 LBS TO 1000 LBS
*MAINTAINS THE CLEANING ABILITY OF A WALL MOUNTED FIXTURE
*STAINLESS STEEL LEG
* INSTALLS IN MINUTES

206300 - HEIGHT ADJUSTMENT FROM 6.5” TO 8.5”. FITS MOST MANUFACTURERS WALL-MOUNTED TOILETS WHEN MOUNTED AT THE STANDARD HEIGHT

206301- HEIGHT ADJUSTMENT FROM 8.5” TO 12.5”. FITS MOST MAJOR MANUFACTURERS WALL-MOUNTED TOILETS WHEN MOUNTED AT HANDICAP HEIGHT

AFWALL

ELONGATED, 1.6 GPF, SIPHON FLUSH ACTION, WALL-HUNG, WALL OUTLET, REQUIRES CHAIR CARRIER FLUSH VALVE AND SEAT (NOT INCLUDED)

100800 - 1-1/2" SPUD

INSTANTO

ELONGATED, 3.5 GPF, BLOW-OUT FLUSH ACTION, WALL-HUNG, WALL OUTLET, REQUIRES CHAIR CARRIER FLUSH VALVE AND SEAT (NOT INCLUDED)

008014 - 1-1/2" SPUD

MADERA

ELONGATED, 1.6 GPF, SIPHON FLUSHING ACTION, 10" ROUGH, 1-1/2" TOP SPUD REQUIRES FLUSH VALVE AND SEAT (NOT INCLUDED)

001032 - 14-1/8" RIM HEIGHT
002556 - 14-1/8" SLOTTED RIM FOR BEDPAD

MADERA

ELONGATED, 1.6 GPF, SIPHON FLUSH ACTION, 10" ROUGH, 1-1/2" TOP SPUD REQUIRES FLUSH VALVE AND SEAT (NOT INCLUDED)

104382 - 17" RIM HEIGHT

NEOLO

ELONGATED, 1.6 GPF, SIPHON FLUSH ACTION, REQUIRES CHAIR CARRIER FLUSH VALVE AND SEAT (NOT INCLUDED)

101225 - 15" RIM HEIGHT

WASHBROOK 0.7

0.7 - 1.0 GPF, WASHOUT FLUSH ACTION, WALL HUNG 3/4" INLET, 2" OUTLET, INCLUDES WALL HANGERS, FLUSH VALVE BY OTHERS

104380

TRIMBROOK 0.5

0.85 - 1.0 GPF, SIPHON JET FLUSH ACTION, WALL HUNG 3/4" INLET, TOP SPUD, 2" OUTLET, INCLUDES WALL HANGERS

103665

ALLBROOK 0.7

940831 - HANGER ONLY

0.7 - 1.0 GPF, SIPHON JET FLUSH ACTION, WALL HUNG 3/4" INLET, 2" OUTLET, INCLUDES WALL HANGERS, TOP SPUD, FLUSH VALVE BY OTHERS

002454

STALLBROOK 0.7

0.7 - 1.0 GPF, WASHOUT FLUSH ACTION, SLOPING FRONT STALL, 3/4" TOP SPUD, 3-1/2" OUTLET
*NOTE: ELECTRONIC FLUSH VALVE REQUIRED TO MEET ADA REQUIREMENT

104381

JETBROOK 1.0

802485 - GASKET ONLY

406864
URINAL OUTLET KIT ONLY FOR JETBROOK

000984 - HANGER ONLY

1.0 GPF, BLOWOUT FLUSH ACTION, 2" INLET, INCLUDES WALL HANGERS, FLUSH VALVE BY OTHERS, 1-1/4" TOP SPUD

002453

LYNBROOK 0.85

0.85 - 1.0 GPF, BLOWOUT FLUSH ACTION, WALL HUNG, 1-1/4" INLET, 2" OUTLET, INCLUDES WALL HANGERS, FLUSH VALVE BY OTHERS

103666 - TOP SPUD
103667 - BACK SPUD

URINAL OUTLET CONNECTION KIT

408027 - 2", FITS WASHBROOK, LYNBROOK, TRIMBROOK, AND ALLBROOK URINALS

101016 - URINAL STRAINER

7

REPLACEMENT COMMODE TANK ONLY , WHITE **101000**	ELONGATED SIPHON JET 2 PIECE TIOLET 12” ROUGH **101001**	ROUND SIPHON JET 2 PIECE TOILET 12” ROUGH **101002**
ADA, ELONGATED SIPHON JET 2 PIECE TOILET 12” ROUGH **101003**	ADA, ELONGATED PRESSURE ASSIST, 2 PIECE TOILET 12” ROUGH **101005**	ELONGATED PRESSURE ASSIST, 2 PIECE TOILET 12” ROUGH **101006**
ELONGATED COMMODE TANK AND BOWL COMBO, ADA HEIGHT FOR 10” ROUGH **101011**	WALL HUNG COMMODE TOP SPUD **101013**	HIGH PERFORMANCE ADA 2 PIECE TOILET 12” ROUGH **101014**

ELONGATED, STANDARD HEIGHT COMMODE. FOR USE WITH FLUSH VALVE 10” ROUGH **101015**	ADA ELONGATED COMMODE FOR USE WITH FLUSH VALVE 10” ROUGH **101016**	BABY BOWL FOR USE WITH FLUSH VALVE 10” ROUGH **101018**
BABY BOWL AND TANK ASSEMBLY, 10” ROUGH **101019**	STANDARD HEIGHT, COMMERCIAL COMMODE, REAR DISCHARGE **101021**	ELONGATED SIPHON JET 2 PIECE TOILET, 10” ROUGH **101010**
SIPHON JET COMMODE 2 PIECE ROUND BOWL 10” ROUGH **101034**	COMMERCIAL COMMODE ADA HEIGHT, REAR DISCHARGE **101022**	RETRO FIT WATER SAVING URINAL, 1/8 PINT PER FLUSH **101036**

WASHOUT URINAL WITH BOTTOM OUTLET **101023**	LARGE WATERLESS URINAL **101026**	SMALL WATERLESS URINAL **101025**
1.0 GPF WASHOUT URINAL **101007**	SIPHON JET URINAL **101020**	WALL HUNG URINAL 1/8 PINT PER FLUSH WATER SAVING **101037**
19” x 17” CAST IRON SINK 8” CENTERS, WALL HUNG **101031**	19” x 17” CAST IRON SINK 4” CENTERS, WALL HUNG **101032**	WALL HUNG LAVATORY CAST IRON, WHITE ENAMELED SINGLE HOLE, COMMERCIAL **101030**

20” x 18“WALL HUNG, CAST IRON SINK. 4” ON CENTER HOLES **101017**	20” x 18“ WALL HUNG LAVATORY SINK, 8” CENTERS **101035**	20” x 18” SINGLE HOLE SINK **101028**
20” x 18” LAVATORY SINK WITH 4” CENTERS **101004**	19” ROUND SELF RIMMING CAST IRON LAVATORY SINK 20” x 17” **101009**	FLOOR MOUNTED, SIPHON JET SERVICE SINK WITH STAINLESS STEEL RIM GUARD, 27” x 20-1/2” **101008**
20” x 17” SELF RIMMING CAST IRON SINK, 4” CENTERS **101024**	19” x 16” UNDERMOUNT LAVATORY SINK WITH 4” CENTERS **101012**	20” x 17” CAST IRON SINK 8” CENTERS **101029**

KOHLER URINAL BRACKET STAMPED STEEL

1-3/4”

3-3/8”

808852

STAMPED COATED STEEL LAVATORY HANGER

5-1/2”

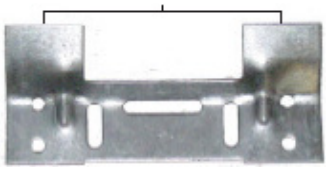

940818

AMERICAN STANDARD URINAL BRACKET (STAMPED COATED STEEL)

1-1/2”

3-3/8”

940831

STAMPED COATED STEEL LAVATORY HANGER

8”

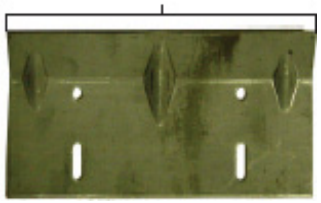

940705

STAMPED COATED STEEL LAVATORY HANGER

5”

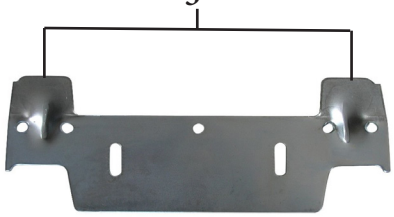

949021

CAST IRON ADJUSTABLE LAVATORY HANGER

Adjustable from 10-1/16” to 15-1/4”

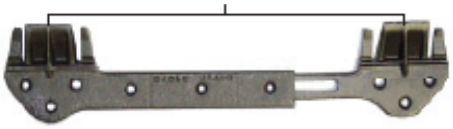

940700

STAMPED COATED STEEL LAVATORY HANGER

10”

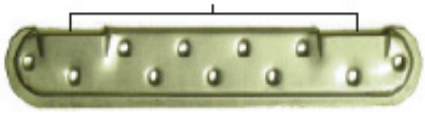

940819

UNDERMOUNT SINK CLAMP (4 PER BAG)

943659

SINK CLAMP (4 PER BAG)

943655

SINK CLAMP (4 PER BAG)

943657

SINK CLAMP (4 PER BAG)

943657

SINK CLAMP (4 PER BAG)

943657

SINK CLAMP 18/BAG WITH NAILS

943657

SINK CLAMP (4 PER BAG)

943657

SECTION EIGHT
SUPPLY AND WASTE

STAINLESS STEEL FLAT BOTTOM STRAINER BASKET. MOST COMMON **400085**	STAINLESS STEEL "POST" TYPE STRAINER BASKET **400935**	REPLACEMENT BASKET STRAINER WITH SPRING CLIP **401271**
CRUMB CUP (1-1/2" DIAMETER) **401288** - NO POST **401286** - WITH POST	DRAIN STRAINERS (3 PRONG) **401285** - 1-5/8" (LIGHT WEIGHT) **401205** - 1-7/8" (LIGHT WEIGHT) **407069** - AMERICAN STANDARD (HEAVY DUTY)	SMALL BAR SINK DRAIN STRAINER WITH 4 RUBBER FEET **401325**
FIT ALL STOPPER, LESS CHAIN WHITE RUBBER **400160** - 1" TO 1-3/8" (FOR LAVATORY) **400165** - 1-1/2" TO 2" (FOR BATHTUB)		

8

BEAD CHAIN BY THE FOOT (MIN 25 FT.)
ACTUAL SIZE SHOWN

920346 - #6, 1/8" BEAD CHAIN

920345 - #10, 3/16" BEAD CHAIN

BEAD CHAIN EYELET COUPLING

920350 - NO. 6A EYELET COUPLING
920349 - NO. 10A EYELET COUPLING

BEAD CHAIN SECTIONS W/COUPLINGS ON EACH END

401032-3/4" RING
408024-1" RING

920352 - 11" LAV CHAIN
920353 - 15" TUB CHAIN

BEAD CHAIN COUPLING

920347 - NO. 6B BEAD CHAIN COUPLING
920348 - NO. 10B BEAD CHAIN COUPLING

UNIVERSAL STOPPER FOR SINKS & TUBS (WHITE) RUBBER. SUCTION TYPE. 5" DIAMETER.

400551

DISPOSAL SPLASH GUARD

100020 - "UNIVERSAL" (PICTURED)
402555 - FOR IN-SINK-ERATOR (NOT PICTURED)
402435 - FOR WHIRLAWAY (NOT PICTURED)
942500 - GE/OEM, ALSO FOR RCA & HOTPOINT

DISPOSAL CONNECTOR, RUBBER W/2 CLAMPS

400206

DISPOSAL CONNECTOR, RUBBER W/4 CLAMPS

400205

8

BASKET STRAINER ASSEMBLY ALL METAL MEDIUM GRADE

400090
400935 - STRAINER ONLY

BASKET STRAINER ASSEMBLY HEAVY DUTY WITH CAST BRASS NUTS

400190
400195 - STRAINER ONLY

B&K BASKET STRAINER ASSEMBLY DEEP CUP STYLE

401305
400935 - STRAINER ONLY

BASKET STRAINER ASSEMBLY "QUICK FIT" DEEP CUT TYPE

401230

STERLING BASKET ASSEMBLY WITH ADJUSTABLE STOPPER AND PVC YOKE

806045
406862 - STRAINER ONLY

BIG BOY HEAVY DUTY DEEP BASKET STRAINER ASSEMBLY

401275
401271 - STRAINER ONLY

STAINLESS STRAINER ASSEMBLY, GRID TYPE, FLAT TOP FOR KITCHEN SINK

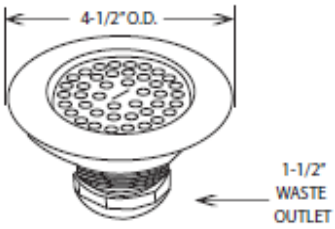

400091

CAST BRASS HEAVY-DUTY FLAT TOP, STRAINER UNIT WITH STAINLESS TOP & SNAP IN GRID STRAINER. THIS UNIT CAN REPLACE A STANDARD BASKET STRAINER

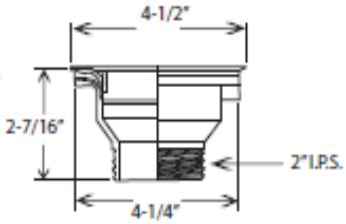

NOTE: SNAP IN STRAINER FOR THIS UNIT IS A 3-1/8" FOUR PRONG **(ACS # 401040)**

407938

8

LAUNDRY TUB STRAINER UNIT 1-1/4" x 1-1/2" WITH NUT & WASHERS

804217

DRAIN STRAINER FOR **804217** DRAIN STRAINER WITH 4 RUBBER FEET

401325

FLAT STRAINER UNIT 1-1/2" WITH ALL BRASS NUTS

406980

1-1/2" C.P. DRAIN UNIT WITH STOPPER & CROSS DRAIN RODS 1-1/2" SHANK

408240

1-1/2" BRASS DRAIN UNIT WITH TWO NUTS & WASHER

408239

408856 - 1" PVC BAR DRAIN WITH 1-3/8" GRAY SHANK
406603 - COMPLETE UNIT WITH GASKET AND NUT

1" BRASS BAR DRAIN WITH DIE-CAST NUT & WASHER (1-15/16" FLANGE O.D.)

406905

1" BRASS DRAIN UNIT WITH TAILPIECE

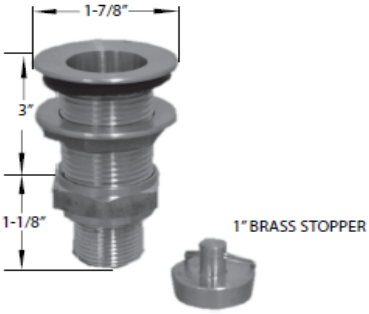

408237

1-1/2" BRASS DRAIN WITH 3-3/4" SHANK

406908

1" BRASS BAR DRAIN WITH WASHER & BRASS NUT

406906

1-1/2" BRASS DRAIN UNIT WITH NUTS & WASHER

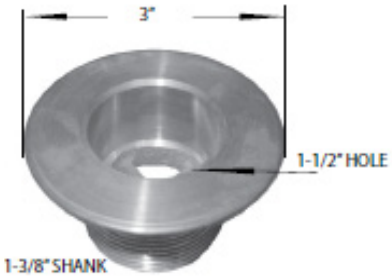

406907

1" BRASS BAR DRAIN UNIT WITH 4-3/4" SHANK

406878

RUBBER WASHER 1-3/4" O.D. x 1-1/4" I.D. FOR 1" NUT

401050

LOCK NUT

406910 - 1" BRASS
406898 - 1-1/2" PLATED
406909 - 1-1/2" BRASS

8

DROP IN FLOOR DRAIN STRAINERS
(FITS MOST DEEP, WHITE FLOOR DRAINS KEEPS FOOD, MOP STRINGS, ETC FROM CLOGGING DRAINS)

REMOVABLE FOR CLEANING
WHITE PLASTIC
8-1/2" x 8-1/2" x 2-1/2" HIGH

406422 - 1/8" DIAMETER HOLES
406423 - 3/16" DIAMETER HOLES

FLANGED FLOOR DRAIN STRAINER
(RESTS ON TOP OF FLOOR DRAIN)

WHITE PLASTIC
11-3/4" x11-3/4" TOP FLANGE
8-1/2" BASKET WIDTH
4" HIGH

406424

FLOOR DRAIN STRAINER
(FITS MOST SMALL FLOOR DRAINS)

CAN BE USED WITH OR WITHOUT TOP STRAINER
3-3/4" TOP DIAMETER
3" DIAMETER UNDER TOP RIM

STOPS PROBLEMS IN THE LESS OBVIOUS DRAINS

406425

FLOOR DRAIN STRAINERS

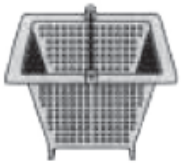

406426-
6-3/4" x 6-3/4"
4-1/2" DEEP

407908-
6-1/2" DIAMETER
4" DEEP

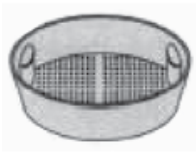

406427-
9-1/2" DIAMETER
2-1/2" DEEP

TOP COVERS FOR FLOOR DRAINS
COVERS ARE 9-1/4" SQUARE

406428
FULL COVER

406430
1/2 COVER

406429
1/4 COVER

CAST IRON WITH WHITE PORCELAIN COATING

TOP STRAINERS FOR FLOOR DRAINS

Item No.	Diameter	Thickness	Material
406431	4"	1"	Brass
406432	4-7/8"	3/16"	Brass
406433	5-1/2"	3/16"	Brass
406434	6-3/4"	3/8"	Heavy PVC
406435	7-1/2"	3/16"	Brass
406436	8"	1/4"	Cast Iron
406437	8-1/2"	5/16"	Cast Iron

NOTE: CAST IRON STRAINERS ARE PAINTED AND SCREW HOLES MUST BE DRILLED AND ARE ALSO AVAILABLE IN 1/4" INCREMENTS FROM 6" TO 10" DIAMETER. MANY OTHER TOP STRAINERS ARE AVAILABLE.

GARBAGE DISPOSER STRAINERS

KEEPS SILVERWARE, PLATES, CUPS, ETC. OUT OF DISPOSER WHILE LIQUID FLOWS THROUGH. SIMPLY DUMP SCRAP IN DISPOSER WHEN NECESSARY

406438 - FITS 18" DIAMETER CONE
406439 - FITS 12" DIAMETER CONE
406440 - FITS 15" DIAMETER CONE

STRAINER LOCKS

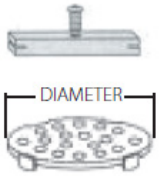

407909 - FITS 3-7/16" DIAMETER
407910 - FITS 3-1/8" DIAMETER

*PREVENT LOSS OF SNAP-IN STRAINERS. ALL STAINLESS STEEL

*END EXPENSIVE STRAINER REPLACEMENT AND DRAIN CLEANING

*INSTALLS IN SECONDS. SIMPLY DROP THE BAR INTO THE SLOT IN THE TOP RING AND TWIST. SNAP IN STRAINER AND INSERT SCREW

*SUPPLIED W/ STANDARD & VANDAL-PROOF SCREWS

DIECAST SINK STRAINER LOCK NUT (3-3/8" DIAMETER)

400555

DRAIN REPAIR KIT (REPAIRS EITHER LARGE OR SMALL LEVER/ TWIST DRAINS)

406413

DRAIN STRAINERS

406157 - STRAINER FITS 3/4" OPENING, 1" DIAMETER

406158 - STRAINER FITS 1" OPENING, 1-3/8 x 1-7/8

TOP STRAINERS

Part No.	Fits Openings	Top Diameter
406410	2"	2-3/8"
406411	3"	3-1/2"
406412	4"	4-1/2"

GASKET FOR SINK STRAINER (3-3/8" DIAMETER)

407933 - FIBER
407932 - RUBBER
402620 - GALVANIZED

DISPOSER STRAINERS

406414 - 6-1/4" DIAMETER
406415 - 3-1/2" DIAMETER

SPLASH GUARD TO FIT in-Sink-Erator "ISE" COMMERCIAL DISPOSER

7-1/2" OUTSIDE DIAMETER
6" INSIDE DIAMETER
NOTE: SPLASH GUARDS TO FIT OTHER MANUFACTURES ARE AVAILABLE

000048

DROP-IN SINK STRAINERS (IDEAL FOR DISH TABLE AND VEGETABLE SINKS SPEEDS CLEAN-UP TIME)

406417 - FITS BOWL SIZE 17" x 17"
406418 - FITS BOWL SIZE 18" x 18"

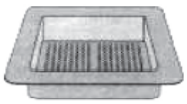

406419 - FITS BOWL SIZE 20" x 20"
406420 - FITS BOWL SIZE 24" x 24"

BAR SINK STRAINER (PREVENTS CLOGGED DRAINS SPEEDS CLEAN-UP TIME)

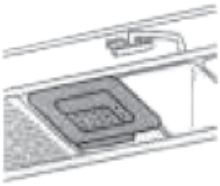

RESTS ACROSS SINK OPENING TO CATCH WASTE
WHILE LIQUID FLOWS FREELY INTO SINK
11-3/4" TOP FLANGE - 4" DEEP

406421

JOSAM REPLACEMENT GRATES (3 SCREW, BRASS STRAINER)

404626 - 4-5/8"
409566 - 5-1/4"
409601 - 6-7/16"
402341 - 7-1/8"

8

LOCK & STOP DRAIN LOCK KIT

941470 - 2”
941475 - 3”
941476 - 4”

MOLDED PLASTIC DRAIN NET

941479 - 2”
941480 - 3”
941485 - 4”

DISPOSABLE DRAIN FILTERS

DRAIN-NET BOX OF 50 DISPOSABLE DRAIN FILTERS

941489 - 2”
941490 - 3”
941491 - 4”

LOCK & STOP DRAIN TOOL

941477

MESH STRAINER (STAINLESS STEEL)

406615 - 1-1/4”
406616 - 1-1/2”
406617 - 3”

8

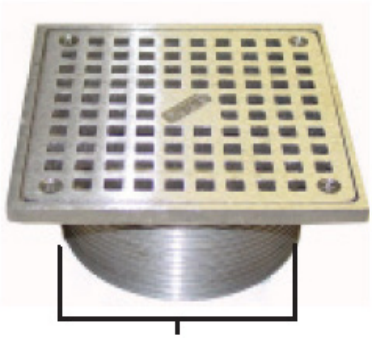 3-11/16” I.D. STRAINER GRID O.D. IS 4-5/8” BODY UNIT O.D. IS 4-15/16” **941160**-GRID ONLY	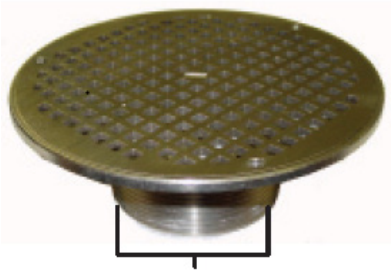 3-11/16 I.D. BODY UNIT O.D. IS 8” STRAINER GRID O.D. IS 7-3/4” **941153**-GRID ONLY	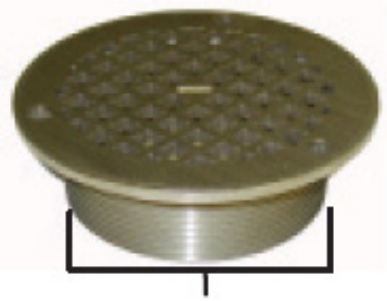 3-11/16” I.D. BODY UNIT O.D. IS 5-5/32” STRAINER GRID O.D. IS 5” **941145**-GRID ONLY
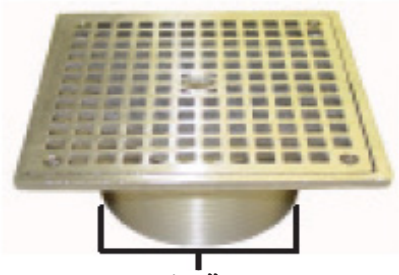 3-11/16” I.D. STRAINER GRID O.D. IS 4-5/8” BODY UNIT O.D. IS 4-15/16” **941159**-GRID ONLY	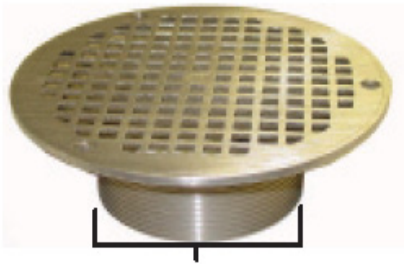 3-11/16 I.D. BODY UNIT O.D. IS 6-7/8” STRAINER GRID O.D. IS 6-5/8” **941152**-GRID ONLY	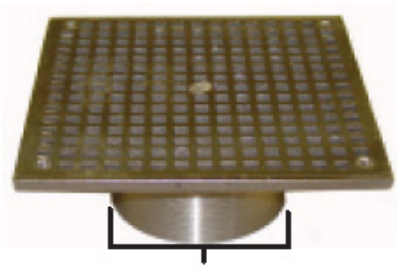 3-11/16” I.D. BODY UNIT O.D. IS 7” STRAINER GRID O.D. IS 6-3/4” **941161**-GRID ONLY
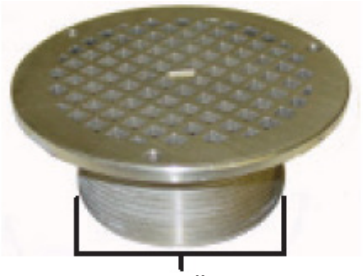 3-11/16” I.D. BODY UNIT O.D. IS 6-1/8” STRAINER GRID O.D. IS 6” **941149**-GRID ONLY	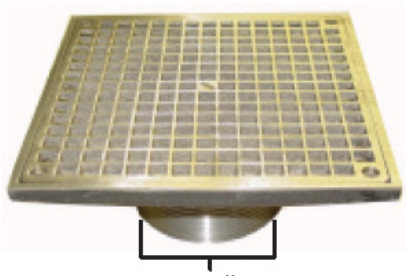 3-11/16” I.D. BODY UNIT O.D. IS 8-1/32” STRAINER GRID O.D. IS 7-5/8” **941162**-GRID ONLY	 4-1/2” **941148**-GRID ONLY

8

 6-3/4” WIDE X 2” DEEP ROUND CAST IRON **406621**	 6-1/2” X 6-1/2” X 4-3/8” DEEP WITH BAR HANDLE **406626**	 8-1/2” X 8-1/2” X 3-1/2” DEEP WITH BAR HANDLE **406622**
 6-1/8” X 4-3/8” DEEP WITH BAR HANDLE **406624**	 6-1/2” X 1-3/4” DEEP **406623**	 **404757** 4-3/4” x 3” TALL **404760** - SAME AS ABOVE EXCEPT WITH ACID RESISTANT COATING
 5-3/8” X 3” TALL **404755**	 4-9/16” X 5/16” THICK **404762**	 5-1/2” X 5/16” THICK **404761**
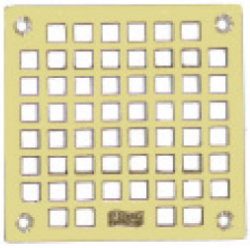 4-5/8” X 4-5/8” X 1/8” THICK **404764**	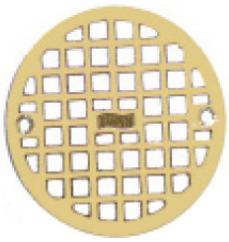 4-11/16” X 1/8” THICK **009135**	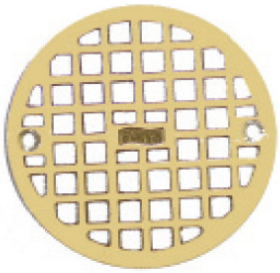 5-9/16” X 1/8” THICK **404763**

8

ADJUSTABLE GRIPPER
(FLUSH-TO-FLOOR REPLACEMENT STRAINER
STAINLESS STEEL - ADJUSTABLE FIT)

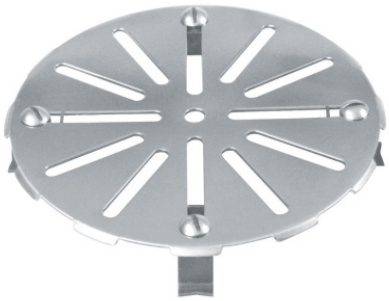

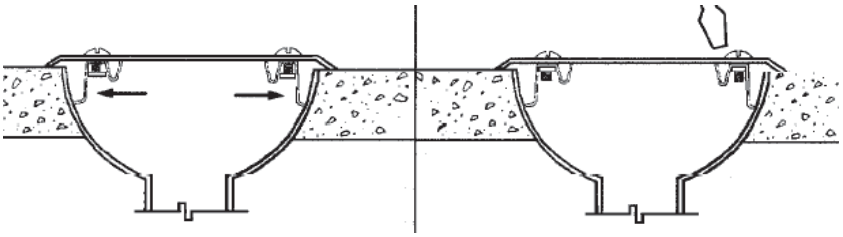

PLACE ADJUSTABLE GRIPPER OVER DRAIN OPENING AND SLIDE CLIPS OUTWARD TO CONTACT DRAIN WALLS.

TIGHTEN CLIP BOLTS WITH SCREWDRIVER TO HOLD ADJUSTABLE GRIPPER IN PLACE.

*HEAVY DUTY 12 & 14 GUAGE STAINLESS STEEL STRAINER TO REPLACE THOSE OLD, RUSTED, OR BROKEN CAST IRON STRAINERS AND BAR GRATES.
*SCREW-DOWN CLIPSPROVIDE A WIDE RANGE OF ADJUSTMENT.
*EXPOSED EDGES ARE SAFE AND SMOOTH AFTER INSTALLATION.
*BRIGHT ANNEALED FINISH IS STANDARD.

401295- 7-1/4" DIAMETER STRAINER FOR 3-1/4" TO 6-3/4" OPENINGS
401296- 9-1/4" DIAMETER STRAINER FOR 5-1/4" TO 8-3/4" OPENINGS

GRIPPER
(FLUSH-TO-FLOOR PIPE STRAINER
STAINLESS STEEL - SINGLE FIT)

*GRIPPING FINGERS FIT DOWNINSIDE PIPE DIAMETER.
*AVAILABLE TO FIT ALL TYPES OF PIPING 1-1/2" - 4".
*NO-TRIP SURFACE WITH DRAINAGE SLOTS AROUND THE PERIMETER.
*AVAILABLE IN HANGABLE BOXES FOR EASY DISPLAY.
*EXPOSED EDGES ARE SAFE AND SMOOTH AFTER INSTALLATION.
*COMPACT SERIES COMES STANDARD WITH A FROSTED FINISH.

FULL SIZE SERIES
401292- 3" DIAMETER STRAINER FOR 2" PIPING
* **401293-** 4" DIAMETER STRAINER FOR 3" PIPING
401294- 5" DIAMETER STRAINER FOR 4" PIPING
*FITS IN MOST ALL STRAINER BASKETS

TWIST

LEVER

ACS PART #	SINK OPENING DIAMETER	FACE FLANGE DIAMETER	STRAINER TYPE	HANDLE TYPE
406431	3”	4-1/8”	Flat	Twist
406432	3-1/2”	4-7/16”	Flat	Twist
406433	3”	4-1/8”	Flat	Lever
406434	3-1/2”	4-7/16”	Flat	Lever

EACH WASTE UNIT COMES WITH OPTIONAL OVERFLOW CONNECTION AND HAS AN ADAPTOR TO ALLOW FOR 1-1/2” OR 2” WASTE CONNECTION

STRAINER LOCKS

407909- FITS 3-7/16” DIAMETER
407910- FITS 3-1/8” DIAMETER

DRAIN REPAIR KIT
REPAIRS EITHER LARGE OR SMALL LEVER/TWIST DRAINS

406413

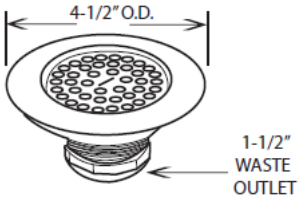

STAINLESS STRAINER ASSEMBLY, GRID TYPE, FLAT TOP FOR KITCHEN SINK.

400091

TWIST ARM

401581

LEVER DRAIN ARM

401047

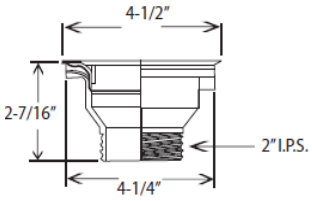

407938

CAST BRASS HEAVY-DUTY FLAT TOP STRAINER UNIT WITH STAINLESS TOP & SNAP IN GRID STRAINER. THIS UNIT CAN REPLACE A STANDARD BASKET STRAINER.
NOTE: SNAP IN STRAINER FOR THIS UNIT IS A 3-1/8” FOUR PRONG (ACS # 401040)

STRAINERS ONLY

401040 - KLN SINK DRAIN STRAINER 3-1/8” WITH 4 PRONGS
401250 - SINK DRAIN STRAINER 3-3/8” WITH 4 PRONGS

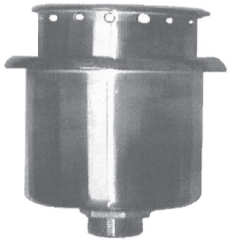

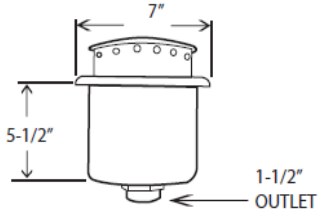

407903

DROP CHUTE STRAINER ASSEMBLY STAINLESS STEEL FOR USE WHEN REMOVING INSTITUTIONAL GARBAGE DISPOSERS.

DRAIN WASTE REDUCER ADAPTORS

401044 - 2” FIP x 1-1/2“ MIP
401045 - 1” FIP x 1-1/2“ MIP
(FOR BAR DRAINS)

8

STANDARD-KEIL
LEVER AND TWIST HANDLE WASTE OUTLETS

FLEXIBLE PLASTIC SUPPLY LINE FOR LAVATORY

400330 - 3/8" x 12"
400243 - 3/8" x 15"
400335 - 3/8" x 20"
401380 - 3/8" x 30"
401381 - 3/8" x 36"
401020 - 1/2" x 20"

400696 - 3/8" PVC COMPRESSION RING
407806 - 1/2" PVC COMPRESSION RING

FLEXIBLE PLASTIC SUPPLY LINE FOR COMMODE

400695 - 3/8" x 12"
400036 - 3/8" x 20"

400696 - 3/8" PVC COMPRESSION RING
407806 - 1/2" PVC COMPRESSION RING

CHROME PLATED SUPPLY TUBE FOR LAVATORY

403915 - 3/8" x 12"
403910 - 3/8" x 15"
403920 - 3/8" x 20"
402210 - 3/8" x 30"
402585 - 3/8" x 36"

401194 - 3/8" x 20" KIT W/ STOPS & FLANGES(PAIR)
401155 - 1/2" BRASS COMPRESSION RING
400810 - 3/8" BRASS COMPRESSION RING

CHROME PLATED SUPPLY TUBE FOR COMMODE

404011 - 3/8" x 12"
806017 - 3/8" x 20"

401155 - 1/2" BRASS COMPRESSION RING
400810 - 3/8" BRASS COMPRESSION RING

LAVATORY EASY HOOK UP LINES (BRAIDED PVC)

400706 - 3/8" COMP. x 1/2" FIP x 9"
400235 - 3/8" COMP. x 1/2" x 12"
407010 - 3/8" COMP. x 3/8" O.D. PLAIN COPPER x 12" (DELTA STYLE)
402048 - 3/8" COMP. x 1/2" x 16"
400240 - 3/8" COMP. x 1/2" x 20"
404295 - 3/8" COMP. x 1/2" x 30"
404290 - 1/2" x 1/2" x 12"
404285 - 1/2" x 1/2" x 20"
404280 - 1/2" x 1/2" x 30"
400232 - 1/2" x 1/2" x 48"

COMMODE SUPPLY LINES EASY HOOK UP STYLE (BRAIDED PVC)

406993 - 3/8" X 7/8" x 9"
400245 - 3/8" X 7/8" x 12"
400241 - 3/8" x 7/8" x 20"
400694 - 1/2" x 7/8" x 12"

COMMODE EASY HOOK UP LINES (BRAIDED STAINLESS STEEL)

404437 - 3/8" x 7/8" x 9"
404435 - 3/8"x 7/8" x 12"
400742 - 1/2" x 7/8" x 12"

LAVATORY/DISHWASHER EASY HOOK UP LINES, STAINLESS BRAIDED

407022 - 3/8" COMP. x 3/8" COMP. x 12"
404454 - 3/8" COMP. x 3/8" COMP. x 20
407044 - 3/8" COMP. x 3/8" COMP. x 30"
406601 - 3/8" COMP. x 3/8" COMP. x 48"
400244 - 3/8" COMP. x 3/8" COMP. x 60"
404425 - 3/8" COMP. x 1/2" FIP x 12"
404006 - 3/8" COMP. x 1/2" FIP x 16"
400247 - 3/8" COMP. x 1/2" FIP x 20"
404408 - 3/8" COMP. x 1/2" FIP x 30"
000989 - 3/8" COMP. x 1/2" FIP x 36"
400249 - 3/8" COMP. x 1/2" FIP x 48"

400246 - 3/8" COMP. x 3/8" O.D. PLAIN COPPER 12" (DELTA STYLE)
404436 - 3/8" COMP. x 3/8" O.D. PLAIN COPPER 20" (DELTA STYLE)
407134 - 1/2" COMP. x 1/2" FIP x 12"
403708 - 3/8" X 3/8" X 16" (DELTA STYLE)
000754 - 1/2" COMP. x 1/2" FIP x 20"
000990 - 1/2" COMP. x 1/2" FIP x 36"
400242 - 3/8" FIP x 3/8 FIP x 18" (FOR HYDROTECH)
404451 - 1/2" FIP x 1/2" FIP 20"
404223 - 1/2" FIP x 1/2" FIP 12"

NEW STYLE BALL STOP VALVES BY LEGEND

STRAIGHT PATTERN

400522 - 3/8" F.I.P. x 3/8" OD
400523 - 1/2" F.I.P. x 3/8" OD
400526 - 5/8" OD x 3/8" OD
400527 - 1/2" PEX x 3/8" OD
400528 - 1/2" PEX x 1/2" PEX
400524 -1/2" SWT x 3/8" OD

ANGLED PATTERN

400519 - 3/8" F.I.P. x 3/8" OD
400517 - 1/2" F.I.P. x 3/8" OD
400518 - 5/8" OD x 3/8" OD
400529 - 1/2" PEX x 3/8" OD
400516 - 1/2" SWT x 3/8" CO

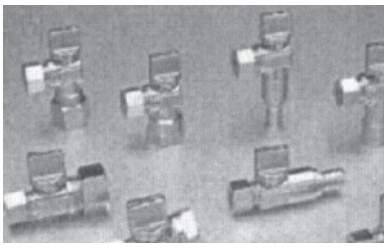

BRASSCRAFT STOP VALVE

401644 -3/8" IPS INLET x 3/8" IPS OUT**LET**

BRASSCRAFT PIGGYBACK VALVE

400574 - 3/8" FEM COMP X 3/8" COMP

ANGLE STOP (IPS x COMPRESSION)

401445 - 3/8" IPS x 3/8" OD COMP.
400305 - 1/2" IPS x 3/8" OD COMP.
406874 - 1/2" IPS x 1/2" OD COMP.

ANGLE STOP (COMP. x COMP.)

NOTE: 400316 HAS 1/2" FIP RISER NUT
400316 - 5/8" OD COMP. x 1/2" AND 7/16" OD COMP.
400710 - 5/8" OD COMP. x 3/8" OD COMP.
406882 - 5/8" OD COMP. x 1/2" OD COMP.
100925 - 5/8" OD COMP. x 3/8" OD COMP. W/ METAL STEM

STRAIGHT STOP (SWT x COMP.)

401446 - 1/2" SWT x 3/8" OD COMP.

STRAIGHT STOP (IPS x COMP)

404027 - 3/8" IPS x 3/8" COMP
401147 - 1/2" IPS x 3/8" COMP

STRAIGHT STOP (COMP x COMP)

404395 - 5/8" OD COMP x 3/8" OD COMP
408004 - 3/8" COMP x 3/8" COMP

ANGLE STOP (SWEAT COMPRESSION)

400306 - 1/2" SWT x 3/8" OD COMP W/ METAL STEM

EZ-CONNECT ADAPTER ADD A SECOND SUPPLY OUTLET TO ANY STOP

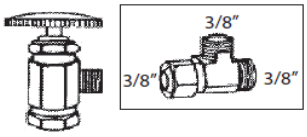

403997

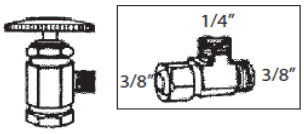

403996

NEW UNIVERSAL SUPPLY VALVES

407206- STRAIGHT

407205- ANGLED

FITS PEX, COPPER TUBE, CPVC, PVC, POLYBUTYLENE
QUARTER TURN BALL STOP
1/2" OD COMPRESSION x 3/8" NOM. COMPRESSION

LOOSE KEY SUPPLY STOPS

ANGLED-
407532 - 3/8" FIP x 3/8" COMP.
403102 - 1/2" SWT x 3/8"
404026 - 1/2" COMP. x 3/8" COMP.
404058 - 5/8" COMP x 3/8" COMP.

STRAIGHT-
403103 - 1/2" FIP x 3/8"

8

T&S ANGLE STOP

FOUR ARM HANDLE
ETERNA SPINDLE ASSEMBLY
OUTLET W/ COMPRESSION
NUT & SLEEVE TO FIT 1/2" OD
COPPER

T&S LOOSE KEY ANGLE STOP

408035 - 1/2" IPS FEMALE
INLET & OUTLET
406159 - 3/8" IPS FEMALE
INLET & OUTLET

T&S LOOSE KEY STRAIGHT STOP

808280 - 3/8" IPS
FEMALE INLET & OUTLET

NEEDLE VALVE

409200 - 1/4"
409201 - 3/8"

KOHLER LOOSE KEY STOP VALVE

803595-
KEY

401217 - 3/8" FIP INLET/
OUTLET
400326 - 1/2" FIP INLET/
OUTLET

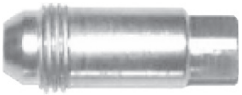

001319-
STEM ONLY
FOR LOOSE KEY STOP

KOHLER ANGLE STOP VALVES

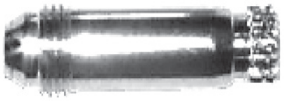

807609- STEM ONLY FOR
CROSS HANDLE STOP

409890 - 3/8" FIP
INLET/OUTLET
400326 - 1/2" FIP
INLET/OUTLET

802017 - REPLACEMENT CROSS HANDLE
804915 - SCREW FOR CROSS HANDLE
807712 - PACKING NUT
807710 - INTERNAL BRASS FRICTION
WASHER
802350 - INTERNAL O-RING/PACKING

ICEMAKER KIT

1/4" SUPPLY TUBING ONLY
405514 - PVC
008160 - COPPER

403995 - WITH PVC
SUPPLY TUBING
406447 - WITH COPPER
TUBING

SELF TAPPING SADDLE VALVE

FOR INSTANT CONNECTION
TO WATER SUPPLY LINES
WITHOUT SHUTTING OFF WATER

403994 - WITH 1/4" OUTLET
000494 - WITH 3/8" OUTLET

BRASSCRAFT PIGGYBACK VALVE

400574-3/8" FEM COMP. x
3/8" COMP.

REPAIR PARTS FOR BRASSCRAFT SUPPLY STOPS

805080-
BRASS STEM FOR
STRAIGHT STOPS

805081-
GRAY CELCON STEM FOR
STRAIGHT OR ANGLED STOPS

805079-
BRASS STEM FOR
ANGLED STOPS

801240-
HANDLE

801245 -
HANDLE SCREW

805085-
PACKING

805078-
WASHER

8

FAUCET SHANK NUT 1/2" FOR SUPPLY LINE

401168 - BRASS
400120 - PVC

BALLCOCK NUT 7/8"

401169 - BRASS
807263 - PVC

3/8" COMPRESSION TEE WITH 3/8" MIP BRANCH OUTLET

404759

DISHWASHER ELBOW FITTING (FOR SUPPLY LINE HOOK-UP)

403902

BRASS COMPRESSION SLEEVE

400811 - 1/4"
400810 - 3/8"
401155 - 1/2"
401156 - 5/8"
804017 - 7/8"
407146 - 1-1/2"
407145 - 1-1/4"

MALE ADAPTORS NICKEL PLATED BRASS & PLAIN BRASS

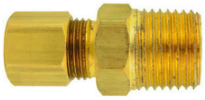

401185-3/8" COMP x 1/2" MIP
401188-1/2" COMP x 1/2" MIP
401187-1/2" COMP x 3/8" MIP
401184-3/8" COMP x 3/8" MIP
BRASS
408249-3/8" COMP x 3/8" MIP
405114-1/4" COMP x 1/4" MIP

BRASS COMPRESSION NUTS

401158 - 3/8" - CP BRASS
401189 - 1/2" - CP BRASS
804016 - 7/8" - ROUGH BRASS
403368 - 1/4" - ROUGH BRASS

PIPE ELBOWS 90 DEGREE

402590 - 3/8" COMP x 1/2" FIP-CP
408009 - 3/8" COMP x 1/2" MIP-RB

BRASS COMPRESSION CAP FOR STOP VALVE (ROUGH BRASS)

401157 - 3/8"

SWEAT CONNECTOR

401186 - 3/8 COMP x 1/2 SWT (CP BRASS)
401171 - 3/8 COMP x 1/2 SWT (BRASS)

FAUCET SHANK LOCK NUT 1/2" IPT

401193 - BRASS
400115 - PVC

PLASTIC COMPRESSION SLEEVE

407834 - 1/4"
400696 - 3/8"
407806 - 1/2"
400698 - 5/8"

FEMALE CONNECTOR

401183-1/2 FIP x 1/2 COMP CP BRASS
401175-3/8 FIP x 1/2 COMP CP BRASS
407137-1/2 FIP x 3/8 COMP BRASS
401182-1/2 FIP x 3/8 COMP CP BRASS
401181-3/8 FIP X 3/8 COMP CP BRASS
407149-1/2" FEM COMP THD x 3/8" COMP
(TO CONVERT 1/2" COMP STOP TO 3/8" COMP STOP-CP BRASS USES O RING **801841**)

COMPRESSION UNION (STRAIGHT BRASS)

401160 - 1/4" O.D. COMP x 1/4" O.D.
401161 - 3/8" COMP x 3/8" COMP FOR 3/8" O.D. LINE/TUBING
401163 - 5/8" O.D. COMP x 5/8" O.D. COMP FOR 1/2" I.D. COPPER
401164 - 7/8" O.D. COMP x 7/8 O.D. COMP FOR 3/4" I.D. COPPER

BRASS/NICKEL FITTINGS
NEW PAGE MADE FOR 264

QUICK-CONNECT WATER LINE INSTALLATION KIT

Includes everything you need to connect a cold water line.
Durable kink-resistant PEX water line.
No Soldering!
No Piercing!
100% shut-off!

This Kit contains:
Quick-connect insert with supply shut-off valve
1/4" PEX water line (25-foot length)
1/4" Union connection
1/4" Compression Nut and Ferrule

For Use With: Icemakers, Refrigerators, Humidifiers, Evaporative Coolers, Coffee Makers

ACS # 405207

WATER FILTERS AND HOUSINGS
NEW PAGE MADE FOR 266

HOSE TO PIPE ADAPTERS AND CONNECTORS
NEW PAGE MADE FOR 267

288-A ANTI-SIPHON VACUUM BREAKER CHROME FINISH (WATTS)

807612 - 3/8”
807613 - 1/2”
807614 - 3/4”
804898 - 1”

288-A VACUUM BREAKER REPAIR KITS

406845 - 1/4”, 3/8”
406846 - 1/2”
406847 - 3/4”, 1”

BLACK PVC BONNET FOR 288-A VACUUM BREAKER

807681 - 3/8”
807682 - 1/2”
807683 - 3/4”, 1”

CONBRACO ANGLED VACUUM BREAKER REPAIR KITS/PARTS

807910 - REPAIR KIT FOR 1/4”, 3/8” & 1/2”
807911 - REPAIR KIT FOR 3/4”
807913 - REPAIR KIT FOR 1”
807912 - COVER SCREW

BACKFLOW PREVENTER (INTERMEDIATE ATMOSPHERIC VENT)

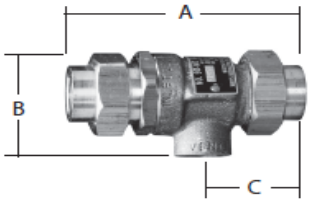

401023 - 1/2” (ROUGH BRASS) SWEAT
401024 - 3/4” (ROUGH BRASS) SWEAT

A= 4-3/8”
B= 2-17/32”
C= 1-27/32”

A= 4-15/32”
B= 2-15/32”
C=1-29/32”

*FOR USE ON HOT OR COLD WATER AND CAN BE USED UNDER CONTINUOUS PRESSURE. FOR LAB/DAIRY EQUIPMENT, PROCESSING TANKS, STERILIZERS, AND LOW HAZARD APPLICATIONS
*MAX. TEMP= 250 DEG. FAHRENHEIT
*MAX. PRESSURE = 175 PSI
*FEMALE UNION INLET AND OUTLET

WATTS FREEZE PROOF HOSE CONNECTION VACUUM BREAKER

403645 - 3/4” FHT x 3/4” MHT ROUGH BRASS
403650 - 3/4” FHT x 3/4” MHT CHROME

BACKFLOW PREVENTER WITH ATMOSPHERIC VENT-ROUGH BRASS (WATTS)

942003 - 1/4”
942002 - 3/8”

*DOUBLE CHECK DESIGN PROVIDING DEPENDABLE PROTECTION AGAINST BOTH BACK SIPHONAGE AND BACK-FLOW.
*ALL BRASS FEMALE INLET AND OUTLET CAN BE MOUNTED VERTICALLY OR HORIZONTALLY

HOSE CONNECTION VACUUM BREAKERS FOR BACK-SIPHONAGE PROTECTION (WATTS #8)

407150 - CHROME PLATED WITH NON-REMOVEABLE FEATURE

3/4” FHT x 3/4” MHT OUTLET UP TO 125 PSI/180 DEG F

IMPORTANT!: NON-REMOVE-ABLE ONCE INSTALLED
WARNING: DO NOT USE ON FROST FREE HYDRANTS NOT FOR FREEZING CONDITIONS

ANTI-SIPHON VACUUM BREAKER (WOODFORD)

USED TO PROTECT HOSE CONNECTIONS FROM CONTAMINATION WHEN TEMPERATURES DO NOT GO BELOW FREEZING. USES INCLUDE LAUNDRY TUBS, UTILITY SINKS, BOILER ROOM HOSE BIBBS AND OUTSIDE HOSE BIBBS IN NON FREEZING AREAS

402810 - 3/4” MHT x SMALL MALE THREAD, CP BRASS
402820 - 3/4” MHT x LARGE MALE THREAD, BRASS
402815 - 3/4” MHT x LARGE MALE THREAD, CP BRASS
807595 - 3/4” MHT x 3/4” FHT BRASS WITH SET SCREW

402830 - MHT x LARGE FEMALE THREAD, VANDAL PROOF SET SCREW. 2-1/16” LONG

ANTI-SIPHON VACUUM BREAKER FITS HOSE BIBBS AND SILLCOCKS

3/4” FHT x 3/4” MHT WITH VANDAL PROOF SET SCREW NON-FREEZING

920004

ANTI-SIPHON VACUUM BREAKER (CASH ACME)

410200 - 1/2” BRASS

WATER HAMMER ARRESTER

406509 - 1/2” MIP (6-1/2“ LONG)
406639 - 3/4” MIP (8-3/4“ LONG)
405910 - 3/4” MIP (12” LONG)
303478 - 1-1/4”

8

"P" TRAP BRASS TUBULAR

400855- 1-1/4" 17 GA
400866- 1-1/4" x 1-1/2" 17 GA
400865- 1-1/2" 17 GA
400860- 1-1/4" 20 GA
400870- 1-1/2" 22 GA

"J" BEND BRASS TUBULAR

401586 - 1-1/4" 17 GA
401587 - 1-1/2" 17 GA
400715 - 1-1/4" 20 GA
400720 - 1-1/2" 20 GA

"J" BEND WITH CAPTURED NUT BRASS TUBULAR

807249 - 1-1/2" 17 GA
400219 - 1-1/4" 17 GA

WALL BEND TUBULAR BRASS

402855 - 1-1/4" X 8" 17 GA
401300 - 1-1/4" x 12" 17 GA
401145 - 1-1/4" x 15" 17 GA
402860 - 1-1/2" x 9" 17 GA
401390 - 1-1/2" x 12" 17 GA
400752 - 1-1/2" x 15" 17 GA

HIWAY CENTER OUTLET SINK WASTE

402850 - 16" DIRECT CONNECT 17 GA

WASTE ARM SLIP JOINT TYPE

404911 - 1-1/2" x 15" 17 GA
404675 - 1-1/2" x 15" 20 GA
406995 - 1-1/2" x 20" 17 GA
407904 - 1-1/2" x 24" 17 GA

S-TRAP

400875 - 11-1/4" 20 GA
000825 - 1-1/2" 17 GA
000864 - 1-1/4" 17 GA
400880 - 1-1/2" 22 GA

SOLID CAP NUT

404568 - CP 1-1/4" DIE CAST SOLID CAP NUT (USES **800112** CAST IRON CAP WASHER)

ZURN SINK TRAP WITH CLEAN-OUT

402807 - 1 1/2" SJ X 1 1/2" IPT

SLIP JOINT WASHER KIT

802099

QTY	Part No.	Description
6	**402100**	1-1/4" SLIP JOINT WASHER- FLANGED
48	**800001**	1-1/2" MALE SLIP JOINT WASHER
12	**800002**	1-1/2" SLIP JOINT WASHER
48	**800005**	1-1/4" SLIP JOINT WASHER
12	**800010**	1-1/4" x 1-1/2" SLIP JOINT WASHER
6	**800095**	1-1/4" POLY SLIP JOINT WASHER
6	**800100**	1-1/2" BEVELED POLY SLIP JOINT WASHER
6	**800105**	1-1/2" FLANGED POLY WASHER
12	**800825**	2" SLIP JOINT WASHER
24	**800830**	1-1/2" SLIP JOINT WASHER
12	**800835**	1-1/4" SLIP JOINT WASHER

CP CAST SLIP JOINT NUT ASSEMBLIES (INCLUDES RUBBER WASHER & BRASS FRICTION RING)

400250 - 1-1/4"
400255 - 1-1/2"
400261 - 2"
406903 - 1-1/2" x 1-1/4"

BRASS FRICTION RINGS FOR TUBULAR

400001 - 1-1/4"
400560 - 1-1/2"
***920291** - 1-1/2"
400005 - 1-1/4" x 1-1/2"
400565 - 2"
*NEOPRENE COATED FOR SLOAN

SLIP JOINT NUTS ONLY CP CAST BRASS

400256 - 1-1/2"
400251 - 1-1/4"
400265 - 1-1/4" x 1-1/2"
400260 - 2"

SLIP JOINT WASHER ONLY (RUBBER)

800002 - 1-1/2" THIN WALL
800001 - 1-1/2" MEDIUM WALL
800005 - 1-1/4" MEDIUM WALL
800830 - 1-1/2" HEAVY WALL
800010 - 1-1/4" x 1-1/2" HEAVY WALL
800825 - 2" HEAVY WALL

8

END OUTLET SINK WASTE
1-1/2" x 16" 17 GA

401011 - DIRECT CONNECT FLANGE

DOUBLE OFFSET
SLIP JOINT TUBES

408790 - 1-1/4" x 11-1/2", 22 GA
408791 - 1-1/2" x 11-1/2", 22 GA

HIWAY WASTE ARM
DIRECT CONNECT, FLANGED

400725 - 1-1/2" x 15" 17 GA
400021 - 1-1/2" x 7" 20 GA
402060 - 1-1/2" x 20" 17 GA
406643 - 1-1/2" x 24" 17 GA

EXTENSION TUBE
DOUBLE SLIP JOINT

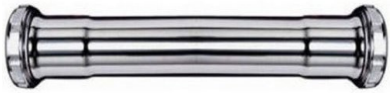

808013 - 1-1/2" x 16" 20 GA
407500 - 1-1/4" x 16" 20 GA

P.O. PLUG WITH CHAIN &
STOPPER WITH OVERFLOW

404009 - ONE PIECE, 1-1/4"x 5" 22GA
404002 - ONE PIECE, 1-1/4" x 8" 22GA
404008 - TWO PIECE, 1-1/4" x 5" 22GA
402055 - TWO PIECE, 1-1/4" x 12" 17GA

FLANGED TAILPIECE

401420 - 1-1/2" x 2" FLANGED SHORT TAILPIECE. 17 GA

END OUTLET HIWAY SANI-TEE
FLANGE

400730 - CAST BRASS HIWAY SANI-TEE WITH 4" 17 GA TAILPIECE
401420 - FLGD TAILPIECE ONLY 1-1/2" x 2" 17 GA

DOUBLE SLIP JOINT
EXTENSION COUPLING 20 GA

401215 - 1-1/4"
401216 - 1-1/2"

45° SLIP JOINT UNION - C.P.

404550 - 1-1/4" 17GA
404551 - 1-1/2" 17GA

END OUTLET SANI-TEE
SLIP-JOINT

402200 - CAST BRASS SANI-TEE WITH 4" 17 GA TAILPIECE

THREE WAY SLIP TEE

406915 - 1-1/2" CAST BRASS

8

P-TRAP WITH CLEAN OUT

406894 - 1-1/4" 17 GA
401210 - 1-1/2" 17 GA
402185 - 2" 17 GA W/CAST J BEND
NOTE: 1-1/4 & 1-1/2 DON'T HAVE CAST J-BEND

ANTI-SIPHON P-TRAP 17 GAUGE CHROME

402188 - 1-1/2" 17 GA

THREADED TUBES (BOTH ENDS)

401391 - 1-1/4" x 8" 17 GA
401393 - 1-1/2" x 8" 17 GA
400750 - 1-1/4" x 8" 20 GA
401021 - 1-1/4" x 12" 17 GA
401394 - 1-1/2" x 12" 17 GA
406645 - 1-1/4" x 18" 17 GA
400900 - 1-1/4" x 12" 20 GA
400755 - 1-1/2" x 12" 20 GA

J-BEND WITH CLEAN OUT

409367 - 1-1/2" 17 GA

SLIP JOINT EXTENSION TUBE WITH NUT

407011 - 1-1/4" x 6" 17 GA
401588 - 1-1/4" x 6" 20 GA
406992 - 1-1/2" x 6" 17 GA
401585 - 1-1/4" x 8" 17 GA
400740 - 1-1/2" x 8" 17 GA
404400 - 1-1/4" x 12" 17 GA
404231 - 1-1/2" x 12" 17 GA

THREADED TUBE (ONE END)

409334 - 1-1/4" x 6" 17 GA
401021 - 1-1/4" x 12" 17 GA
401401 - 1-1/2" x 12" 17 GA

POP-UP DRAIN UNITS

409367 - 1-1/2" 17 GA

DRAIN GRID ASSEMBLY CAST BRASS W/TAILPIECE

408219 - 1-1/4 x 6-1/2"
408228 - 1-1/4" x 8"
408229 - 1-1/4" x 12"
408339 - 1-1/4" x 7"/AMS

SOLDER EXTENSION TUBE

401029 - 1-1/4" x 6" 20 GA
401028 - 1-1/4" x 8" 20 GA
406880 - 1-1/4" x 12" 17 GA
404405 - 1-1/2" x 12" 17 GA

DOUBLE FLANGED TAILPIECE

400745 -DOUBLE FLANGED TAILPIECE 1-1/2" x 16" 17GA
800105 -HARD 1-1/2" FLANGED POLY WASHER
402100 -SOFT 1-1/2" FLANGED POLY WASHER
800111 -THIN 1-1/2" CLOTH INSERTED WASHER
800112 -THICK 1-1/2" CLOTH INSERTED WASHER

STRAIGHT TAILPIECES (FLGD ONE END)

401395 - 1-1/4" x 12" 17 GA
401396 - 1-1/2" x 8" 17 GA
400726 - 1-1/2"x 12" 17 GA
400751 - 1-1/2 x 6" 17 GA
402190 - 2" x 6" 17 GA
402655 - 2" x 8" 17 GA
400747 - 1-1/2" x 8" 20 GA
408241 - 1-1/2" x 1-1/4" x 8" 20 GA (REDUCING TAILPIECE)

FLANGED TAILPIECE WASHERS (1-1/2")
800105 - POLY, HARD
402100 - SOFT RUBBER
CLOTH INSERTED TAILPIECE WASHERS
800825 - 2"
800111 - 1-1/2" -THIN
800112 - 1-1/2" -THICK

GRID DRAIN

GRID DRAIN, 1-1/2" WITH 4" TAILPIECE AND OVERALL LENGTH OF 7" FOR VITREOUS CHINA OR ENAMELED SCRUB SINK WITHOUT OVERFLOW. POLISHED CHROME. OVERALL LENGTH OF STRAINER BODY WITHOUT TAILPIECE IS 2-3/4"

407043 - REPLACEMENT WASHER ONLY, 3" O.D. x 1-7/8" I.D. x 1/8" THICK
- STRAINER ONLY, 1-15/16" O.D.

WHEELCHAIR LAVATORY DRAINS - 17 GUAGE

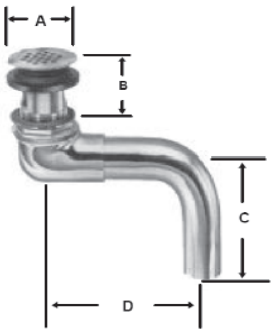

407001 - GENERIC, A= 2-1/4", B=1-1/4"-2", C=8", D=5-3/8"
404012 - AMS, A=2-3/16", B=1-3/8"-2, C=4-13/16, D=4-1/2"

DISHWASHER BRANCH TAILPIECE (DIRECT CONNECT)

407049 - FOR 3/4" SWEAT 7/8" O.D. OR HOSE CLAMP CONNECTION- 8", 17 GA

DISHWASHER BRANCH TAILPIECE (SLIP JOINT)

407051 - FOR 3/4" SWEAT (7/8" O.D. OR HOSE CLAMP CONNECTION)
1-1/2" X 8", 17 GA

DISHWASHER BRANCH TAILPIECE (SLIP JOINT)

407052 - FOR 1/2" SWEAT (5/8" O.D.) 8", 17 GA

DISHWASHER BRANCH TAILPIECE (DIRECT CONNECT)

407050 - FOR 1/2" SWEAT (5/8" O.D.) 8", 17 GA

WASTE AND OVERFLOW SHOE

400700 - 1-1/2" 17GA W/ CHROME SHOE PLUG (5" THREADED TUBE)

406704 - DRAIN SCREEN ONLY
406705 - SCREW ONLY- FOR STRAINER
406886 - GASKET FOR SHOE PLUG

TRAP ADAPTOR BRASS

406858 - 1-1/2" SJ x 1-1/2" FIP
406803 - 1-1/4" SJ x 1-1/2" FIP
406912 - 1-1/4" SJ x 1-1/4" FIP

TRAP ADAPTOR BRASS

406863 - 1-1/2" SJ x 1-1/2" MIP x 1-1/2" SWT
406804 - 1-1/4" SJ x 1-1/2" MIP x 1-1/2" SWT

8

TUB SHOE GASKET
(HARD RUBBER)

406886 - 2-5/8 OD, 1-11/16 ID, 3/16 THICK
406892 - 2-15/16 OD, 1-13/16 ID, 1/8 THICK
406891 - 2-3/4 OD, 1-13/16 ID, 3/16 THICK
407019 - 2-3/4 OD, 1-7/8 ID, 1/8 THICK

OVERFLOW GASKET
(HARD RUBBER)

404446 - 3" OD, 1-3/4 ID
404445 - 3-1/4 OD, 2-3/8" ID

OVERFLOW GASKET
(SPONGE RUBBER)

407006- 3-1/4" O.D. X 2-1/4" I.D.

BATH DRAIN FACE PLATE
WITH TRIP LEVER (C.P.)
WITH COIL SPRING WITH SCREWS

400050

BLANK TUB FACE PLATE WITH
SCREWS

401515 - 1 HOLE C.P.)
400175 - 2 HOLE (C.P.)

TUB SRAINER COVER, C.P.

402580 - (REPLACES GERBER)
2-15/16 O.D.(WITH SCREW)

BATH DRAIN FACE PLATE
ASSEMBLY FOR STERLING

808005

BRASS TRIP LEVER WASTE
ASSEMBLY FOR TUB

400701

TUB BUCKET & LINKAGE
ALL BRASS

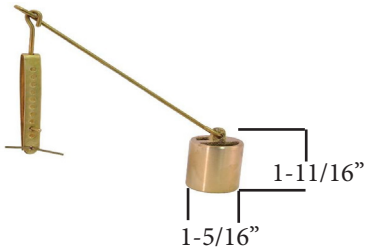

406941-FITS PRICE PFISTER AND MANY OTHERS
808085-SAME AS ABOVE BUT PVC FOR PRICE PFISTER

FACE PLATE CONVERSION BAR

402225

SCREW FOR TUB FACE PLATE

400180 - SLOTTED HEAD
1/4" x 20 x 1-1/2"

8

TUB STOPPER UNITS, LIFT & TURN , PUSH-PULL, TIP TOE & RAPID FIT

THREADS PER INCH.
USE THREAD GAUGE
#**200001** TO DETERMINE.

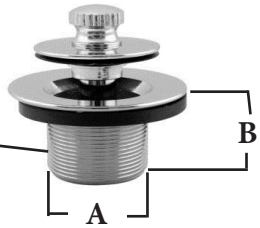

ACTUAL SIZE	TRADE DESIGNATION	(B) STRAINER BODY DEPTH	ACS PART NUMBER	
			LIFT AND TURN	PUSH-PULL WTC
1-5/8" OD, 16 THDS	1-3/8", 16 THDS	1-3/8"	**400374**/JRM	**402080**
1-7/8"OD, 11-1/2 THDS		1-3/8"	**402056**/GER	
1-7/8"OD 11-1/2 THDS	1-1/2", 11-1/2 THDS	1-1/4"	**400218**/JRM	**402070**
1-7/8"OD 11-1/2 THDS	1-1/2", 11-1/2 THDS	1"	**400220**/JRM	
1-7/8"OD 11-1/2 THDS	1-1/2", 11-1/2 THDS	1-3/16"	**408220**/GEN	
1-5/8" OD, 14 THDS		1-1/16"	**406983**/IBR	
1-5/8" OD, 14 THDS	1-3/8", 14 THDS	1-3/8"		**402072**
1-5/8" OD, 14 THDS	1-3/8", 14 THDS	1-1/4"	**402457**/SAY	
1-3/4" OD, 14 THDS WITH BUSHING		1-1/8"		**402073**
1-7/8" OD, 14 THDS WITH BUSHING		1-3/8"		**402074**
1-13/16" OD, 16 THDS WITH BUSHING		1-3/8"		**402455**
1-5/8" OD, 16 THDS	1-3/8", 16 THDS	1-1/8"	**400217**/JRM	**402071**
1-7/8" OD, 16 THDS		1-1/4"	**406884**/GEN	
2-1/8" OD, 16 THDS WITH BUSHING	LARGE KOHLER	1-3/8"	**406884**	**402075**
1-3/4" OD, 12 THDS		1-3/8"		**402076**
1 5/8 OD, 16 THDS	1-3/8", 16 THDS			**402082**
1-5/8" OD, 16 THDS	TIP TOE	1-3/8"	**400035**	TIP TOE
1-7/8"OD 11-1/2 THDS	TIP TOE	1-3/8"	**400030**	TIP TOE
1-7/8"OD 11-1/2 THDS	RAPID FIT	1-3/8"	**409102**	RAPID FIT

PUSH PULL STOPPER INSERT FOR PUSH-PULL ONLY

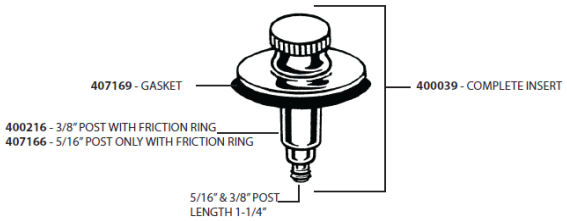

NOTE: **806450** - COMPLETE INSERT HAS 1/4" POST ONLY

TIP TOE STOPPER WITH 3/8" STEM

805840

FOOT ACTUATED STOPPER INSERTS

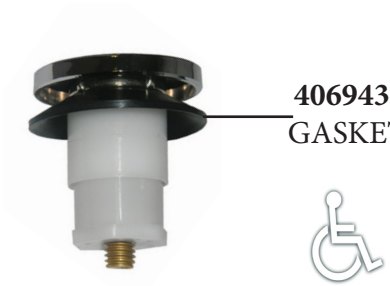

807925- FOOT ACTUATED 5/16" PVC
805840- FOOT ACTUATED 3/8" PVC

TOE-TOUCH TUB STOPPER KIT

*WITH TOE-TOUCH CLOSURE
*INCLUDES 1-7/8" -11-1/2 TPI COURSE THREAD STRAINER BODY, NO SPRINGS TO WEAR OUT
*USES REPLACEMENT STOPPER **807925** (SOLD SEPARATELY)

400030

TOE-TOUCH TUB STOPPER KIT

*WITH TOE-TOUCH CLOSURE
*INCLUDES 1-5/8" -16 TPI COURSE THREAD STRAINER BODY, NO SPRINGS TO WEAR OUT
*USES REPLACEMENT STOPPER **807925** (SOLD SEPARATELY)

400035

TOE-TOUCH REPLACEMENT STOPPER

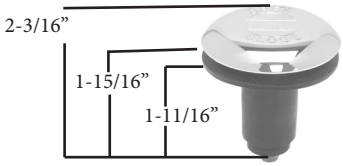

SCREW SIZE 3/8"
ACTIVATED BY NEOPRENE BOOT
NOSPRINGS TO WEAR OUT

400159

TOE-TOUCH REPLACEMENT STOPPER

400159

SHOWER DRAIN ASSEMBLY

GERBER LIFT & TURN (COMPLETE)

BRASS ADAPTER BUSHINGS

402077 - 1-9/16" ID-16THD TO 1-7/8" OD-11-1/2" THD, 15/16" HEIGHT
406973 - 1-9/16" ID-16 THD TO 1-13/16" OD-16 THD, 7/8" HEIGHT
402078 - 1-13/16" ID-11-1/2" THD TO 2-1/8" OD-16 THD, 15/16" HEIGHT

STOPPER WITH REVERSIBLE STEM

402094

EPOXY PRESSFLO TUB CLOSURE

402058

EPOXY PUSH-PULL TUB CLOSURE

402085

FLIP-IT TUB STOPPER

*FITS DRAINS 1-3/8" TO 1-5/8"
*COMPLETE WITH O-RINGS TO FIT MOST WASTE AND OVERFLOW SHOES
*CHROME PLATED

402570

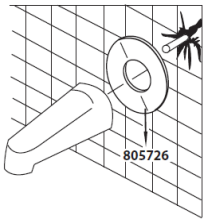

COVER PLATE COVERS UP DAMAGED TILE AND POOR ROUGH-INS
805726 - 3-1/2" O.D. x 1-3/4" I.D. ATTRACTIVE CHROME FINISH/PVC

400275 - TUB SPOUT
CHROME PLATED DIE CAST WITH 1/2" NOSE END CONNECTION (WITHOUT DIVERTER)
500586 - WITH 3/4" NOSE MONT AND NYLON BUSHING TO CONVERT TO 1/2" (WITHOUT DIVERTER)

400352 - UNIVERSAL TUB SPOUT WITH DIVERTER
400353 - UNIVERSAL TUB SPOUT WITHOUT DIVERTER

400080 - CHROME PLATED DIE CAST WITH 1/2" NOSE END CONNECTION (WITH DIVERTER)
400042 - 3/4" NOSE MOUNT (WITH DIVERTER)

400065 - TUB SPOUT
CHROME PLATED DIE CAST WITH 1/2" SLIP TYPE REAR CONNECTION. (WITH DIVERTER AND SET SCREW)
407996 - SAME AS ABOVE EXCEPT GENUINE MOEN

401453- ALSONS
DIVERTER SPOUT HAS 1/2" OR 3/4" FIP REAR CONNECTION - 6-1/2" LONG

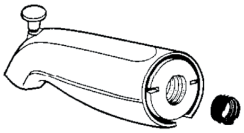

400041 - TUB SPOUT
CHROME DIE CAST WITH 1" ADJUSTABLE FIT CONNECTS WITH 1/2" OR 3/4" BUSHING. (W/ DIVERTER)

1/2" x 3/4" FACE BUSHING ONLY
400921 - BRASS
406914 - PVC

400060 - REAR MOUNT SLIP TYPE NO DIVERTER WITH SET SCREW

402081- DELTA
SPOUT HAS A BRASS ADAPTOR WITHOUT O-RING AND 1/2" FIP CONNECTION. ALLOWS FOR 1" ADJUSTMENT

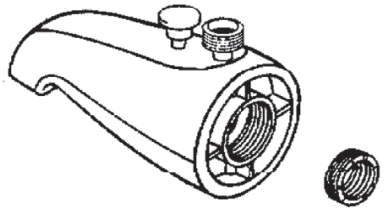

801710 - TUB DIVERTER SPOUT WITH TOP 1/2" IPS HOSE CONNECTION FOR PERSONAL SPRAY. COMES WITH 3/4" x 1/2" PVC BUSHING, REAR MOUNT

407996 - MOEN
SLIP DIVERTER SPOUT FOR 1/2" COPPER PIPE.

400274 - GENUINE MIXET WITH 1/2" SLIP CONNECTION

808819- DELTA
PULL DOWN DIVERTER SPOUT WITH BRASS ADAPTOR WITHOUT O-RING AND 1/2" FIP CONNECTION. ALLOWS FOR 1" ADJUSTMENT

8

STANDARD SPOUT REPAIR KIT DIVERTER GATE REPLACEMENT

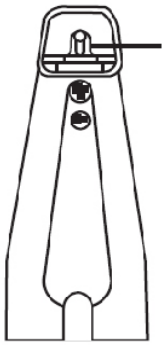

TO REMOVE OLD GATE USE SIDECUTTERS OR NEEDLE NOSE PLIERS TO BEND OR CUT ONE LEG AWAY FROM NOTCH IN LIFT ROD

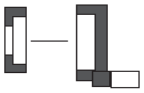

PUT NEW SEAL AND NEW GATE TOGETHER AS SHOWN

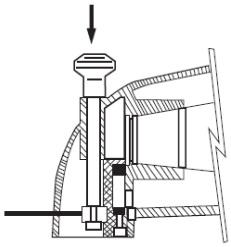

PUSH GATE BACK INTO NOTCH ON LIFT RODS

406916

DELTA SPOUT REPAIR KIT

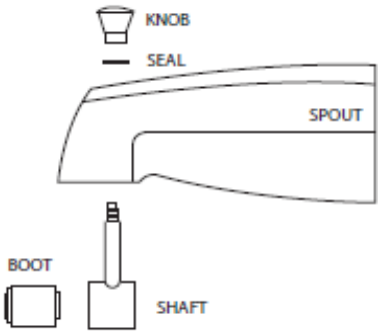

401280- THIS ITEM IS DISCONTINUED AND AVAILABLE ONLY WHILE SUPPLIES LAST

TUB DIVERTER SPOUT REPAIR KIT- ZIN PLAZ

406916

SPLIT FLANGE ESCUTCHEONS (CHROMED PLASTIC)

SPLIT FOR EASY INSTALLATION!

401455 - FOR 3/8" IRON PIPE OR 1/2" COPPER PIPE, 2-9/16" O.D.
***401520 - FOR 1/2" IRON PIPE OR 3/4" COPPER PIPE, 2-13/16" O.D.**
404540 - FOR 3/4" IRON PIPE, 3" O.D.
404530 - FOR 1" COPPER PIPE, 3-1/16" O.D.
406895 - FOR 1" IRON PIPE, 3-1/4" O.D.
401521 - FOR 1-1/4" COPPER PIPE, 3-5/16" O.D.
401522 - FOR 1-1/4" IRON PIPE OR 1-1/2" COPPER PIPE, 3-9/16" O.D.
401450 - FOR 1-1/2" IRON PIPE & 1-1/2" PVC, 3-7/8" O.D.
404535 - FOR 2" IRON PIPE & 2" PVC, 4-11/16" O.D.
404545 - FOR 2" COPPER PIPE, 4-3/16" O.D.

*** CAN BE USED FOR SHOWER ARM FLANGE**

DEEP BOX ESCUTCHEON (CHROMED PLASTIC)

406928 - 1-1/4" I.D. FOR "P" TRAP, 1-5/8" DEEP
406929 - 1-1/2" ID.D FOR "P" TRAP, 1-5/8" DEEP

FIRE SPRINKLER HEAD ESCUTCHEON (CHROMED PLASTIC)

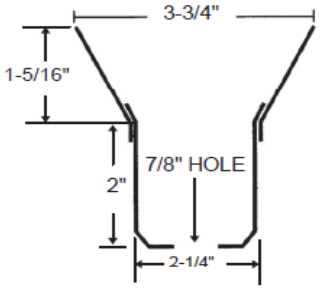

401452

FLEXIBLE ELBOW WITH STAINLESS STEEL CLAMPS

402765 - 1-1/2 x 1-1/2

CLEAN OUT OR TEST CAP

402780 - 1-1/2”
402790 - 2”
402865 - 3”
402870 - 4”

DRAIN & TRAP CONNECTOR WITH STAINLESS STEEL CLAMPS

402895 - 1-1/2 x 1-1/2 OR 1-1/4
402900 - 1-1/4 x 1-1/2 TUBULAR TO 2” C.I. OR PVC

FLEXIBLE TEE WITH STAINLESS STEEL CLAMPS

402775 - 1-1/2 x 1-1/2 x 1-1/2

FLEXIBLE TRAP WITH STAINLESS STEEL CLAMPS

402770 - 1-1/2” OR 1-1/4”

NO HUB COUPLING

400315 - 1-1/2”
400320 - 2”
402915 - 3”
402920 - 4”
403341 - 2” x 1-1/2”
403342 - 3” x 2”
403343 - 4” x 3”

SEWER RELIEF PLUGS ELIMINATES COSTLY DAMAGE BY SEWER BACK-UPS

408021 - 3”
408673 - 3-1/2”
408022 - 4”

FLEXIBLE COUPLING WITH STAINLESS STEEL CLAMPS

400031 - 1-1/4 x 1-1/4
402875 - 1-1/2 x 1-1/2
402880 - 2 x 2
408660 - 2 x 1-1/2
408661 - 3 x 2
408662 - 4 x 3
402890 - 4 x 4
408663 - 6 x 4
408664 - 6 x 6

HOSE CLAMPS - STAINLESS STEEL

ACS#	SIZE	
804840	7/32	5/8
804841	7/16	25/32 (#6)
804842	1/2	29/32
404786	9/16	1-1/16 (#10)
404802	11/16	1-1/4 (#12)
804843	13/16	1-1/2 (#16)
804844	13/16	1-3/4 (#20)
804845	1-1/16	2
804846	1-5/16	2-1/4 (#28)
804847	1-9/16	2-1/2 (#32)

ACS#	SIZE	
404803	1-13/16	2-3/4 (#36)
404804	2-1/16	3
404805	2-15/16	3-1/4
404806	2-9/16	3-1/2
404807	2-13/16	3-3/4
404808	3-1/16	4
404809	3-5/16	4-1/4
404810	3-9/16	4-1/2
404811	1-7/8	5

PVC SCHEDULE 40 RECESSED HEAD CLEANOUT PLUG

406232 - 2”
400971 - 3”
400972 - 3-1/2”
400970 - 4”
407124 - 6”

PVC SHEDULE 40 CLEANOUT PLUG

400975 - 1-1/2”
407100 - 2”
400940 - 3”
400974 - 4”
407125 - 6”

BRASS CLEANOUT PLUG RAISED HEAD

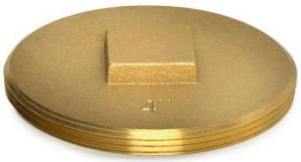

ACS#	TRADE SIZE	*O.D.
403115	1-1/4”	
404030	1-1/2”	1-7/8”
406866	2”	2-3/8”
406867	2-1/2”	3-13/16”
404015	3”	3-3/8”
404305	3-1/2”	3-15/16”
404025	4”	4-7/16”
404041	5”	5-1/2”
404042	6”	6-9/16”
404043	8”	

***O.D. DIMENSIONS ARE THE SAME FOR PVC**

BRASS CLEANOUT PLUG RECESSED HEAD

ACS#	TRADE SIZE	*O.D.
406865	1-1/2”	1-7/8”
404023	2”	2-3/8”
406868	2-1/2”	2-13/16”
404010	3”	3-3/8”
404005	3-1/2”	3-15/16”
404096	4”	4-7/16”
404690	5”	5-1/2”
408236	6”	6-9/16”
404044	8”	

***O.D. DIMENSIONS ARE THE SAME FOR PVC**

CLEAN OUT PLUG WRENCH SET

205508 -
11 PIECES
11” SLIDING
T-HANDLE

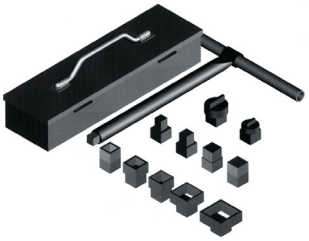

8

TEST PLUG

*FITS CAST IRON AND PLASTIC PIPE
*GALVANIZE STEEL FLANGES
*MOLDED RUBBER GASKET

404221 - 1-1/2”
404210 - 2”
404215 - 3”
404220 - 4”
404225 - 5”
404230 - 6”

T-CONE TEST PLUG

*TEST UP TO THREE FLOORS AT ONCE
*COMBINATION TEST PLUG AND CLEANOUT
*FITS SHEDULE 40 DWV PIPE
*POSITIVE SEALING
*NO METAL PARTS TO RUST

406706 - 1-1/2”
406707 - 2”
403903 - 3”
403904 - 4”
406708 - 6”

EXTENSION COVERS

408120 - 3” DIAMETER
408121 - 4”DIAMETER
406836 - 5” DIAMETER
408122 - 6” DIAMETER
406837 - 7” DIAMETER
408123 - 8” DIAMETER
406838 - 10” DIAMETER

STAINLESS STEEL BOLTS FOR EXTENSION COVERS

406104 - 1/4” x 2-1/4”
406105 - 1/4” x 4”
406106 - 1/4” x 6”

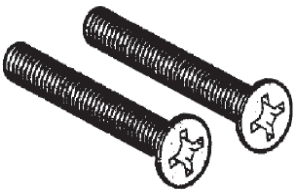

SURE VENT

*Offers unmatched breathing capability with a patented sealing system.
*Complies to ANSI/ASSE 1051 A & B
*For use as a secondary vent

405160 - 1-1/2” SURE VENT 6 DFU AAV WITH 1 1/2” PVC SCHEDULE 40 ADAPTOR
403116 - SURE VENT AIR ADMITTANCE VALVE 500 DFU WITH 3” x 4” PVC SCHEDULE 40 ADAPTOR

8

PLASTIC SLIP NUT/ TWO PIECE

400226 - 1-1/4”
400227 - 1-1/2”

PLASTIC SLIP JOINT NUT WITH WASHER

408926 - 1-1/4”
407014 - 1-1/2”

PVC SLIP JOINT COUPLING

406896 - 1-1/2”

PVC SLIP JOINT TEE

401490 - 1-1/2”

PVC SLIP JOINT ELBOW, 45º

406875 - 1-1/2”

PVC SLIP JOINT ELBOW, 90º

401495 - 1-1/2”

PLASTIC SLIP JOINT NUT ONLY (W/EARS)

404475 - 1-1/4”
404470 - 1-1/2”

PVC DISPOSAL KIT 1-1/2” WITH TELESCOPIC EXTENSION

401555

SLIP JOINT WASHER KIT

802099

THIS KIT CONTAINS THE FOLLOWING

QTY	PART NO.	DESCRIPTION
6	**402100**	SLIP JOINT WASHER- FLANGED
48	**800001**	1-1/2” MALE SLIP JOINT WASHER
12	**800002**	1-1/2“ SLIP JOINT WASHER
48	**800005**	1-1/4” SLIP JOINT WASHER
12	**800010**	1-1/4“ x 1-1/2” SLIP JOINT WASHER
6	**800095**	1-1/4” POLY SLIP JOINT WASHER
6	**800100**	1-1/2” BEVELED POLY SLIP JOINT WASHER
6	**800105**	1-1/2” FLANGED POLY WASHER
12	**800825**	SLIP JOINT WASHER 2
24	**800830**	1-1/2” SLIP JOINT WASHER
12	**800835**	1-1/4” SLIP JOINT WASHER

PVC TRAP ADAPTOR

406871 - 1-1/4” SJ x 1-1/2” SWT (FITS OVER PIPE)
406958 - 1-1/2” SJ x 1-1/2” SWT (FITS OVER PIPE)
406956 - 1-1/4” SJ x 1-1/2” SWT (FITS INSIDE PIPE)
406955 - 1-1/2” SJ x 1-1/2” SWT (FITS INSIDE PIPE)

POLY WASHERS

800095 -1-1/4” POLY BEVELED WASHER
800100 -1-1/2” POLY BEVELED WASHER
800110 -1-1/2” x 1-1/4” POLY BEVELED WASHER
402195 -2” POLY BEVELED WASHER
800105 -1-1/2” FLANGED POLY WASHER
402100 -1-1/2” FLANGED WASHER SOFT RUBBER

PVC P-TRAP

400023 - 1-1/4" TRUE
400225 - 1-1/4" TRAP WITH 1-1/2" BEND
400210 - 1-1/2"

PVC REPAIR TRAP

403334 - 1-1/2" X 1-1/2"

PVC CENTER SINK WASTE OUTLET (UNIVERSAL) 16" CENTERS

401235

PVC J-BEND

407165 - 1-1/4"
407141 - 1-1/2"
404729 - 1-1/2" WITH CAPTURED NUT

PVC HAIR TRAP STRAINER UNIT FOR USE ON HAIR WASHING STATIONS

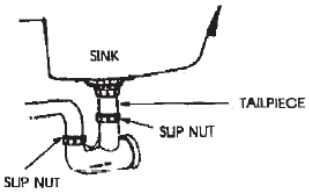

000691-COMPLETE STRAINER TRAP UNIT

PVC TEE WITH TAILPIECE

401485 - 1-1/2" W/4" TAILPIECE

PVC END OUTLET SINK WASTE (UNIVERSAL) TELESCOPIC UP TO 16" CENTERS

406981

WASHING MACHINE TRAP SCHED. 40 PVC

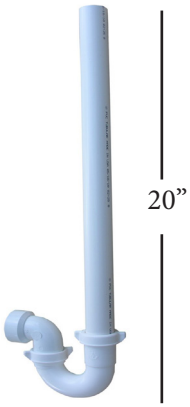

401480 - 1-1/2"

PVC TRAP ADAPTOR

PVC FLANGED TAILPIECE ONE END
400760 - 1-1/2" X 6"
406924 - 1-1/2" X 12"

PVC FLANGED TAILPIECE BOTH ENDS
400765 - 1-1/2" X 16"

8

PVC DISHWASHER BRANCH TAILPIECE S.J. TYPE

400770 - 1-1/2" X 8"
5/8" BRANCH

PVC S.J. EXTENSION TUBE (SJ BOTH ENDS)

400780 - 1-1/2" X 16"

PVC SJ EXTENSION TUBE

407012 - 1-1/2" X 12"
400775 - 1-1/2" X 8"
408775 - 1-1/4" X 6"

PVC FLEX TAILPIECE SLIP JOINT CONNECTION

401502 - 1-1/2" X 12"
401501 - 1-1/4" X 9"

405024 - PVC RUNNING TRAP - 3/4"

405040 - PVC CONDENSATE TRAP - 3/4"

PVC SCHEDULE 40 P-TRAP ALL SWEAT CONNECTIONS

804795 - 1-1/2"
804796 - 2"

PVC SCHEDULE 40 P-TRAP, L-A STYLE HIGH SLIP JOINT INLET WITH UNION NUT AND SWEAT OUTLET

804799 - 1-1/2" X 1-1/4"
804798 - 1-1/2" X 1-1/2"

PVC END OUTLET WASTE 1-1/2" X 16"

405002 - SLIP JOINT
405005 - DIRECT CONNECT

PVC SCHEDULE 40 P-TRAP WITH UNION SWEAT X SWEAT WITH UNION NUT

804797 - 1-1/2"
804800 - 2"

PVC SCHEDULE 40 P-TRAP WITH CLEANOUT

409002 - 1-1/2"

8

MALE CONNECTOR

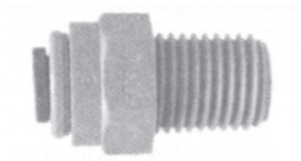

ACS#	TUBE OD	Thread NPTF
20-050P	5/32	1/8
20-046P	5/32	1/4
20-052P	3/16	1/8
20-054P	1/4	1/8
20-055P	1/4	1/4
20-531P	5/16	1/4
20-056P	1/4	3/8
20-532P	5/16	3/8
20-057P	3/8	1/8
20-058P	3/8	1/4
20-059P	3/8	3/8
20-062P	3/8	1/2
20-061P	1/2	3/8
20-063P	1/2	1/2

UNION CONNECTOR

ACS#	TUBE OD	TUBE OD
20-018P	5/32	5/32
20-702P	3/16	3/16
20-019P	1/4	1/4
20-703P	5/16	5/16
20-020P	3/8	3/8
20-021P	1/2	1/2

REDUCING UNION

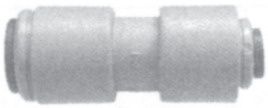

ACS#	Tube OD	Tube OD
20-750P	1/4	3/16
20-751P	5/16	5/32
20-752P	5/16	3/16
20-753P	5/16	1/4
20-754P	3/8	3/16
20-755P	3/8	1/4
20-756P	3/8	5/16
20-757P	1/2	5/16
20-758P	1/2	3/8

UNION ELBOW

ACS#	TUBE OD
20-151P	5/32
20-704P	3/16
20-152P	1/4
20-155P	5/16
20-153P	3/8
20-154P	1/2

FIXED ELBOW

ACS#	TUBE OD	Thread NPTF
20-068P	1/4	1/8
20-069P	1/4	1/4
20-070P	1/4	3/8
20-072P	3/8	1/4
20-073P	3/8	3/8

REDUCING BRANCH TEE

ACS#	TUBE OD ENDS	TUBE OD Branch
20-724P	1/2	3/8
20-725P	3/8	1/4

UNION TEE

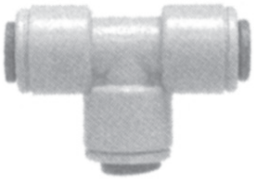

ACS#	TUBE OD
20-026P	5/32
20-027P	3/16
20-028P	1/4
20-031P	5/16
20-029P	3/8
20-030P	1/2

FEMALE CONNECTOR

ACS#	TUBE OD	Thread NPTF
20-993P	1/4	1/8
20-035P	1/4	1/4
20-944P	3/8	1/8
20-036P	3/8	1/4

EXPANSION COUPLINGS

ACS#	IPS	BODY Length
406611	1/2”	5-3/4”
406612	3/4”	6-3/4”
406613	1”	7-3/4”
401715	1-1/2”	10”
406637	2”	10-1/2”

REDUCING ELBOW

ACS#	Tube OD	Tube OD
20-730P	5/16	5/32
20-731P	5/16	3/16
20-732P	5/16	1/4
20-733P	3/8	3/16
20-734P	3/8	1/4
20-735P	3/8	5/16
20-736P	1/2	3/8

CPVC

000403 - 1/2”
000404 - 3/4”
000405 - 3/4” x 1/2”
400311 - 1”

CPVC 90° ELL

000406 - 1/2”
000407 - 3/4”
400312 - 1”

CPVC 90° STREET ELL

000408 - 1/2”
000409 - 3/4”

CPVC 45° CPVC ELL

404536 - 1/2”
404537 - 3/4”

CPVC WING ELBOW

404538 - 1/2”

CPVC 45° ELL

000410 - 1/2”
000411 - 3/4”
400313 - 1”

CPVC END CAP

000421 - 1/2”
000422 - 3/4”
000395 - 1”

CPVC BUSHING

000416 - 3/4 x 1/2”
401601 - 1” x 1/2”
401676 - 1” x 3/4”

CPVC TEE

ACS#	A	B	C
404539	1/2”	1/2”	1/2”
000413	3/4”	3/4”	3/4”
000414	3/4”	1/2”	1/2”
000415	3/4”	3/4”	1/2”
000425	3/4”	1/2”	3/4”
406008	1”	1”	3/4”
000458	1”	1”	1”
000455	1-1/4”	1-1/4”	1-1/4”

CPVC MALE ADAPTOR S x M

000417 - 1/2”
000418 - 3/4”
401600 - 1”

CPVC FEMALE ADAPTOR S x FEM

000419 - 1/2”
000420 - 3/4”

SANITARY TEES SCHD 40 PVC, DWV

407656 - 1-1/2”
408814 - 2”
401282 - 3”
402776 - 3” x 3” x 1-1/2”
403159 - 3” x 3” x 2”

8

REDUCING TEE

402327 - 3/4” x 3/4” x 1/2”
402328 - 3/4” x 1/2” x 3/4”
402329 - 3/4” x 1/2” x 1/2”
402340 - 1” x 1” x 3/4”
402380 - 1/2” x 1/2” x 3/8”

TEE

402301 - 1/2” x 1/2” x 1/2”
402302 - 3/4” x 3/4” x 3/4”
402339 - 1” x 1” x 1”
402379 - 3/8” X 3/8” x 3/8”

STRAIGHT ADAPTOR

402375 - 3/8” x 1/2” FNPT
402376 - 3/8” x 1/2” MNPT
402310 - 1/2” x 1/2” FNPT
402312 - 1/2” x 1/2” MNPT
402311 - 3/4” x 3/4” FNPT
402314 - 3/4” x 3/4” MNPT
402332 - 1” x 1” x FNPT
402333 - 1” x 1” MNPT

ELBOW

402305 - 1/2” x 1/2”
410267 - 1“ x 3/4”
402306 - 3/4” x 3/4”
402307 - 3/4” x 1/2”
402338 - 1” x 1”
402377 - 3/8” x 3/8”

REDUCING COUPLING

402304 - 3/4” x 1/2”
402331 - 1” x 3/4”
402374 - 1/2” x 3/8”

STRAIGHT COUPLING

402300 - 1/2”
402303 - 3/4”
402330 - 1”
402373 - 3/8”

ELBOW DROP EAR

402318 - 1/2” x 1/2” FNPT
402378 - 3/8” x 1/2” FNPT

END STOP

402315 - 1/2”
402317 - 3/4”
402342 - 1”

HY-EAR ELBOW

402346 - 1/2” x 1/2” FNPT

FITTING REDUCERS

402349 - 1/2” X 1”
402353 - 3/4” X 1”

DISCONNECT TONGS

402321 - 1/2”
402322 - 3/4”
402345 - 1”

DISCONNECT CLIPS

402308 - 1/2”
402309 - 3/4”
402343 - 1”

CONTRACTOR KIT

402320 - INCLUDES MOST POPULAR FITTINGS ALONG WITH:
SAFE SEAL TOOL
DISCONNECT TONGS AND CLIP

SAFE SEAL TOOL

402323 - FOR USE WITH 1/2”, 3/4”, AND 1”

REGULATORS

PRV VALVE (ALL BRONZE BODY)

10-70 PSI RANGE AT 45 PSI
MAXIMUM INLET OF 400 PSI

402347 - 1/2”
402348 - 3/4”

BALL VALVES

402324 - 1/2”
402325 - 3/4”
403613 - 1”

COPPER COUPLING C X C W/ STOP 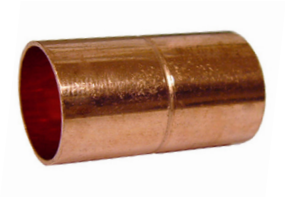 **003051** - 3/8” **401415** - 1/2” **403303** - 5/8” **403302** - 5/8” x 1/2” **401528** - 3/4” **401529** - 3/4” x 1/2” **404004** - 1” **409487** - 1-1/4” **409884** - 1-1/2” **400004** - 2”	COPPER ELBOW-SHORT 90 DEGREE C X C **400317** - 1/8” **400269** - 1/4” **003052** - 3/8” **400224** - 1/2” x 3/8” **401360** - 1/2” **401545**- 3/4” **401553** - 3/4” x 1/2” **400012** - 1” **403354** - 1-1/4” **407998** - 1-1/2” **406011** - 2”	COPPER 90 DEGREE STREET EL FT X C (SHORT ELBOW) **401546** - 1/2” **401547** - 3/4” **404020** - 1” **406452** - 1-1/2”
COPPER ELBOW 90 DEGREE LONG RADIUS C X C **406710** - 1/4” **406711** - 3/8” **406712** - 1/2” **406713** - 5/8” **406714** - 3/4” **406715** - 1”	BRASS FEMALE ELBOW 90 DEGREE C X FPT **401527** - 1/2” X 1/2” **401526** - 1/2” X 3/4” **401525** - 3/4” X 3/4” **400009** - 1/2” X 3/8” **400011** - 3/8” X 1/2” **407148** - 1” X 1”	BRASS MALE ELBOW 90 DEGREE C X MPT **407013** - 1/2” **406999** - 3/4” **407147** - 1”
COPPER DROP EAR ELBOW 90 DEGREE C X C **406709** - 1/2”	BRASS DROP EAR ELBOW 90 DEGREE C X FPT **400003** - 1/2” C X 3/8” FIP **400002** - 1/2” C X 1/2” FIP **407184** - 3/4” C X 3/4” FIP	COPPER UNION SWT X SWT **402925** - 1/2” **402930** - 3/4” **402957** - 1” **402958** - 1-1/4” **402959** - 1-1/2” **402960** - 2”

COPPER TEE C X C X C

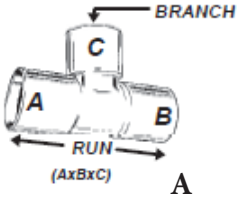

A B C

405557 - 1/4”
003050 - 3/8”
401365 - 1/2”
401551 - 3/4”
401552 - 3/4” X 1/2” X 1/2”
400281 - 3/4” X 1/2” X 3/4”
400208 - 1/2” X 1/2” X 3/4”
400207 - 3/4” X 3/4” X 1/2”
401132 - 1”
403349 - 1-1/4”
403389 - 1-1/2”
403390 - 2”

CAST DRAIN COUPLING C x C

402935 - 1/2”
402940 - 3/4”

45 DEGREE ELBOW C X C

400337 - 1/4”
400338 - 3/8”
401548 - 1/2”
003055 - 5/8”
402063 - 3/4”
402067 - 1”
400285 - 1-1/4”
400339 - 1-1/2”
401136 - 2”

COPPER TUBE CAP

408702 - 3/8”
404201 - 1/2”
400287 - 3/4”
400288 - 1”
400289 - 1-1/2”
403346 - 1-1/4”
402956 - 2”

45 DEGREE STREET ELBOW FTG X C

401549 - 1/2”
403917 - 3/4”
403918 - 1”
403919 - 1-1/4”

COPPER REDUCER FITTING FTG X C

405800 - 3/8” X 1/4”
400051 - 1/2 X 1/4”
400341 - 1/2” X 3/8”
400278 - 5/8” X 1/2”
400342 - 3/4 X 1/2”
003054 - 3/4” X 5/8”
400052 - 1” X 1/2”
400013 - 1 X 3/4”
400053 - 1-1/4” X 3/4”
400014 - 1-1/4” X 1”
400054 - 1-1/2” X 3/4”
400277 - 1-1/2” X 1”
400276 - 1-1/2” X 1-1/4”
400057 - 2” X 3/4”
400056 - 2” X 1”
400055 - 2” X 1-1/4”
400282 - 2” X 1-1/2”

MALE ADAPTER C X MIP

402571 - 3/8” X 3/8”
400343 - 3/8” X 1/2”
401741 - 1/2” X 3/8”
401540 - 1/2” X 1/2”
401530 - 1/2 X 3/4”
400344 - 5/8” X 3/4”
400279 - 3/4” X 1/2”
401541 - 3/4” X 3/4”
401743 - 3/4” X 1”
404681 - 1” X 3/4”
400284 - 1” X 1”
403348 - 1-1/4” X 1-1/4”
401742 - 1-1/2” X 1-1/2”
403665 - 2” X 2”

FEMALE ADAPTER C X FIP

403200 - 3/8” X 3/8”
400331 - 1/2” X 3/8”
400332 - 1/2” X 1/4”
401542 - 1/2” X 1/2”
400333 - 1/2” X 3/4”
400334 - 3/4” X 1/2”
401543 - 3/4” X 3/4”
400336 - 1” X 3/4”
400280 - 1” X 1”
403347 - 1-1/4” X 1-1/4”
400283 - 1-1/2” X 1-1/2”
406487 - 2” X 2”

8

PEX COUPLING BRASS BARB X BARB

*Fits Qestpex Cross-Linked Polythylene tubing
*Fitting contains 3 barbs

400068-3/8”
409811-1/2”
400069-3/4” x 1/2”
409812-3/4”
403911-1”

PEX TEE BRASS BARB X BARB X BARB

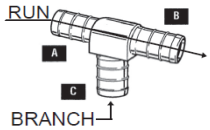

*Fits Qestpex Cross-Linked Polythylene tubing
*Fitting contains 3 barbs

	A	B	C
409813-1/2”			
400070-1/2” x 1/2” x 3/4”			
401406-3/4” x 1/2” x 1/2”			
403196-3/4” x 1/2” x 3/4”			
409814-3/4”			
403197-3/4” x 3/4” X 1/2”			

PEX MALE ADAPTER BRASS BARB X MIP

*Fits Qestpex Cross-Linked Polythylene tubing
*Fitting contains 3 barbs

409816-3/4”
409815-1/2”

PEX FEMALE ADAPTER BRASS BARB X FEMALE SWEAT

*Fits Qestpex Cross-Linked Polythylene tubing
*Fitting contains 3 barbs

400072-1/2”
400073-3/4”

PEX FEMALE ADAPTER BRASS BARB X FIP

*Fits Qestpex Cross-Linked Polythylene tubing
*Fitting contains 3 barbs

409817-1/2”
409818-3/4”

PEX MALE ADAPTER BRASS BARB X MALE SWEAT

*Fits Qestpex Cross-Linked Polythylene tubing
*Fitting contains 3 barbs

409810-1/2”
400071-3/4”

PEX COPPER TEE C X C X C

*Fits Qestpex Cross-Linked Polythylene tubing
*Fitting contains 3 barbs

409819-1/2”
409820-3/4”

PEX CRIMP RINGS BLACK COPPER

400074-3/8”
940146-1/2”
940147-3/4”

*Fits Qestpex Cross-Linked Polythylene tubing

PEX CRIMP RINGS - BRIGHT COPPER FOR POLYBUTYLENE TUBING

940163 - 1/2”
940164 - 3/4”

PEX ADAPTER POLY X PEX

*Fits Qestpex Cross-Linked Polythylene tubing
*Fitting contains 3 barbs

407962 - 1/2”
401562 - 3/4”

8

CHROME PLATED BRASS NIPPLES

407793 3/8” x CLOSE
808016 3/8” x 1-1/2”
407062 3/8” x 2”
808017 3/8” x 2-1/2”
407176 3/8” x 3”
808018 3/8” x 3-1/2”
407061 3/8” x 4”
808019 3/8” x 4-1/2”
407177 3/8” x 5”
808020 3/8” x 5-1/2”
407412 3/8” x 6”
407059 3/8” x 8”

404315 1/2” x CLOSE
404320 1/2” x 1-1/2”
400228 1/2” x 2”
400229 1/2” x 2-1/2”
404325 1/2” x 3”
404330 1/2” x 3-1/2”
404335 1/2” x 4”
404340 1/2” x 4-1/2”
404345 1/2” x 5”
404350 1/2” x 5-1/2”
404355 1/2” x 6”
407902 1/2” x 12”
400498 1/2” x 36”

407086 3/4” x CLOSE
407065 3/4” x 2”
407901 3/4” x 3”
407064 3/4” x 4”
404943 3/4” x 4-1/2”
407063 3/4” x 6”
407293 3/4” x 10”
407294 3/4” x 14”
407292 3/4” x 22”

404711 1” x CLOSE
403051 1” x 2”
403052 1” x 3”
403054 1” x 4”
404670 1” x 4-1/2”
403055 1” x 10”
805160 1-1/4” x 6”
404173 1-1/2” x CLOSE

BRASS NIPPLES

401104 1/8” x CLOSE
401105 1/4” x CLOSE
407169 1/4” x 2”
401004 1/4” x 3”
401106 3/8” x CLOSE
404085 3/8” x 1-1/2”
404090 3/8” x 2”
404095 3/8” x 2-1/2”
404105 3/8” x 3”
404100 3/8” x 3-1/2”
404110 3/8” x 4”
404115 3/8” x 4-1/2”
404120 3/8” x 5”
404125 3/8” x 5-1/2”
404130 3/8” x 6”

401107 1/2” x CLOSE
404140 1/2” x 2”
404145 1/2” x 2-1/2”
404150 1/2” x 3”
404155 1/2” x 3-1/2”
404160 1/2” x 4”
404165 1/2” x 4-1/2”
404170 1/2” x 5”
404175 1/2” x 5-1/2”
404180 1/2” x 6”

404185 3/4” x CLOSE
404190 3/4” x 1-1/2”
404195 3/4” x 2”
404200 3/4” x 2-1/2”
404205 3/4” x 3”
404050 3/4” x 3-1/2”
404055 3/4” x 4”
404060 3/4” x 4-1/2”
404065 3/4” x 5”
404070 3/4” x 5-1/2”
404075 3/4” x 6”

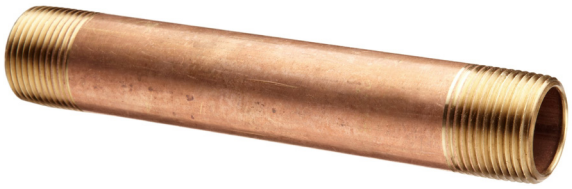

8

CHROME PLATED RISER NIPPLES

801148 - 3/8” x 12”
801668 - 3/8” x 18”
803990 - 3/8” x 24”
400064 - 1/2” x 16”
400059 - 1/2” x 18”
400063 - 1/2” x 32”
400062 - 1/2” x 38”

GALVANIZED STEEL NIPPLES
(Quality Galvanized Steel Nipples in Diameters of 1/8" to 2")

MEETS ASTM A-53 SPECS

401602 1/8" x CLS
401603 1/8" x 1-1/2"
401604 1/8" x 2"
401605 1/8" x 2-1/2"
401606 1/8" x 3"
401607 1/8" x 3-1/2"
401608 1/8" x 4"
401609 1/8" x 5"
401610 1/8" x 6"

401611 1/4" x CLS
401612 1/4" x 1-1/2"
401613 1/4" x 2"
401614 1/4" x 2-1/2"
401615 1/4" x 3"
401616 1/4" x 3-1/2"
401617 1/4" x 4"
401618 1/4" x 5"
401619 1/4" x 6"
401620 1/4" x 8"
401621 1/4" x 10"
401622 1/4" x 12"

401623 3/8" x CLS
401624 3/8" x 1-1/2"
401625 3/8" x 2"
401626 3/8" x 2-1/2"
401627 3/8" x 3"
401628 3/8" x 3-1/2"
401629 3/8" x 4"
401630 3/8" x 4-1/2"
401631 3/8" x 5"
401632 3/8" x 5-1/2"
401633 3/8" x 6"
401634 3/8" x 8"
401635 3/8" x 10"
401636 3/8" x 12"

404510 1/2" x CLS
404509 1/2" x 1-1/2"
404508 1/2" x 2"
404507 1/2" x 2-1/2"
404506 1/2" x 3"
404505 1/2" x 3-1/2"
404504 1/2" x 4"
404503 1/2" x 4-1/2"
404502 1/2" x 5"
404501 1/2" x 5-1/2"
404500 1/2" x 6"
401637 1/2" x 7"
401638 1/2" x 8"
401639 1/2" x 9"
401640 1/2" x 10"
401641 1/2" x 11"
401642 1/2" x 12"

404521 3/4" x CLS"
404520 3/4" x 1-1/2"
404519 3/4" x 2"
404518 3/4" x 2-1/2"
404517 3/4" x 3"
404516 3/4" x 3-1/2"
404515 3/4" x 4"
404514 3/4" x 4-1/2"
404513 3/4" x 5"
404452 3/4" x 5-1/2"
404511 3/4" x 6"
401643 3/4" x 7"
401645 3/4" x 8"
401646 3/4" x 9"
401647 3/4" x 10"
401648 3/4" x 11"
401649 3/4" x 12"

407808 1" x CLS
407809 1" x 2"
407810 1" x 2-1/2"
407811 1" x 3"
401651 1" x 3-1/2"
401652 1" x 4"
401653 1" x 4-1/2"
406317 1" x 5"
401654 1" x 5-1/2"
402609 1" x 6"
401655 1" x 8"
401658 1" x 10"
401659 1" x 12"

402610 1-1/4" x CLS
407812 1-1/4" x 2"
407813 1-1/4" x 2-1/2"
407814 1-1/4" x 3"
401477 1-1/4" x 3-1/2"
401478 1-1/4" x 4"
401479 1-1/4" x 4-1/2"
401481 1-1/4" x 5"
401482 1-1/4" x 5-1/2"
401483 1-1/4" x 6"
403980 1-1/4" x 8"
403981 1-1/4" x 10"
401660 1-1/4" x 12"

401375 1-1/2" x CLS
407815 1-1/2" x 2"
407816 1-1/2" x 2-1/2"
401374 1-1/2" x 3"
401661 1-1/2" x 3-1/2"
401373 1-1/2" x 4"
402054 1-1/2" x 4-1/2"
401372 1-1/2" x 5"
401662 1-1/2" x 5-1/2"
401371 1-1/2" x 6"
401663 1-1/2" x 8"
401664 1-1/2" x 10"
401666 1-1/2" x 12"

400153 2" x CLS
400028 2" x 2-1/2"
400029 2" x 3"
401667 2" x 3-1/2"
402611 2" x 4"
401668 2" x 4-1/2"
401669 2" x 5"
400774 2" x 5-1/2"
402612 2" x 6"
401670 2" x 8"
401671 2" x 10"
401672 2" x 12"

BLACK STEEL NIPPLES
(Quality Black Steel Nipples in Diameters of 1/4" to 2")

MEETS ASTM A-53 SPECS

405117 1/4" x CLS
405118 1/4" x 1-1/2"
405119 1/4" x 2"
405602 1/4" x 2-1/2"
405120 1/4" x 3"
405603 1/4" x 3-1/2"
405121 1/4" x 4"
405122 1/4" x 5"
405123 1/4" x 6"
401620 1/4" x 8"
401621 1/4" x 10"
401622 1/4" x 12"

405124 3/8" x CLS
405125 3/8" x 1-1/2"
405126 3/8" x 2"
405127 3/8" x 3"
405128 3/8" x 4"
405129 3/8" x 4-1/2"
405130 3/8" x 5"
405131 3/8" x 6"
406058 3/8" x 8"
406059 3/8" x 10"
406060 3/8" x 12"

406450 1/2" x CLS
405065 1/2" x 1-1/2"
409449 1/2" x 2"
405068 1/2" x 2-1/2"
409450 1/2" x 3"
405071 1/2" x 3-1/2"
405072 1/2" x 4"
406061 1/2" x 4-1/2"
406497 1/2" x 5"
406099 1/2" x 5-1/2"
008833 1/2" x 6"
406062 1/2" x 7"
406063 1/2" x 8"
406064 1/2" x 9"
406065 1/2" x 10"
406066 1/2" x 12"

406451 3/4" x CLS"
405066 3/4" x 1-1/2"
405069 3/4" x 2"
405070 3/4" x 2-1/2"
406067 3/4" x 3"
406068 3/4" x 3-1/2"
406069 3/4" x 4"
405562 3/4" x 4-1/2"
406498 3/4" x 5"
406070 3/4" x 5-1/2"
406071 3/4" x 6"
406072 3/4" x 8"
406073 3/4" x 9"
406074 3/4" x 10"
406075 3/4" x 12"

405067 1" x CLS
402216 1" x 2"
402217 1" x 2-1/2"
402218 1" x 3"
402219 1" x 3-1/2"
402220 1" x 4"
402221 1" x 4-1/2"
402222 1" x 5"
008831 1" x 5-1/2"
401449 1" x 6"
406076 1" x 8"
406077 1" x 10"
406078 1" x 12"

406079 1-1/4" x CLS
008830 1-1/4" x 2"
405605 1-1/4" x 2-1/2"
406697 1-1/4" x 3"
406080 1-1/4" x 4"
406499 1-1/4" x 5"
406081 1-1/4" x 6"
406082 1-1/4" x 8"
406083 1-1/4" x 10"
406084 1-1/4" x 12"
406085 1-1/2" x CLS
008832 1-1/2" x 2"
406086 1-1/2" x 3"
406087 1-1/2" x 4"
406088 1-1/2" x 5"
406089 1-1/2" x 6"
406090 1-1/2" x 8"

406091 2" x CLS
008834 2" x 2-1/2"
406092 2" x 3"
406093 2" x 4"
405141 2" x 5"
000944 2" x 6"
406094 2" x 8"
406095 2" x 12"

SMALL
BLACK IRON NIPPLES

405595 1/8" x 3/4" CLOSE
403201 1/8" x 1-1/2"
405596 1/8" x 3"
405597 1/8" x 3-1/2"
405598 1/8" x 4"
405599 1/8" x 4-1/2"
405600 1/8" x 5-1/2"
405601 1/8" x 6"

COUPLINGS

Part #	Size	Part #	Size
409900	1/4”	409902	1”
409901	3/8”	409903	1-1/4”
404370	1/2”	409904	1-1/2”
401223	3/4”	409905	2”

REDUCING COUPLINGS

Part #	Size
407034	1/2” x 3/8”
407036	3/4” x 1/2”

UNIONS

Part #	Size	Part #	Size
409906	1/4”	403053	1”
409907	3/8”	409908	1-1/4”
407039	1/2”	409909	1-1/2”
407040	3/4”	409910	2”

45 DEGREE ELBOWS

Part #	Size	Part #	Size
409911	1/4”	409914	1”
409912	3/8”	409915	1-1/4”
407943	1/2”	409916	1-1/2”
409913	3/4”	409917	2”

45 DEGREE STREET ELBOWS

Part #	Size
409918	1/2”

REDUCING TEES

Part #	Size
407027	3/4” x 1/2”
407026	1/2” x 3/8”

90 DEGREE ELBOWS

Part #	Size	Part #	Size
409919	1/4”	403050	1”
404361	3/8”	409920	1-1/4”
404360	1/2”	409921	1-1/2”
401009	3/4”	409922	2”

90 DEGREE REDUCING ELBOWS

Part #	Size
409923	1/2” x 3/8”
409924	3/4” x 1/2”

90 DEGREE STREET ELBOWS

Part #	Size	Part #	Size
409925	1/4”	409929	1”
409926	3/8”	409930	1-1/4”
409927	1/2”	409931	1-1/2”
409928	3/4”	409932	2”

TEES

Part #	Size	Part #	Size
409933	1/4”	409936	1”
409935	3/8”	409937	1-1/4”
404365	1/2”	409938	1-1/2”
407025	3/4”	409939	2”

CAPS

Part #	Size	Part #	Size
409940	1/4”	409943	1”
409942	3/8”	409944	1-1/4”
407037	1/2”	409945	1-1/2”
407038	3/4”	409946	2”

PLUGS

Part #	Size	Part #	Size
409947	1/4”	409949	1”
409948	3/8”	409950	1-1/4”
407032	1/2”	409951	1-1/2”
407033	3/4”	409952	2”

HEX BUSHINGS

Part #	Size
409953	3/8” x 1/4”
407029	1/2” x 3/8”
407030	1/2” x 1/4”
407106	3/4” x 1/2”
409954	1” x 3/4”
409955	1-1/4” x 1”

RED BRASS REDUCER COUPLING - 125 LBS.

*THREADED ENDS COMPLY WITH ANSI B1.20.1

Part #	Size
401090	1/8”
401091	1/4”
401092	3/8”
401093	1/2”
401137	3/4”
401138	1”
401141	1-1/4”
401142	1-1/2”
401143	2”

RED BRASS SOLID PLUG - 125 LBS.

*THREADED ENDS COMPLY WITH ANSI B1.20.1

Part #	Size
401094	1/8”
401095	1/4”
401096	3/8”
401097	1/2”
401098	3/4”
401099	1”
400118	1-1/4”
400119	1-1/2”
400121	2”

RED BRASS SOLID PLUG - 125 LBS.

*THREADED ENDS COMPLY WITH ANSI B1.20.1

Part #	Size
XXXXXX	1/8”
XXXXXX	1/4”
XXXXXX	3/8”
400125	1/2”
400126	3/4”
400127	1”
400128	1-1/4”
400129	1-1/2”
400130	2”

RED BRASS SOLID PLUG - 125 LBS.

*THREADED ENDS COMPLY WITH ANSI B1.20.1

Part #	Size
401100	1/8”
401101	1/4”
401102	3/8”
401103	1/2”
409050	3/4”
400131	1”
400132	1-1/4”
400133	1-1/2”
400134	2”

RED BRASS REDUCER COUPLING - 125 LBS.

*THREADED ENDS COMPLY WITH ANSI B1.20.1

Part #	Size
400179	1/4” x 1/8”
400181	3/8” x 1/8”
400184	3/8” x 1/4”
401116	1/2” x 1/4”
401115	1/2” x 3/8”
400187	3/4” x 3/8”
400188	3/4” x 1/2”
400194	1” x 1/2”
400196	1” x 3/4”
400197	1-1/4” x 3/4”
400199	1-1/4” x 1”
400201	1-1/2” x 1”
400202	1-1/2” x 1-1/4”
400203	2” x 1-1/4”
400204	2” x 1-1/2”

RED BRASS HEX BUSHING - 125 LBS.

*THREADED ENDS COMPLY WITH ANSI B1.20.1

Part #	Size
404017	1/4” x 1/8”
401112	3/8” x 1/8”
400006	3/8” x 1/4”
401088	1/2” x 1/8”
401087	1/2” x 1/4”
401086	1/2” x 3/8”
403505	3/4” x 1/4”
401236	3/4” x 3/8”
401234	3/4” x 1/2”
400209	1“ x 3/8”
400211	1” x 3/4”
400213	1-1/4” x 1”
400231	1-1/2” x 1”
400234	1-1/2” x 1-1/4”
400236	2” x 1-1/4”
400237	2” x 1-1/2”

RED BRASS LOCKNUT - 125 LBS.

Part #	Size
400238	1/2”
400239	1/4”

*THREADED ENDS COMPLY WITH ANSI B1.20.1

8

RED BRASS 90 DEGREE - 125 LBS.

*THREADED ENDS COMPLY WITH ANSI B1.20.1

Part #	Size
401007	1/4”
404735	3/8”
404746	1/2”
404730	3/4”
404731	1”
400117	1-1/4”
404732	1-1/2”
400116	2”

RED BRASS 90 DEGREE STREET ELBOW - 125 LBS.

*THREADED ENDS COMPLY WITH ANSI B1.20.1

Part #	Size
400136	1/8”
400137	1/4”
400138	3/8”
400139	1/2”
400143	3/4”
400144	1”
400146	1-1/4”
409627	1-1/2”
400148	2”

RED BRASS 90 DEGREE REDUCING ELBOW - 125 LBS.

Part #	Size	Part #	Size
404733	3/8” x 1/8”	400164	1” x 3/4”
400147	3/8” x 1/4”	400166	1-1/4” x 3/4”
400156	1/2” x 1/4”	400167	1-1/4” x 1”
400157	1/2” x 3/8”	400168	1-1/2” x 1”
400158	3/8” x 1/4”	400169	1-1/2” x 1-1/4”
400161	3/4” x 1/2”	400170	2” x 1-1/4”
400162	1” x 1/2”	400171	2” x 1-1/2”

*THREADED ENDS COMPLY WITH ANSI B1.20.1

RED BRASS 45 DEGREE ELBOW - 125 LBS.

*THREADED ENDS COMPLY WITH ANSI B1.20.1

Part #	Size
400172	1/8”
400173	1/4”
404745	3/8”
404740	1/2”
404747	3/4”
400174	1”
400176	1-1/4”
400177	1-1/2”
400178	2”

RED BRASS 45 DEGREE STREET ELBOW - 125 LBS.

*THREADED ENDS COMPLY WITH ANSI B1.20.1

Part #	Size
400252	1/8”
400253	1/4”
400254	3/8”
400257	1/2”
400258	3/4”
400259	1”
400262	1-1/4”
400263	1-1/2”
400264	2”

RED BRASS TEE - 125 LBS.

*THREADED ENDS COMPLY WITH ANSI B1.20.1

Part #	Size
400266	1/8”
404018	1/4”
401583	3/8”
404000	1/2”
404749	3/4”
400267	1”
400268	1-1/4”
404022	1-1/2”
200269	2”

RED BRASS REDUCING TEE - 125 LBS.

Part #	Size
400291	3/4” x 1/2”
400292	1” x 3/4”

*THREADED ENDS COMPLY WITH ANSI B1.20.1

RED BRASS CROSS - 125 LBS.

*THREADED ENDS COMPLY WITH ANSI B1.20.1

Part #	Size
400293	1/8”
400294	1/4”
400295	3/8”
400296	1/2”
400297	3/4”
400298	1”
400299	1-1/4”
400301	1-1/2”
400302	2”

RED BRASS COUPLING - 125 LBS.

Part #	Size	Part #	Size
400303	1/8”	404561	1”
400304	1/4”	404562	1-1/4”
404752	3/8”	404563	1-1/2”
404753	1/2”	404564	2”
404754	3/4”		

*THREADED ENDS COMPLY WITH ANSI B1.20.1

8

45 DEGREE BANDED ELBOW - 150 PSI.

Galvanized	Size
405423	3/8”
405424	1/2”
405425	3/4”
405426	1”
405427	1-1/4”
405428	1-1/2”
405429	2”

90 DEGREE BANDED ELBOW - 150 PSI.

Galvanized	Size
405430	1/8”
405431	1/4”
405432	3/8”
405589	1/2”
405590	3/4”
405591	1”
405142	1-1/4”
405146	1-1/2”
402606	2”
405433	1/2” x 3/8”
405434	3/4” x 1/2”
405435	1” x 3/4”

90 DEGREE STREET ELBOW - 150 PSI.

Galvanized	Size
405436	1/8”
405437	1/4”
405438	3/8”
405439	1/2”
405440	3/4”
405441	1”
405442	1-1/4”
405443	1-1/2”
405444	2”

BANDED CAP - 150 PSI

Part #	Size
405462	1/8”
403360	1/4”
401703	3/8”
406001	1/2”
406002	3/4”
401222	1”
406003	1-1/4”
406004	1-1/2”
406005	2”

45 DEGREE STREET ELBOW - 150 PSI

Galvanized	Size
405445	1/2”
405446	3/4”
405447	1”
405448	1-1/4”

BANDED TEE - 150 PSI

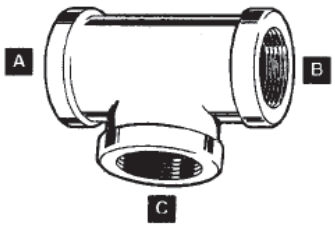

Galvanized	Size
405449	1/8”
405450	1/4”
405451	3/8”
405452	1/2”
405453	3/4”
405454	1”
401944	1-1/4”
401370	1-1/2”
400027	2”
405456	1/2” x 1/2 x 3/4”
405457	3/4” x 3/4 x 1/2”
405458	3/4” x 1/2” x 1/2”
405459	3/4”x 1/2” x 3/4”
405461	1” x 1” x 3/4”
405460	1-1/4” x 1-1/4” x 1”

MERCHANT COUPLINGS - 150 PSI

Galvanized	Size
405463	1/4”
405464	3/8”
405465	1/2”
405466	3/4”
405467	1”
405468	1-1/4”
405469	1-1/2”
405470	2”

BANDED COUPLINGS - 150 PSI

Galvanized	Size
405403	1/8”
405404	1/4”
405405	3/8”
402601	1/2”
402602	3/4”
402603	1”
402604	1-1/4”
407818	1-1/2”
402605	2”
405406	1/4” x 1/8”
405407	3/8” x 1/4”
405408	1/2” x 1/4”
405409	1/2” x 3/8”
405410	3/4” x 3/8”
405411	3/4” x 1/2”
405412	1” x 1/2”
405413	1” x 3/4”
405414	1-1/4” x 3/4”
405415	1-1/4” x 1”
405416	1-1/2” x 3/4”
405417	1-1/2” x 1”
405418	1-1/2” x 1-1/4”
405419	2” x 3/4”
405420	2” x 1”
405421	2” x 1-1/4”
405422	2” x 1-1/2”

BUSHING - 150 PSI

Galvanized	Size
406015	1/4” x 1/8”
403586	3/8 x 1/8”
401211	3/8” x 1/4”
406019	1/2” x 1/8”
406020	1/2” x 1/4”
406006	1/2” x 3/8”
406021	3/4” x 1/8”
406022	3/4” x 1/4”
406023	3/4” x 3/8”
406007	3/4” x 1/2”
406024	1” x 1/4”
406025	1” x 3/8”
406026	1” x 1/2”
406008	1” x 3/4”
406027	1-1/4” x 1/2”
406028	1-1/4” x 3/4”
406029	1-1/4” x 1”
406030	1-1/2” x 1/2”
406031	1-1/2” x 3/4”
406032	1-1/2” x 1”
406033	1-1/2” x 1-1/4”
406034	2” x 3/4”
406035	2” x 1”
406036	2” x 1-1/4”
406037	2” x 1-1/2”

PLUG - 150 PSI

Part #	Size
405462	1/8”
403360	1/4”
401703	3/8”
406001	1/2”
406002	3/4”
401222	1”
406003	1-1/4”
406004	1-1/2”
406005	2”

UNION (BRASS TO IRON SEAT) - 150 PSI

Galvanized	Size
406041	1/4”
406042	3/8”
406043	1/2”
406044	3/4”
406045	1”
406046	1-1/4”
406047	1-1/2”
401405	2”

FLOOR FLANGE - 150 PSI

Galvanized	Size
406041	1/4”
406042	3/8”
406043	1/2”
406044	3/4”
406045	1”
406046	1-1/4”
406047	1-1/2”
401405	2”

BANDED CROSS - 150 PSI

Galvanized	Size
406054	1/4”
406055	1/2”
406056	3/4”
406057	1”

LOCKNUT - 150 PSI

Galvanized	Size
401193	1/2”

90 DEGREE BANDED ELBOW - 150 PSI

Black	Size
405593	1/8”
405132	1/4”
405133	3/8”
406009	1/2”
406010	3/4”
408864	1”
407600	1-1/4”
407601	1-1/2”
407602	2”
407603	1/2” x 3/8”
407604	3/4” x 1/2”
407605	1” x 1/2”
407606	1” x 3/4”
407607	1-1/4” x 1”

45 DEGREE BANDED ELBOW - 150 PSI

Black	Size
407631	1/4”
407632	3/8”
407633	1/2”
407634	3/4”
407635	1”
407636	1-1/4”

90 DEGREE STREET ELBOW BANDED - 150 PSI

Black	Size
407637	1/4”
4076328	3/8”
407640	1/2”
407641	3/4”
407642	1”
008828	1-1/4”
407643	2”

45 DEGREE STREET ELBOW - 150 PSI

Black	Size
407633	1/2”
407634	3/4”
407635	1”

TEE BANDED - 150 PSI

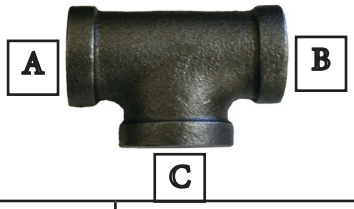

Black	Size
405137	1/4”
405138	3/8”
408858	1/2”
408859	3/4”
408860	1”
407608	1-1/4”
407609	1-1/2”
407610	2”
407611	1/2” x 1/2” x 3/8”
407612	3/4” x 1/2” x 1/2”
407613	3/4” x 1/2” x 3/4”
407614	3/4” x 3/4” x 1/2”
407615	1” x 1” x 1/2”
407616	1” x 1” x 3/4”
407617	1-1/4” x 1-1/4” x 1”
407618	1” x 1/2” x 1/2”
407619	1” x 1/2” x 1”
407620	1” x 3/4” x 1/2”
407621	1” x 3/4” x 3/4”
407622	1” x 3/4” x 1”
407623	1-1/4” x 1-1/4” x 3/4”

CAP BANDED - 150 PSI

Black	Size
405052	1/4”
405054	3/8”
409451	1/2”
405056	3/4”
405057	1”
405058	1-1/4”
406127	1-1/2”
406128	2”

COUPLING, BANDED - 150 PSI

Black	Size
405136	3/8”
405135	1/4”
408861	1/2”
408862	3/4”
408863	1”
406129	1-1/4”
407820	1-1/2”
406130	2”
403203	1/4” x 1/8”
405139	3/8” x 1/4”
406131	1/2” x 1/4”
405140	1/2” x 3/8”
406132	3/4” x 1/2”
406133	1” x 1/2”
406134	1” x 3/4”
406135	1-1/4” x 3/4”
406098	1-1/4” x 1”
406096	1-1/2” x 1-1/4”

MERCHANT COUPLINGS - 150 PSI

Black	Size
405059	1/4”
406136	3/8”
405060	1/2”
008837	3/4”
406137	1”
406138	1-1/4”
406139	1-1/2”
406140	2”

FLOOR FLANGE - 150 PSI

Black	Size
405052	1/4”
405054	3/8”
409451	1/2”
405056	3/4”
405057	1”
405058	1-1/4”

BUSHING - 150 PSI

Black	Size
405594	1/4” x 1/8”
405063	3/8” x 1/4”
402579	1/2” x 1/4”
407821	1/2” x 3/8”
008836	3/4” x 1/4”
407624	3/4” x 3/8”
008835	3/4” x 1/2”
409974	1” x 1/2”
405064	1” x 3/4”
407625	1-1/4” x 3/4”
407822	1-1/4” x 1”
407626	1-1/2” x 1-1/4”
407627	1-1/2” x 3/4”
407628	1-1/2” x 1”
407629	2” x 1-1/4”
407630	2” x 1-1/2”

90 DEGREE BANDED ELBOW - 150 PSI

Black	Size
406141	1/8”
405051	1/4”
405053	3/8”
409452	1/2”
405055	3/4”
406142	1”
406143	1-1/4”
402607	1-1/2”
402608	2”

UNION, BRASS TO IRON SEAT - 150 PSI

Black	Size
405075	1/8”
406392	1/4”
401013	1/2”
408865	3/4”
408866	1”
405061	1-1/4”
405062	1-1/2”
406144	2”

PVC THREADED UNION (FIP X FIP)
SCHEDULE 40, WHITE

Part #	Size
405666	1/2”
405667	3/4”
405668	1”
405669	1-1/4”
400025	1-1/2”
405670	2”

PVC SOLVENT (SWEAT) UNION
SCHEDULE 40, WHITE

Part #	Size
405671	1/2”
405672	3/4”
407083	1”
405673	1-1/4”
407081	1-1/2”
407082	2”

COPPER UNION (SWT X SWT)

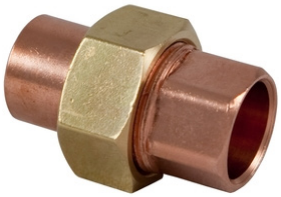

Part #	Size
406185	1/4”
402925	1/2”
402930	3/4”
402957	1”
402958	1-1/4”
402959	1-1/2”
402960	2”

UNION, SCREWED BRASS FIP X FIP

Part #	Size
401100	1/8”
401101	1/4”
401102	3/8”
401103	1/2”
409050	3/4”
400131	1”

DIELECTRIC UNION

Part #	Size
407046	1/2” FIP x 1/2” SWT
406899	3/4” FIP X 3/4” SWT
407554	3/4” FIP X 1/2” SWT

GALVANIZED COMPRESSION COUPLINGS

*LONG PATTERN
*HYDROFORMED STEEL BODY
*MALLEABLE IRON NUTS
*RUBBER GASKETS
*RATED 125 PSI AT UP TO 210 DEG F
*IRON PIPE SIZE FOR PIPING OR REPAIRS ON GALVANIZED PIPE
*PIPE MUST BE RESTRAINED AFTER INSTALLATION

Part #	Size
406984	FOR 1/2” IRON PIPE, 4-1/2” LONG
406985	FOR 3/4” IRON PIPE, 4-3/8” LONG
406986	FOR 1” IRON PIPE, 4-5/8” LONG
406987	FOR 1-1/4” IRON PIPE, 4-3/4” LONG
406988	FOR 1-1/2” IRON PIPE, 5-1/8” LONG
407020	FOR 2” IRON PIPE, 4-1/2” LONG

BRONZE COMPRESSION COUPLING

NOTE: All couplings 1-1/4” & smaller will repair Black Iron Pipe, Galvanized Pipe & PVC Pipe (As they all have the same O.D.) or a different O.D. size for Copper Pipe.

*BRASS BODY AND BRASS NUTS
*RUBBER GASKETS
*RATED 125 PSI AT UP TO 210 DEG F
*FOR USE IN PIPING OR REPAIR OF GALVANIZED OR COPPER PIPE
*PIPE MUST BE RESTRAINED AFTER INSTALLATION

Part #	Size
406888	3/8” IRON PIPE AND 1/2” COPPER, 4-1/2” LONG
401347	1/2” IRON PIPE AND 3/4” COPPER, 4-5/8” LONG
401348	3/4" IRON PIPE AND 1" COPPER, 5" LONG
406967	1” IRON PIPE AND 1-1/4” COPPER, 4-3/4” LONG
406968	1-1/4” IRON PIPE AND 1-1/2” COPPER, 4-7/8” LONG
406970	1-1/2” IRON PIPE, 5-1/8” LONG
406969	2” COPPER, 4-5/8” LONG

WHITE PVC COMPRESSION COUPLING

NOTE: All couplings 1-1/4” & smaller will repair Black Iron Pipe, Galvanized Pipe & PVC Pipe (As they all have the same O.D.) or a different O.D. size for Copper Pipe.

*PVC BODY AND NUTS
*RUBBER GASKETS
*RATED 150 PSI AT 73 DEG F
*IRON PIPE SIZE FOR USE IN PIPING OR REPAIRS ON GALVANIZED OR PLASTIC PIPE
*PIPE MUST BE RESTRAINED AFTER INSTALLATION

Part #	Size
401340	1/2” IRON PIPE SIZE AND 3/4” COPPER, 5” LONG
401345	3/4” IRON PIPE SIZE AND 1” COPPER, 5-1/4” LONG
401346	1” IRON PIPE & 1-1/4” COPPER, 5-7/8” LONG
407194	1-1/4” IRON PIPE & 1-1/2” COPPER, 6-3/8” LONG
407195	1-1/2” IRON PIPE, 6-7/8” LONG
401027	2” IRON PIPE SIZE, 7-1/2” LONG
407196	2-1/2” IRON PIPE, 9-5/8” LONG
401036	3" IRON PIPE, 10-3/4" LONG
407198	4” IRON PIPE, 11” LONG

PVC BALL VALVE-SLIP X SLIP
180 PSI AT 72 DEGREES, COLD WATER ONLY

400620	1/2”
400625	3/4”
400630	1”

400699	1-1/4”
400667	1-1/2”
400666	2”

PVC BALL VALVE-FIP X FIP
180 PSI AT 72 DEGREES, COLD WATER ONLY

400605	1/2”
400610	3/4”
400615	1”

400671	1-1/4”
400672	1-1/2”
400673	2”

PVC GATE VALVE-FIP X FIP

400670	1/2”
400675	3/4”
400670	1”

PVC GATE VALVE-SLIP X SLIP

400685	1/2”
400660	3/4”
400665	1”

FULL PORT CPVC BALL VALVE
SLIP X SLIP

401019	1/2”
000886	3/4”

PVC SPRING CHECK VALVE-SLIP X SLIP
150 PSI

400906	1/2”
400905	3/4”
400674	1”
400677	1-1/4”
404782	1-1/2”
404784	2”

PVC SPRING CHECK VALVE-FIP X FIP
150 PSI

400678	1/2”
400679	3/4”
400680	1”
400681	1-1/4”
400682	1-1/2”
404785	2”

FULL PORT BALL VALVES (REGULAR PATTERN FORGED BRASS)
FIP X FIP, 150 WSP, 600 W.O.G. NON SHOCK

400543	1/2”
400544	3/4”
400546	1”
400547	1-1/2”
400548	2”

FULL PORT BALL VALVES (REGULAR PATTERN FORGED BRASS)
SWEAT x SWEAT, 150 WSP, 600 W.O.G. NON SHOCK

400553	1/2”
400554	3/4”
400556	1”
400557	1-1/2”
400558	2”

STANDARD PORT BALL VALVES (FORGED BRASS)
FIP X FIP, 400 W.O.G. 125 W.S.P.

400531	1/2”
400532	3/4”
400533	1”
400534	1-1/2”
400536	2” - 150 w.s.p.

STANDARD PORT BALL VALVES (FORGED BRASS)
SWEAT X SWEAT, 400 W.O.G. 125 W.S.P.

400537	1/2”- 150 w.s.p.
400538	3/4”- 150 w.s.p.
400539	1”
400541	1-1/2”
400542	2”

STANDARD PORT BALL VALVES (FORGED BRASS)
COMPRESSION x COMPRESSSION, 400 W.O.G. 125 W.S.P.

400559	1/2”
400561	3/4”
400562	1”

ECONOMY GATE VALVES - SWEAT, 125 W.S.P. , 200 W.O.G. HEAVY PATTERN BRASS

407126	3/8”
400635	1/2”
400640	3/4”
401018	1”
406209	1-1/4”
409540	1-1/2”
406716	2”

ECONOMY GATE VALVES - FIP, 125 W.S.P. , 200 W.O.G. HEAVY PATTERN BRASS

407936	3/8”
404375	1/2”
400645	3/4”
407894	1”
008248	1-1/4”
008253	1-1/2”
406211	2”

HAMMOND GATE VALVES
SWEAT, 125 WSP, 200 W.O.G. HEAVY PATTERN BRASS

406203	1/2”
406204	3/4”
406205	1”
406206	1-1/4”
406207	1-1/2”
406208	2”

HAMMOND GATE VALVES
FIP, 125 WSP, 200 W.O.G. HEAVY PATTERN BRASS

406200	1/2”
409672	3/4”
408991	1”
406201	1-1/4”
406202	1-1/2”
400805	2”

ECONOMY GATE VALVES
WITH COMPRESSION CONNECTIONS, 125 W.S.P. , 200 W.O.G

407186	1/2”
407187	3/4”

COMPRESSION (GLOBE) STOP VALVES

402051	1/2”	**FIP, Central Brass**
404373	3/4”	**FIP, Economy**
409941	1”	**Sweat, NIBCO**

COMPRESSION (GLOBE) STOP VALVES
WITH COMPRESSION CONNECTION

406961	1/2”	**Economy**
406962	3/4”	**Economy**

APOLLO 32-100 SERIES
REGULAR PORT THREADED BRONZE BALL VALVE

The Apollo 32-100 Series is an economy NPT threaded Regular Port Bronze Ball Valve featuring a proven ASTM grade cast bronze body for durability and superior corrosion resistance.

FEATURES

*ADJUSTABLE PACKING GLAND
*BLOW-OUT PROOF STEM DESIGN
***PTFE** SEATS AND **MPTFE** STUFFING BOX RING
*CHROMIUM PLATED BALL
*100% FACTORY TESTED

PERFORMANCE RATING

*MAXIMUM PRESSURE: 400psi CPW, 125psi SWP
*MAXIMUM TEMPERATURE: 400˚ F
*VACUUM SERVICE TO 29" Hg

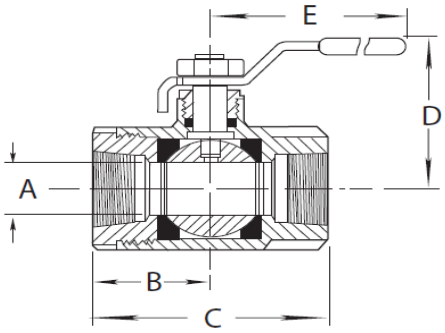

PART #	SIZE	DIMENSIONS				
		A	B	C	D	E
402099	1/4"	0.37	0.08	1.60	1.65	2.87
403139	3/8"	0.37	0.80	1.60	1.65	2.87
403137	1/2"	0.40	1.00	2.00	1.68	2.87
403138	3/4"	0.65	1.20	2.41	1.90	3.87
407283	1"	0.75	1.55	3.09	2.18	4.87
407282	1-1/4"	1.00	1.72	3.44	2.53	5.50
407281	1-1/2"	1.12	1.93	3.87	2.69	5.50
407280	2"	1.50	2.17	4.37	2.94	5.50

STANDARD MATERIALS LIST

PART NAME	MATERIAL
LEVER and GRIP	STEEL, ZINC PLATED WITH VINYL
STEM PACKING	RPTFE
BALL	B16, CHROME PLATED
SEAT	PTFE
RETAINER	B16
GLAND NUT	B16
STEM	B16
LEVER SCREW (1/4" to 1/2")	STEEL, ZINC PLATED
LEVER NUT (3/4" to 2")	STEEL, ZINC PLATED
BODY	B584-C84400

BRONZE SWING CHECK VALVE - 'Y' PATTERN

*150 PSI NPS STEM
*300 PSI NON-SHOCK WCG
*HEAVY CONSTURCTION
*SWING TYPE DISC WITH INTEGRAL SEAL
*TEFLON FACE ON DISC FOR POSITIVE SEAL
*CAN BE INSTALLED VERTICALLY OR HORIZONTALLY
*THREADED ENDS COMPLY WITH ANSI 01.24.1
*SOLDER ENDS COMPLY WITH ANSI 516.1B

THREADED

Part #	Size
409800	1/2"
409801	3/4"
409802	1"
409803	1-1/4"
409804	1-1/2"
409805	2"

SOLDER

Part #	Size
403219	1/2"
409833	3/4"
409834	1"
409704	1-1/4"
409705	1-1/2"
409706	2"

ADD-A-VALVE

DESIGNED FOR SHUTTING DOWN **COPPER PIPING**, UNDER PRESSURE, WITHOUT HAVING TO SHUT DOWN THE ENTIRE BUILDING. (INCLUDES ADD-A-VALVE, BALL VALVE AND INSTALLATION INSTRUCTIONS)

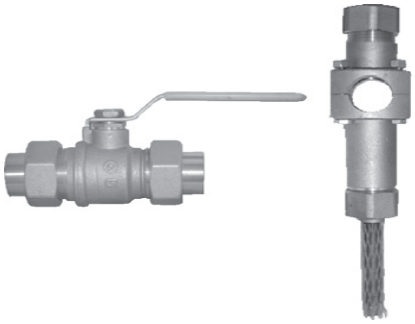

Part #	Size
808064	1/2"
808063	3/4"
808065	1"
808066	1-1/4"
808067	1-1/2"
806443	2"

BRASS SWING CHECK VALVE

*150 PSI NON-SHOCK WOG
*THREADED ENDS COMPLY WITH ANSI B1.20.1
*SOLDER ENDS COMPLY WITH ANSI 516.1B

THREADED

Part #	Size
409700	1/4"
408242	3/8"
407188	1/2"
407129	3/4"
407189	1"
407190	1-1/4"
407191	1-1/2"
407192	2"
409701	2-1/2"
409702	3"
409703	4"

SOLDER

Part #	Size
407201	1/2"
407202	3/4"
407204	1"
407771	1-1/4"
000769	1-1/2"
405508	2"

SHARKBITE SPRING CHECK VALVE

400452	1/2"
400453	3/4"
400454	1"

SPRING CHECK VALVE

304406 - 3/8" THREADED BRASS, WATTS

407681 - 1/2" THREADED BRASS, B&K

401443 - 3/4 THREADED BRASS, B&K

304462 - 1" THREADED BRASS, WATTS

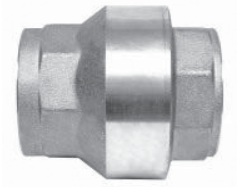

308862 - 4" THREADED BRASS, WILKINS

COPPER TUBING

TYPE L - HARD
002041 - 1/2" x 10ft
402558 - 1/2" x 20ft
002042 - 3/4" x 10ft
402557 - 3/4" x 20ft

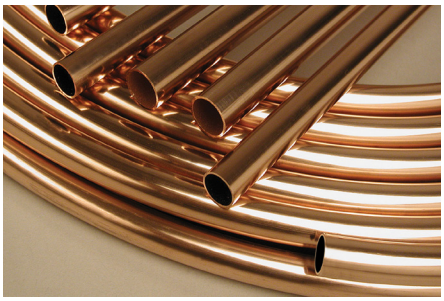

TYPE L - SOFT
003093 - 1/2", 60ft/BOX
003092 - 3/4", 60ft/BOX

REFRIGERATION
405100 - 1/4" O.D., 50ft/BOX

CPVC PIPE (FLOWGUARD GOLD)
HOT OR COLD WATER LINES
MEETS ASTM D 2846 SPECIFICATIONS
(10ft LENGTHS)

000423 - 1/2"
000424 - 3/4"

SEMI-RIGID POLYURETHANE COLORED TUBING
FOR PRISON FIXTURES AND DRINKING FOUNTAIN REPAIRS
COMES IN 100ft ROLLS

402002 - 1/8" RED
402003 - 1/8" BLUE
402006 - 1/8" CLEAR
402007 - 1/4" BLACK
402008 - 1/4" CLEAR
402036 - 3/8" BLUE

SNAP/QUICK RELEASE CONNECTORS

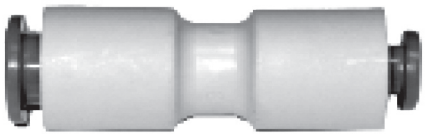

402010 - 1/4" STRAIGHT UNION COUPLING
402009 - 1/8" STRAIGHT UNION/COUPLING
402014 - 1/4" x 3/8" REDUCING UNION/COUPLING

PIPE INSULATION

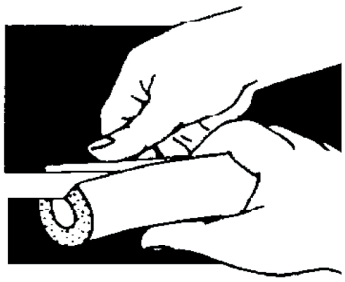

000554 - 7/8" O.D. FOR 3/4" CTS, 1" WALL (108FT/CASE)
000553 - 5/7" O.D. COR 1/2" CTS, 1" WALL (144ft/CASE)
002040 - 5/8" O.D. FOR 1/2" CTS, 1/2" WALL (240ft/CASE)

HOLDRITE BRACKET

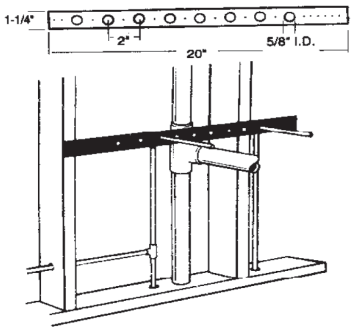

***COPPER PLATED FOR 1/2" NOMINAL SWEAT**
***1/2" NOMINAL HOLES FOR COPPER SWEAT**

000993- 1-1/4" - 20"

HOLDRITE BRACKET

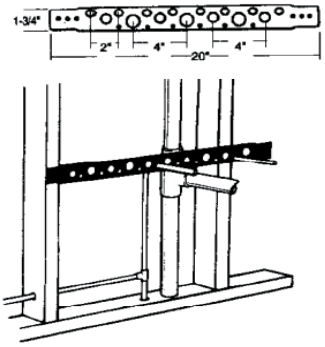

***COPPER PLATED FOR 1/2", 3/4" AND 1" COPPER SWEAT**

004018- 1-3/4" x 20"

8

3” CLAMP SIZE - SINGLE BOLT

Part #	Clamp Size
200362	3/8” x 3”
200366	1/2” x 3”
200367	3/4” x 3”
200582	1” x 3”
200584	1-1/4” x 3”
200586	1-1/2” x 3”
200588	2” x 3”
200305	2-1/2” x 3”
200310	3” x 3”
200320	4” x 3”

FOR IRON AND GALVANIZED PIPE

6” CLAMP SIZE - TWO BOLT FOR IRON AND GALVANIZED PIPE

Part #	Clamp Size
200580	1/2” x 6”
200581*	3/4” x 6”
200583	1” x 6”
200585	1-1/4” x 6”
200587	1-1/2” x 6”
200589	2” x 6”
200355	2-1/2” x 6”
200360	3” x 6”
200365	4” x 6”

***CAN BE USED ON COPPER PIPE**

-PROVIDES POSITIVE SEAL ON LEAKING PIPES
-NO LOOSE PARTS
-TYPE 304 STAINLESS STEEL
-NEOPRENE GASKET
-ROLLED EDGES
-MALLEABLE IRON LUGS

PIPE REPAIR KIT

FOR USE ON:
-COPPER PIPE
-STEEL PIPE
-PVC PIPE
-CAST IRON
-RUBBER HOSE

PERMANENTLY REPAIR ANY PIPE OR HOSE IN MINUTES
REPAIRS DWV AND PRESSURIZED PIPES
WHEN PROPERLY APPLIED, WILL WITHSTAND
UP TO 180 PSI AND 600 DEGREES FAHRENHEIT
APPLIES LIKE TAPE AND SETS LIKE STEEL - EVEN IN WATER

200147 - 2” x 60” ROLL - FOR USE ON PIPE UP TO 1” IN DIAMETER
200148 - 3” x 120” ROLL - FOR USE ON PIPE OVER 1” IN DIAMETER

HANGER STRAPS

003090 - PVC, 100 FT. ROLL
003089 - GALVANIZED 20 GA. 10 FT. ROLL
003091 - COPPER CLAD - 3/4" x 100 FT. ROLL

SOLID COPPER STRAPS FOR COPPER PIPE

405007 - 1/2" (5/8" O.D.)
405008 - 3/4" (7/8" O.D.)

GALVANIZED STRAPS FOR IRON AND PVC PIPES

404176 - 1/2"
404177 - 3/4"

DWV HANGER STRAP

403921 - 1-1/2" X 12" 18 GA.
403922 - 2" X 12" 18 GA.
403923 - 3" X 12" 16 GA.
403924 - 4" X 12" 16 GA

WIRE PIPE HANGERS (VINYL COATED)

002404 - 1/2 X 6"
002405 - 3/4" X 6"

DWV J-HOOKS (10/PACK)

003096 - 1/2"
003097 - 3/4"

J-TUBE NAILER COPPER PLATED

402239 - 1/2" OR 3/4"

HALF CLAMPS (PLASTIC)

403021 - 1/2"
403001 - 3/4"
403002 - 1"

FULL PIPE CLAMP (PVC)

403003 - 1/2"
403004 - 3/4"

SECTION NINE
HARDWARE:
TOILET PARTITION HARDWARE, FASTENERS, DOOR HARDWARE, WINDOW SCREENS & HARDWARE DRAPERY PARTS, ECT.

WALL ANCHOR (BANTAM) KIT

949006

940462 -(100) 8-10 BANTAM ANCHORS, (100) #8 X 1" SCREWS - (1) 3/16" CARBIDE DRILL BIT
949007 -(100) 10-12 BANTAM ANCHORS, 100 #10 X 1" SCREWS - (1) 1/4" CARBIDE DRILL BIT

WALL ANCHORS, PLASTIC, CONICAL (SOLD IN BAGS OF 100)

948003 - #6/#8 3/4" (USE WITH 940109 SCREW)
948004 - #8/#10 7/8" (USE WITH 940108 SCREW)
948005 - #10/#12 1" USE WITH 940106 SCREW)
948006 - #14/#16 1-3/8" (USE WITH 940107 SCREW)

TOGGLE BOLT WITH MUSHROOM HEAD SOLD 50/BOX

949011 - 1/8" X 3"
949010 - 1/8" X 2"
949014 - 1/4" X 3"
949015 - 1/4" X 4"
949012 - 3/16" X 3"
949013 - 1/4" X 3"

ZIP IT ANCHOR (NYLON)

949023 - ZIP IT KIT JUNIOR. INCLUDES (50) SMALL PVC ANCHORS, (50) #6 X 1" SCREWS AND DRILL BIT
949005 - ZIP IT KIT(STANDARD SIZE). INCLUDES (50) ANCHORS, (50) #8 X 1" SCREWS AND DRILL BIT.
949022 - ZINC ZIP IT KIT (STANDARD SIZE) INCLUDES (50) #8 X 1"SCREWS & ANCHORS WITH DRILL BIT.
949004 - ZIP IT ANCHORS ONLY (LARGER SIZE) 100/BOX

HOLLOW WALL ANCHOR FOR #6/#8 SCREW

949009 - ANCHOR ONLY (BOX OF 100)
949008 - ANCHOR KIT W/SCREWS, INCLUDES (50) ANCHORS AND (50) SCREWS

POLY TOGGLE SCREW ANCHOR (BOX OF 100 W/SCREWS)

949001 - 3/8"-1/2" WALL
949002 - 1/2"
949003 - 5/8"-3/4" WALL

PHILLIPS PAN HEAD SHEET METAL SCREWS BRIGHT ZINC PLATING

940109 - #6 X 3/4"
940108 - #8 X 1"
940106 - #10 X 1-1/4
940107 - #14 X 1-1/2"

MAGNET CATCH FOR BI-FOLD GLASS MIRROR DOORS IN NEW MOTELS/HOTELS (BROWN)

943003

9

DOOR STOP-RIGID TYPE

940071 - IVES (3") BRASS COLOR
940072 - IVES (3") ALUMINUM
940056 - GENERIC (3") BRASS COLOR
940091 - IVES (3-3/4") ALUMINUM

DOOR STOP-SPRING TYPE GENERIC)

940825

RUBBER DOOR STOP TIP ONLY

940055 - FITS IVES

CHAIN DOOR GUARD

940060 - POLISHED BRASS
940610 - NICKEL FINISH
940578 - BRIGHT CRHOME FINISH W/7" CHAIN

DOOR FRAME MAGNET FOR DOOR CHAIN-SCREW OR SILICONE MOUNT

BOTTOM SIDE PICTURED

TOP SIDE IS DULL CHROME FINISH

940065 - 1-3/16" DIAMETER

IVES SURFACE AND SLIDE BOLT PACKED WITH ALL 3 STRIKES

940605 - DARK BRONZE/ BROWN FINISH

SECURITY DOOR GUARDS

940351 - BRIGHT BRASS
940826 - BRUSHED CHROME
940829 - ANTIQUE BRASS
940835 - POLISHED CHROME

WALL MOUNT DOOR STOP
SATIN FINISH WITH MOUNTING HARDWARE
(3-5/8" FROM WALL TO END OF STOP

946007

SECURITY DOOR GUARDS

942006 - ANTIQUE BRONZE (LIGHT)
940830 - ANTIQUE BRONZE (DARK)

DOOR VIEWER
ADJUSTABLE FROM 1 15/16 TO 2 1/4
1/2" BORE SIZE. 160 DEGREE FIELD OF VISION.

940759 - CHROME
940758 - BRASS

9

948013 - SATIN ALUMINUM, CONCEALED MOUNT, 2-3/8" OD

940656 - BRIGHT BRASS, CONCEALED MOUNT, 2-3/8" OD
940655 - BIRGHT BRASS, CONCEALED MOUNT, 1-7/8" OD

940057 - WHITE, ADHESIVE MOUNT, 1-7/8" OD
940058 - GREY, ADHESIVE MOUNT, 1-7/8" OD

940139 - ANTIQUE BRASS, SCREW MOUNT, 2-3/8" OD

WALL GUARD, ROUND, WHITE, MOUNTS TO WALL WITH ADHESIVE BACKING

948007 - 3-1/4" DIAMETER
803135 - 5" DIAMETER

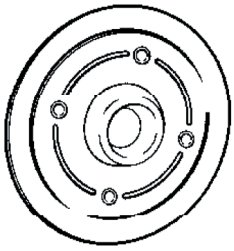

DOOR WALL GUARD, RAISED TYPE, WHITE, MOUNTS TO WALL WITH ADHESIVE BACKING

402945

HEAVY CORNER GUARDS FOR SECURITY LATCHES

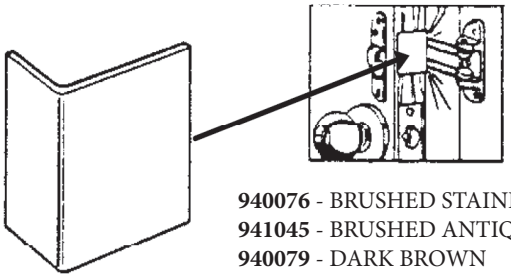

940076 - BRUSHED STAINLESS
941045 - BRUSHED ANTIQUE BRASS
940079 - DARK BROWN

STOP BUMPER, SQUARE STICK-ON, BEIGE 3/4" SQUARE

940015

CLEAR LEXAN STICK-ON LATCH STOP 1/8" THICK

941034

HEAVY DUTY KICK STOP

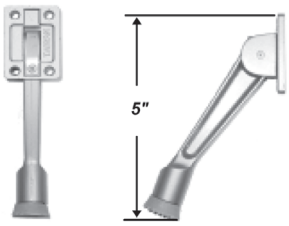

406879 - BRASS FINISH

ADJUSTABLE DOOR STOP WITH 5 SETTINGS

940112 - BRUSHED CHROME

HINGE PIN DOOR STOP

940510 - BRASS FINISH (GENERIC)

KICK STOP LIGHT DUTY 3 SCREW MOUNT

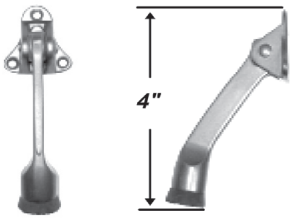

940726 - BROWN FINISH
940725 - POLISHED BRASS FINISH
940727 - BRUSHED CHROME FINISH
940778 - DARK BRONZE FINISH

DOOR SILENCER (IVES) GRAY COLOR

940075 - 100 PER BOX

SMALL CONCEALED MOUNT DOOR STOPS - 1" O.D., 1/2" HEIGHT

940662 - BRUSHED CHROME
940779 - BRUSHED ANTIQUE BRASS

ANGLE DOOR STOP, SCREW ON TYPE - BRASS FINISH

940761

METAL MIRROR CLIP SET WITH SCREWS

000775

CLEAR PVC MIRROR CLIP

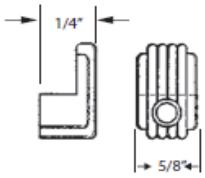

940827

CLIP AND CONNECTOR KIT

940495

DRAPERY BATONS
(FIBERGLASS)

940096-3' WHITE
940650-5' WHITE

LOCK SLIDE

CAN BE USED ALONG ROD AS NEEDED TO PROVIDE A STOP FOR SLIDES

000750

WHEEL MASTER
CARRIER RIGHT HAND

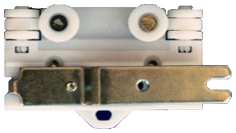

940029

BALL BEARING CARRIER

940097

SHOULDER SCREW

940095

PIN-ON HOOK

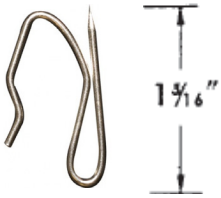

940733

END STOP COMPLETE (WITH FRICTION CARRIER)
GRAY PLASTIC

DIMENSIONS OF END CAP
940031- 3/4" X 1"
940011- 3/4" X 13/16"

BATON ADAPTER

940415

MOLDED CARRIER
(FITS ALL STRING
DRAW RODS)

940420

TENSION PULLEY
HEAVY DUTY

940410

WALL MOUNT BRACKET
NO FINISH, ZINC PLATED

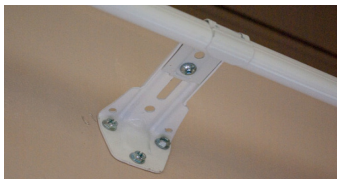

006000

END STOP WITH SCREW

940099

CURTAIN ROLLER WITH HOOK

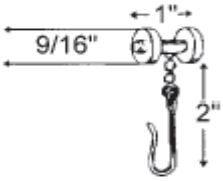

WORKS WITH CREST, ALPINE, CAPITAL, GRANT, STANDARD TRACK, BELTOR, CAPITAL, NELSON AND STANLEY CURTAIN TRACK SYSTEMS

948012

ALL BEARING SLIDE GRABBER
WHITE PLASTIC

940098

CHARLEY-BAR SAFETY LOCK
ANODIZED ALUMINUM TUBING COMPLETE WITH ALL PARTS
MAKES SLIDING GLASS DOORS JIMMY PROOF

940612-END BRACKET

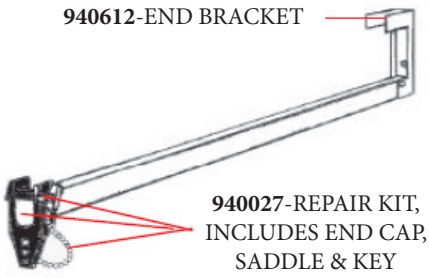

940027-REPAIR KIT, INCLUDES END CAP, SADDLE & KEY

940832-COMPLETE BAR UNIT(ADJUSTS 30-48")

DRAPERY CORD (600 FT.)
#4 NYLON SOLID BRAIDED

940757

SINGLE WINDOW LOCK

001894

9

ACS WINDOW SCREENS AND COMPONENT PARTS

MESH TYPES

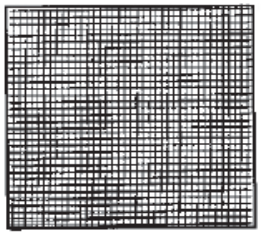

CHARCOAL FIBERGLASS

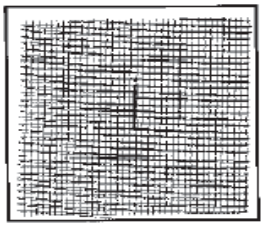

CHARCOAL ALUMINUM

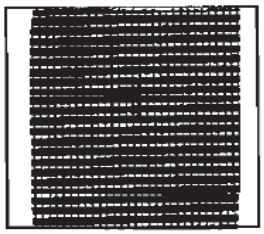

CHARCOAL SOLAR SCREEN

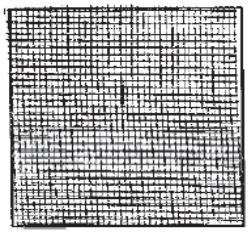

GRAY FIBERGLASS

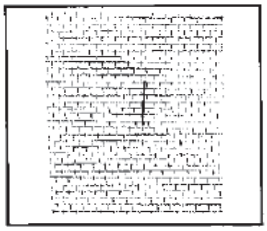

BRITE ALUMINUM

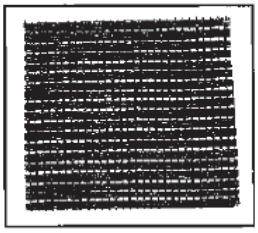

GRAY SOLAR SCREEN

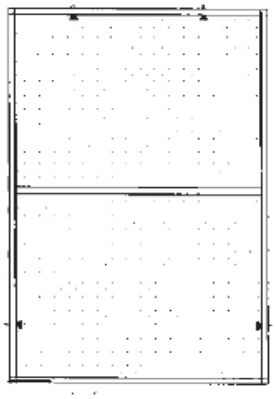

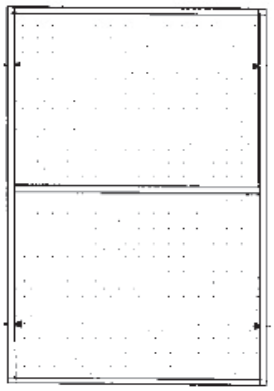

*7/16" SCREEN FRAME
*PLUNGERS BUILT INTO FRAME FOR EASY INSTALLATION
*DESIGNED FOR USE ON DOUBLE HUNG WINDOWS WITH GROVED BRICK MOLD
*FIBERGLASS OR ALUMINUM WIRE AVAILABLE
*COLORS: MILL, WHITE, BRONZE, BEIGE, AND SANDSTONE
*STRAIGHT CUT CORNERS WITH EXTERNAL PLASTIC CORNER KEYS
*STANDARD SIZES AND SPECIAL SIZES

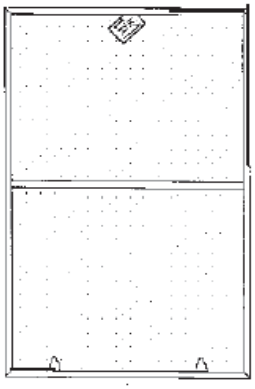

Mitre Corners

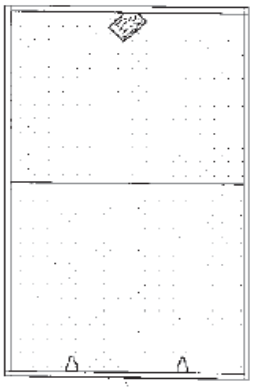

Straight Cut Corners with External Plastic Corner Keys

*7/16" SCREEN FRAME
*INSTALLATION HARDWARE INCLUDED
*DESIGNED FOR USE ON WOOD DOUBLE-HUNG WINDOWS
*FIBERGLASS OR ALUMINUM WIRE AVAILABLE
*COLORS: MILL, WHITE, BRONZE, BEIGE, AND SANDSTONE
*STANDARD SIZES AND SPECIAL SIZES

NOTE:CONTACT YOUR SALES REP FOR SCREENS AND PARTS

SURFACE LATCH 3-1/2”

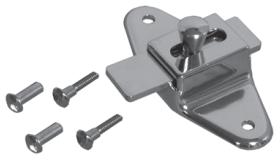

500552 - CHROME PLATED
940022 - STAINLESS STEEL

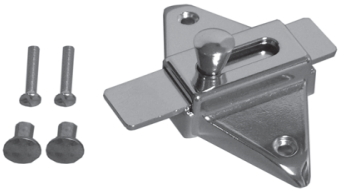

940173 - CHROME PLATED
946006 - STAINLESS STEEL

OFFSET SURFACE LATCH 3-1/2”

940136 - CHROME PLATED
940137 - STAINLESS STEEL

OFFSET SURFACE LATCH 2-3/4”

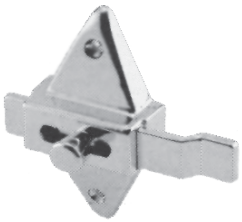

940257 - CHROME PLATED
940195 - STAINLESS STEEL

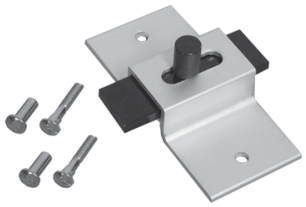

001501 - CHROME PLATED

SURFACE LATCH

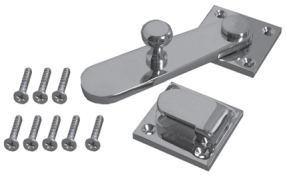

940205 - CHROME PLATED

SURFACE LATCH

940206 - CHROME PLATED

CONCEALED SLIDE BOLT LATCH

945456 - CHROME PLATED

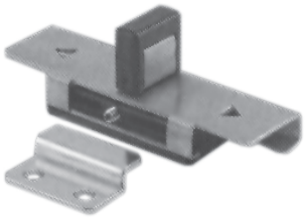

940211 - STAINLESS STEEL

SURFACE LATCH 1-7/8”

940209 - STAINLESS STEEL

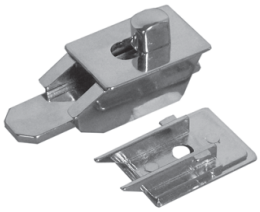

940212 - CHROME PLATED

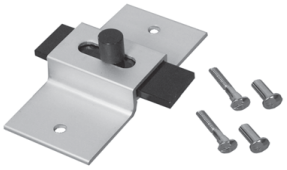

940208 - STAINLESS STEEL
940207 - CHROME PLATED

940214 - ADA CONCEALED LATCH, CHROME

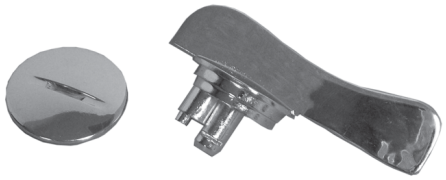

940216 - CHROME ADA CONVERSION

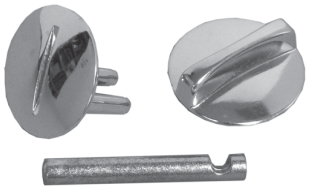

500390 - CONCEALED STALL DOOR LATCH **CHROME**

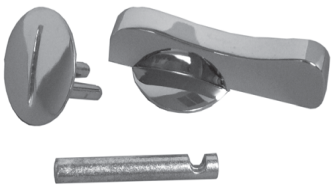

500391 - CHROME ADA CONVERSION

940213 - CHROME ADA CONVERSION

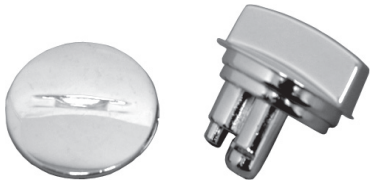

003106 - CHROME CONCEALED LATCH

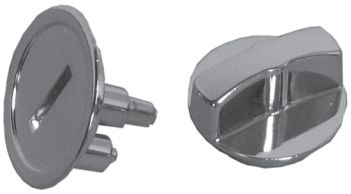

940174 - CHROME DOOR LATCH

000817 - CHROME

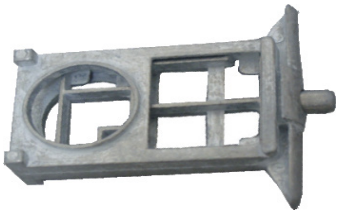

000794 - CONCEALED LATCH

940215 - CHROME ADA CONVERSION

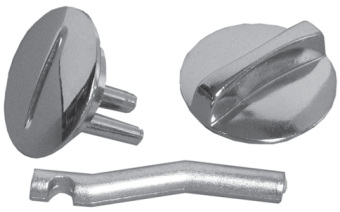

000790 - CHROME CONCEALED LATCH

TWO EAR BRACKETS

Chrome	Stainless Steel	Panel Size	Bracket Length
940583	940586	1/2”	2-1/2”
940585	940588	3/4”	2-1/2”
940105	940589	7/8”	2-1/2”
006804	940590	1”	2-1/2”
007009	940592	1-1/4”	2-1/2”

TWO EAR BRACKETS X-LONG

Chrome	Stainless Steel	Panel Size	Bracket Length
940621		1”	3-1/2”
940623		1-1/4”	3-1/2”

ONE EAR BRACKETS

Chrome	Stainless Steel	Panel Size	Bracket Length
940593	940596	1/2”	2-1/2”
940594	940597	3/4”	2-1/2”
940595	940598	7/8”	2-1/2”
001279	940599	1”	2-1/2”
940607	940608	1-1/8”	2-1/2”
007008		1-1/4”	2-1/2”

ONE EAR BRACKETS X-LONG

Chrome	Stainless Steel	Panel Size	Bracket Length
940619		1”	3-1/2”
940620		1-1/4”	3-1/2”

TWO EAR URINAL

Chrome	Stainless Steel	Panel Size	Bracket Length
940628	940609	1/2”	2-1/2”
940631	940632	3/4”	2-1/2”
940633	940634	7/8”	2-1/2”
940621	000925	1”	2-1/2”
000606		1-1/4”	2-1/2”

WING BRACKETS

Chrome	Stainless Steel	Panel Size	Bracket Length
940744		1-1/4”	6”
404415		1”	12”

“U” BRACKETS

Chrome	Stainless Steel	Panel Size	Bracket Length
940635	940636	1/2”	1.30”
940637	940638	3/4”	1.30”
940639	940642	7/8”	1-1/4”
003376	940643	1”	1-3/8”
940644		1-1/4”	1-3/8”

“U” BRACKETS X-LONG

Chrome	Stainless Steel	Panel Size	Bracket Length
940646		1”	2-1/2”
940649		1-1/4”	2-1/2”

TWO PIECE BRACKETS

Chrome	Stainless Steel	Panel Size	Bracket Length
003108	940654		2-1/2”
003107	940657		3-1/2”

940218 -
1-1/4" IN OR OUTSWING
FOR CONCEALED LATCH
WITH FLAT BAR

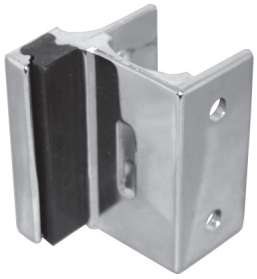

008296 -
1-1/4" CHROME
PLATED INSWING
FOR SLIDE LATCH

940217 -
1-1/4" INSWING FOR
THROW LATCH

940221 -
1-1/4" OUTSWING
FOR SLIDE LATCH

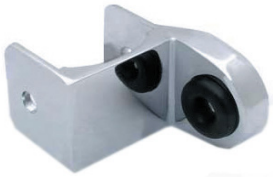

940219 -
1-1/4" OUTSWING
FOR SLIDE LATCH

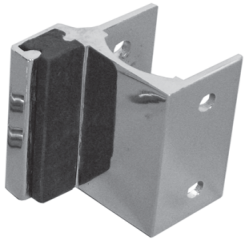

201162 -
1-1/4" IN OR OUTSWING
FOR CONCEALED LATCH
WITH FLAT BAR

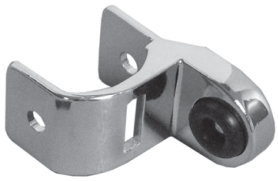

9

940220 -
1-1/4" IN OR OUTSWING
FOR CONCEALED LATCH
WITH ROUND BAR

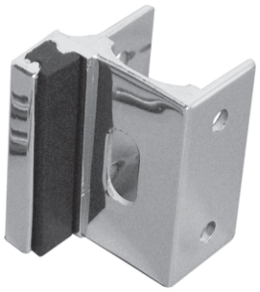

940228 -
1-1/4" IN OR OUTSWING
FOR CONCEALED LATCH

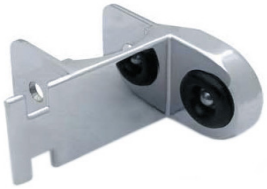

940177 -
1-1/4" IN OR OUTSWING
FOR CONCEALED LATCH

940177 -
1-1/4" IN OR OUTSWING
FOR CONCEALED LATCH
WITH ROUND BAR
940229 -
CAST STAINLESS STEEL

INSWING FOR SIDE LATCH		
Chrome	**Stainless Steel**	**Post Size**
004563	**940232**	1-1/4”
940230		1-1/8”
940231	**940233**	1”

OUTSWING FOR SIDE LATCH		
Chrome	**Stainless Steel**	**Post Size**
501300	**940236**	1-1/4”
940234		1-1/8”
940235	**940237**	1”

INSWING OR OUTSWING FOR CONCEALED LATCH		
Chrome	**Stainless Steel**	**Post Size**
940238	**940239**	1-1/4”
	940240	1”

INSWING FOR THROW LATCH EMERGENCY ENTRANCE		
Chrome	**Stainless Steel**	**Post Size**
940243	**940244**	1-1/4”

INSWING KEEPER - ONE PIECE FOR SIDE LATCH	
Chrome	**Stainless Steel**
946005	**940252**

INSWING OR OUTSWING STRIKE - ONE PIECE FOR SIDE LATCH	
Chrome	**Stainless Steel**
946004	**940253**

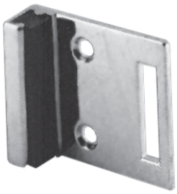

INSWING KEEPER ONE PIECE FOR THROW LATCH EMERGENCY ENGRANCE	
Chrome	**Stainless Steel**
940250	**940251**

INSWING-FLAT FOR THROW LATCH EMERGENCY ENTRANCE	
Chrome	**Stainless Steel**
008374	**940249**

INSWING-FLAT FOR SIDE LATCH	
Chrome	**Stainless Steel**
940245	**940251**

INSWING OR OUTSWING FLAT FOR CONCEALED LATCH	
Chrome	**Stainless Steel**
940247	**940248**

OUTSWING FLAT FOR SIDE LATCH	
Chrome	**Stainless Steel**
940241	**940242**

INSWING OR OUTSWING FOR 1-1/4” DOORS WITH CONCEALED LATCHES		
Chrome	**Stainless Steel**	**Post Size**
940255		1-1/4”

INSWING OR OUTSWING FOR CONCELED LATCH		
Chrome	**Stainless Steel**	**Post Size**
008365	**940254**	1-1/4”

OUTSWING FOR SIDE LATCH		
Chrome	**Stainless Steel**	**Post Size**
940260	**940261**	1-1/4”

INSWING FOR THROW LATCH EMERGENCY ENTRANCE		
Chrome	**Stainless Steel**	**Post Size**
940262	**940259**	1-1/4”

9

940263 -
INSWING - FLAT
"SPECIFY DOOR SIZE"

940264 -
OUTSWING - FLAT
"SPECIFY DOOR SIZE"

940265 -
INSWING - EMERGENCY
ENTRANCE "ADA"
SPECIFY DOOR SIZE

940276 -
INSWING - ONE PIECE

940278 -
IN OR OUTSWING -
ONE PIECE

INSWING

PART #	DOOR SIZE
940267	1/2"
940268	3/4"
940268	7/8"
940268	1"
940266 - KEEPER ADAPTER FOR ABOVE STRIKES	

OUTSWING

PART #	DOOR SIZE
940272	1/2"
940273	3/4"
940274	7/8"
940275	1"

OUTSWING FOR "ADA"
DOORS

PART #	DOOR SIZE
940279	1"
940280	3/4"

940277 -
OUTSWING - FLAT "ADA"
"SPECIFY POST SIZE"

9

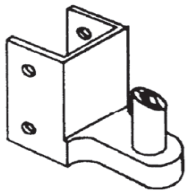

Chrome Plated Zamak	Cast Stainless Steel	Post Size	Description
940281	940282	1-1/4”	AMPCO
940283	940284	1-1/4”	GLOBAL
940285	940286	1-1/4”	FIAT

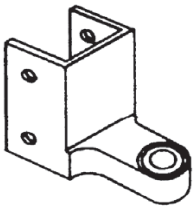

Chrome Plated Zamak	Cast Stainless Steel	Post Size	Description
940209	940210	1-1/4”	ACCURATE

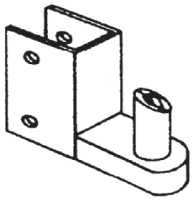

Chrome Plated Zamak	Cast Stainless Steel	Post Size	Description
940292	———	1/2”	———

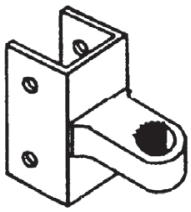

Chrome Plated Zamak	Cast Stainless Steel	Post Size	Description
940330	———	1”	M-2 TOP & BOTTOM

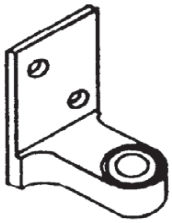

Chrome Plated Zamak	Cast Stainless Steel	Post Size	Description
940331	940333	1”	M-2 TOP & BOTTOM

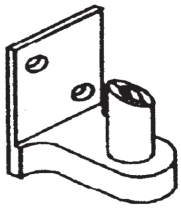

Chrome Plated Zamak	Cast Stainless Steel	Post Size	Description
940341	940342	———	AMPCO
940343	940344	———	G-3
940345	———	———	GENERAL

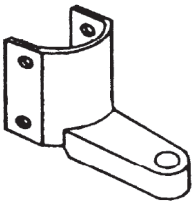

Chrome Plated Zamak	Cast Stainless Steel	Post Size	Description
940347	———	1-1/4”	GENERAL

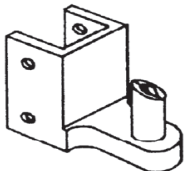

Chrome Plated Zamak	Cast Stainless Steel	Post Size	Description
940293	———	1-1/8”	G-2

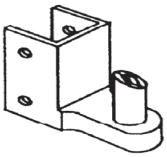

Chrome Plated Zamak	Cast Stainless Steel	Post Size	Description
940324	940327	1”	G-4

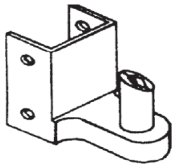

Chrome Plated Zamak	Cast Stainless Steel	Post Size	Description
940288	940289	1-1/4”	G-3

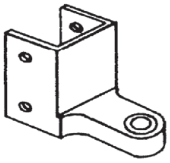

Chrome Plated Zamak	Cast Stainless Steel	Post Size	Description
940287	———	1-1/4”	SANYMETAL

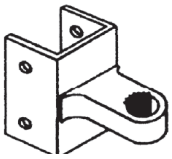

Chrome Plated Zamak	Cast Stainless Steel	Post Size	Description
940329	———	1-1/4”	M-2 TOP & BOTTOM

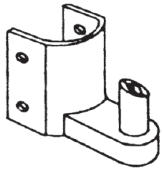

Chrome Plated Zamak	Cast Stainless Steel	Post Size	Description
009361	940346	1-1/4”	FLUSH METAL

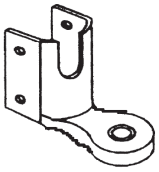

Chrome Plated Zamak	Cast Stainless Steel	Post Size	Description
940348	———	1-1/4”	SANYMETAL

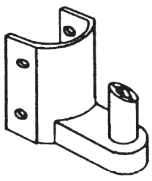

Chrome Plated Zamak	Cast Stainless Steel	Post Size	Description
947887	———	1-1/4”	AMPCO METPAR

9

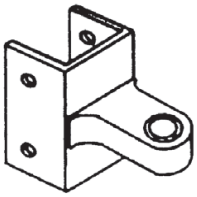

Chrome Plated Zamak	Cast Stainless Steel	Post Size	Description
940349	940356	1-1/4”	AMPCO
940350	940358	1-1/4”	GLOBAL
940353	940361	1-1/4”	Flush Metal
940352	940360	1-1/4”	General
940354	———	1-1/4”	Metpar

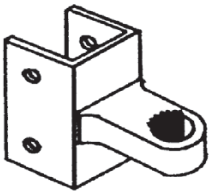

Chrome Plated Zamak	Cast Stainless Steel	Post Size	Description
940374	———	1”	M-2-Bottom

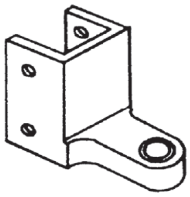

Chrome Plated Zamak	Cast Stainless Steel	Post Size	Description
940369	———	1-1/8”	G-2

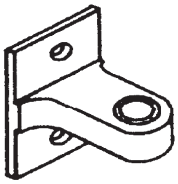

Chrome Plated Zamak	Cast Stainless Steel	Post Size	Description
940379	940383	———	Accurate
940378	940382	———	AMPCO
940381	———	———	General

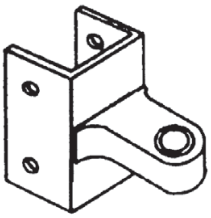

Chrome Plated Zamak	Cast Stainless Steel	Post Size	Description
940362	940363	1-1/4”	Accurate

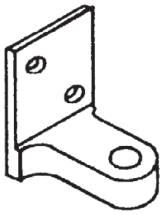

Chrome Plated Zamak	Cast Stainless Steel	Post Size	Description
940384	940386	———	G-3

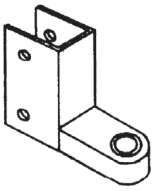

Chrome Plated Zamak	Cast Stainless Steel	Post Size	Description
940364	———	———	———

Chrome Plated Zamak	Cast Stainless Steel	Post Size	Description
009638	94378	1-1/4”	Flush Metal

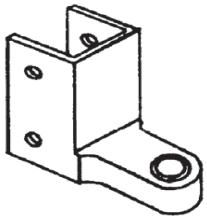

Chrome Plated Zamak	Cast Stainless Steel	Post Size	Description
940371	———	1”	G-4

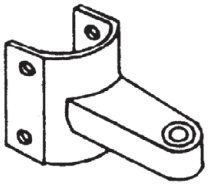

Chrome Plated Zamak	Cast Stainless Steel	Post Size	Description
940389	———	1-1/4”	General

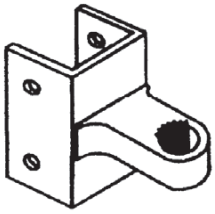

Chrome Plated Zamak	Cast Stainless Steel	Post Size	Description
940373	———	1-1/4”	M-Bottom

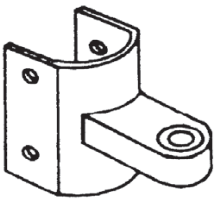

Chrome Plated Zamak	Cast Stainless Steel	Post Size	Description
947889	———	1-1/4”	Metpar

940390 -
1-1/4" SQUARE
PILASTER SHOE

940391 -
1-1/4" x 3"
POST SHOE

940395 -
1-1/4" SQUARE
POST SHOE

2" - **940392**
4" - **940393**
8" - **940394**
ALUMINUM "U"
CHANNEL

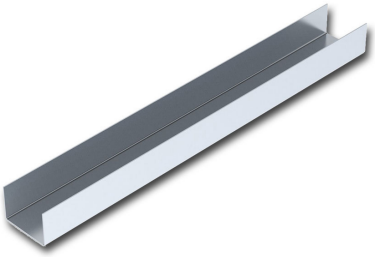

940396 -
PILASTER SHOE PACK
SPACER PLATE IS 3" x 10"

940398 -
POST PLUG FOR
1-3/4" PILASTER POST

940400 -
POST CAP FOR
1-3/4" PILASTER POST

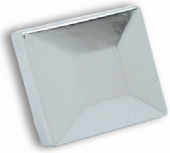

ANCHOR FOR PLASTIC
LAMINATE

940413 -
TOP "L" ANCHOR

940407 -
BOTTOM "L" ANCHOR

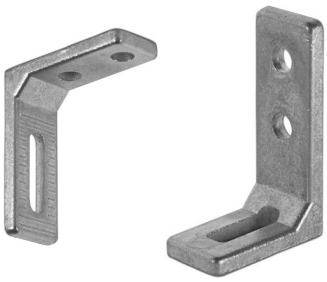

940412 -
PILASTER ANCHOR FORK

940411 -
SPRING CLIP

940399 -
1-1/4" PILASTER POST
FLOOR ANCHOR BRACKET

940409-
ONE EAR POST FLOOR
ANCHOR BRACKET

9

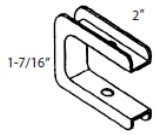

Part #	End Style	Door Size	Description
940416	Open	1/2"	——

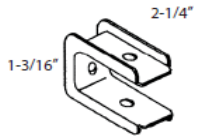

Part #	End Style	Door Size	Description
940418	Open	1/2"	——

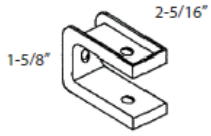

Part #	End Style	Door Size	Description
940421 940422	Open	1" 7/8"	——

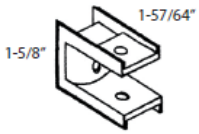

Part #	End Style	Door Size	Description
940423	Open	1"	Sanymetal

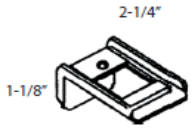

Part #	End Style	Door Size	Description
940426	Open	1"	——

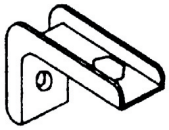

Part #	End Style	Door Size	Description
940437	Open	1/2"	Sanymetal

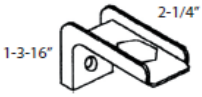

Part #	End Style	Door Size	Description
940424	Open	1"	Use w/ Large Cam

Part #	End Style	Door Size	Description
940427	Open	1-1/4"	Shanahan

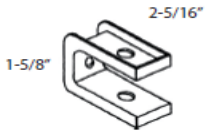

Part #	End Style	Door Size	Description
943020	Closed	1"	——

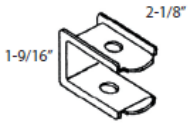

Part #	End Style	Door Size	Description
940431	Open	1"	Fiat

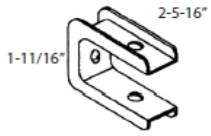

Part #	End Style	Door Size	Description
940432	Open	3/4"	——

Part #	End Style	Door Size	Description
940438	Open	1/2"	Fiat

Part #	End Style	Door Size	Description
940436	Closed	1"	——

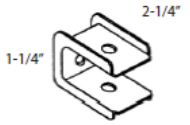

Part #	End Style	Door Size	Description
940419	Open	1-1/4"	Shanahan

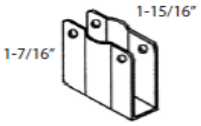

Part #	End Style	Door Size	Description
940417	Open	1/2"	——

Part #	End Style	Door Size	Description
940433 940434	Open	——	——

940414

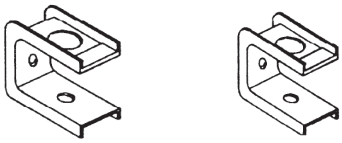

940429 - Top & Bottom M Brackets Open Style

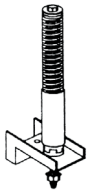

940428

Part #	Cams
943002	Squared-Unshaved
940473	Squared-Shaved
940474	Round for 5/8” Pintle
940476	Round for 1/2” Pintle
940475	Round-Keylock for 1/2” Pintle
940478	Set for M-Hinges

Part #	Pintles
008063	5/8” Diameter
940477	1/2” Diameter
940478	Set for M-Hinges

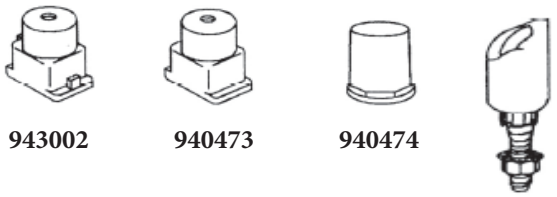

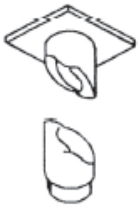

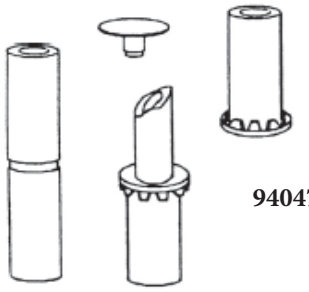

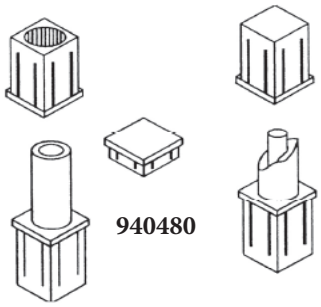

9

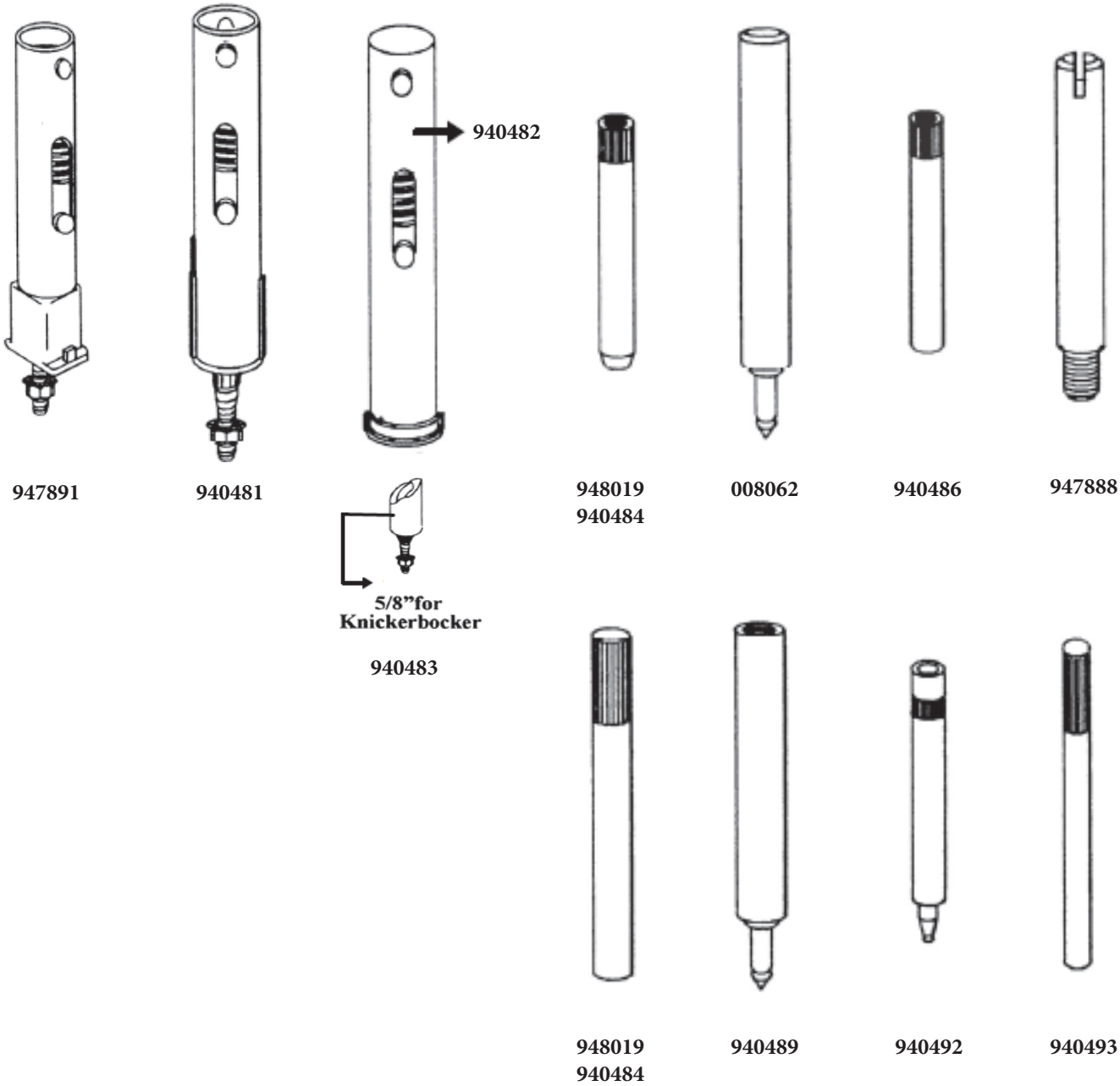

Part #	Candle Cams
947891	Metpar
940481	General
940482	Knickerbocker for Steel Doors

Part #	Hinge Pins	Dimensions	Use For
008062	Steel	3/8" x 3.70"	Shanahan
947888	Threaded Steel	3/8" x 3"	Ampco & Metpar
940492	Knurled Steel	1/4" x 2-1/2"	General
940486	Knurled Steel	5/16" x 3"	Sentry
948019	Knurled Plastic	3/8" x 2-1/2"	Sanymetal
940484	Knurled Steel	3/8" x 2-1/2"	Sanymetal
940487	Knurled Steel	3/8" x 3"	
940488	Stainless Steel	3/8" x 3"	
940489	Steel-Zinc Plated	7/16" x 3"	Fiat
940493	Knurled Steel	7/32" x 3-1/4"	Ampco

HEADRAIL BRACKET SET WITH FASTENERS

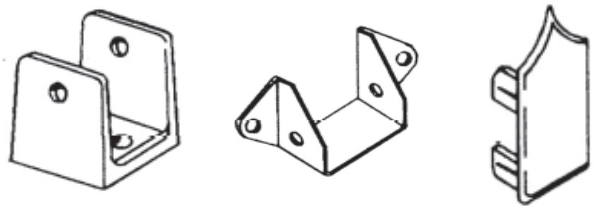

940494

HEADRAIL BRACED PARTITION BRACKET SET WITH FASTENERS

940496

POST SHOE & CAP SET

940494

LATCH & KEEPER SET WITH FASTENERS

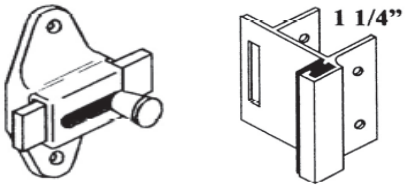

940498

PILASTER WALL BRACKET SET WITH FASTENERS

940498

URINAL BRACKET SET WITH FASTENERS

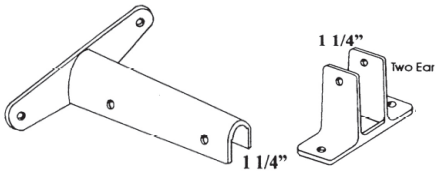

940494

WALL & “U” BRACKET SET WITH FASTENERS

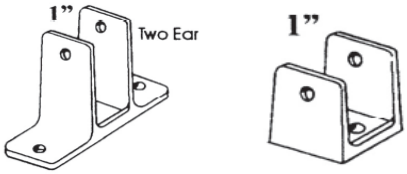

940498

9

QWIK-FIX KITS

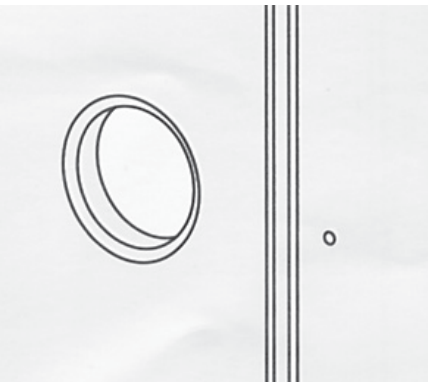

BEFORE QWIK-FIX

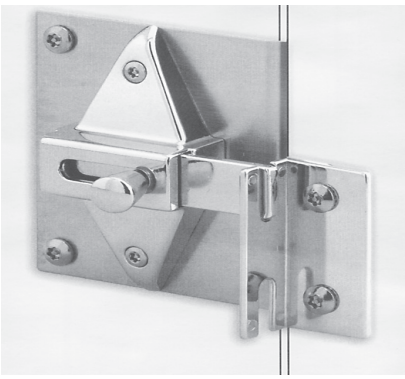

INSWING

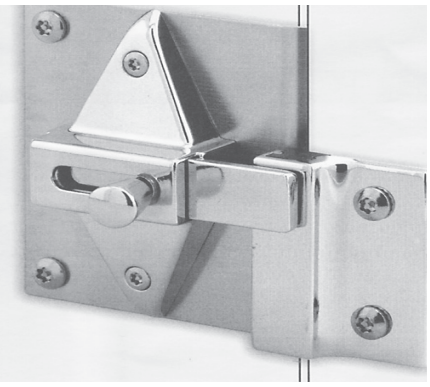

OUTSWING

*REPLACE BROKEN OR "CONCEALED LATCHES" WITH A SURFACE MOUNT SIDE LATCH
*STAINLESS STEEL "WRAP-AROUND" COVER PLATE
*FOR SQUARE OR ROUND EDGE 1" DOORS (INSWING OR OUTSWING)
*INCLUDES NECESSARY ACCESSORY PARTS
*TAMPER PROOF, 6 LOBE WITH PIN, FASTENERS INCLUDING "TORX" HEX BITS FOR SECURING
*HIDES UNSIGHTLY HOLES IN DOORS
*INCREASES STRENGTH AND DURABILITY

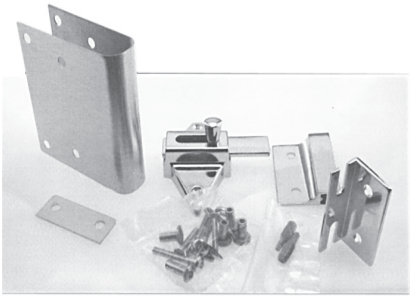

INSWING FOR 1" DOORS
404080 - ROUNDED EDGE
404083 - SQUARE EDGE

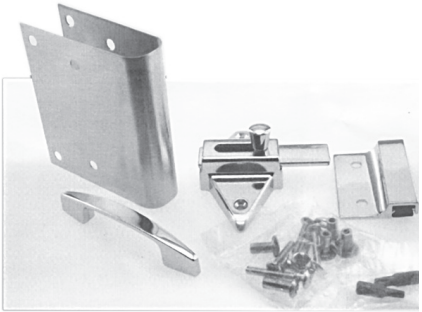

OUTSWING, WITH PULL FOR 1" DOORS
404082 - ROUNDED EDGE
404086 - SQUARE EDGE

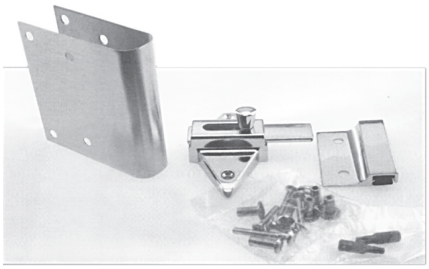

OUTSWING FOR 1" DOORS
404081 - ROUNDED EDGE
404084 - SQUARE EDGE

BUMPER/HOOK

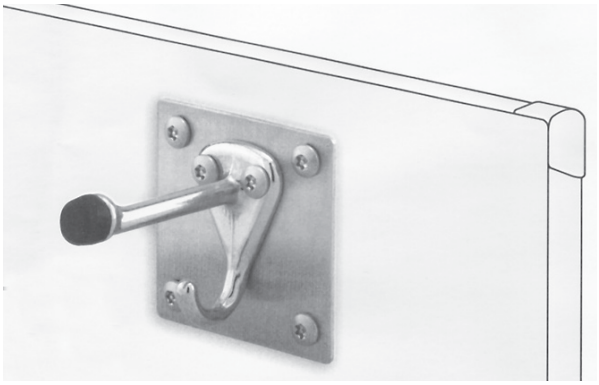

*STAINLESS STEEL COVER/MOUNTING PLATE,
*HIDES DAMAGED HOLES
*STAINLESS STEEL BUMPER/ HOOK
*STAINLESS STEEL "TAMPER-PROOF", SIX LOBE WITH PIN, FASTENERS
*"TORX" HEX BIT FOR SECURING FASTENERS
*OFFERS INCREASED STRENGTH AND DURABILITY

404087 - STAINLESS STEEL BUMPER HOOK KIT

CONTINUOUS "PIANO" HINGES

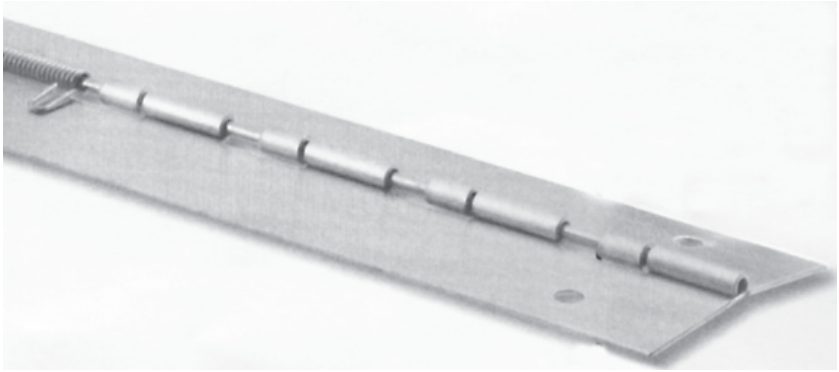

*BRUSHED FINISH
*SIX HOLES PER LEAF
*1/8" DIAMETER PIN
*3" WIDE x 57-1/2" LONG
*16ga STAINLESS STEEL

404088 - NO SPRING
404089 - RIGHT HAND IN, WITH SPRING
404093 - LEFT HAND IN, WITH SPRING

SECTION TEN
INSTITUTIONAL REPAIR PARTS

TOILET FLUSH INLET AND BLOWOUT JET DETAIL

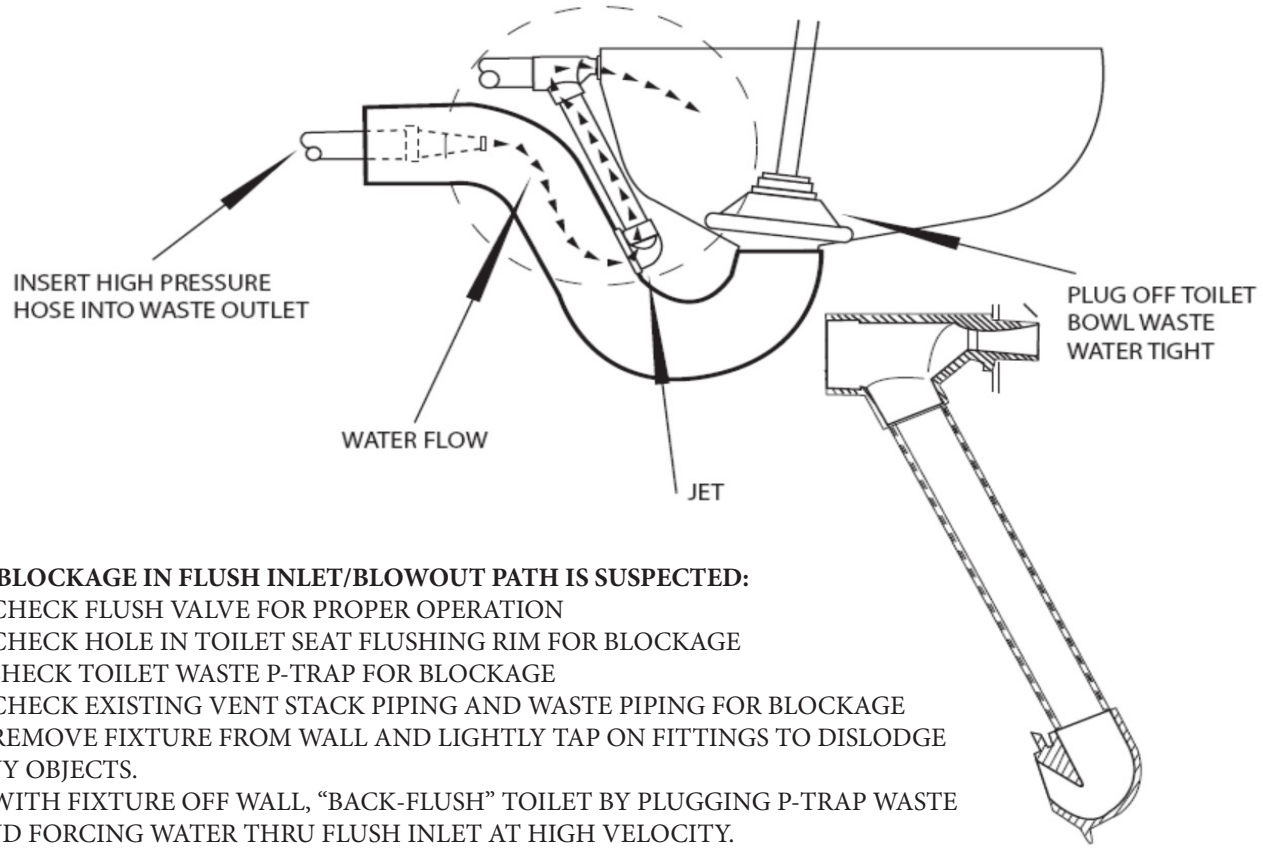

IF BLOCKAGE IN FLUSH INLET/BLOWOUT PATH IS SUSPECTED:

1. CHECK FLUSH VALVE FOR PROPER OPERATION
2. CHECK HOLE IN TOILET SEAT FLUSHING RIM FOR BLOCKAGE
3 CHECK TOILET WASTE P-TRAP FOR BLOCKAGE
4. CHECK EXISTING VENT STACK PIPING AND WASTE PIPING FOR BLOCKAGE
5. REMOVE FIXTURE FROM WALL AND LIGHTLY TAP ON FITTINGS TO DISLODGE ANY OBJECTS.
6. WITH FIXTURE OFF WALL, "BACK-FLUSH" TOILET BY PLUGGING P-TRAP WASTE AND FORCING WATER THRU FLUSH INLET AT HIGH VELOCITY.

FLOOD-TROL TESTING

PLUG OFF TOILET AND FLUSH TOILET SEVERAL TIMES. IF THE FLOOD-TROL VALVE DOES NOT SHUT OFF THE WATER FLOW WHEN IT SHOULD THEN USE THE STEPS LISTED BELOW TO FIND THE PROBLEM.

1. CHECK FOR OBVIOUS LOOSE CONNECTIONS, KINKED TUBES, ECT.

2. CHECK FOR VACUUM USING A VACUUM GAUGE ON THE VACCUM GENERATOR LINE.. IT SHOULD READ 10 TO 20" OF Hg WHEN THE TOILET IS FLUSHING. IF YOU DO NOT HAVE A GAUGE, FEEL FOR VACUUM WITH YOUR FINGER

3. CONNECT AN AIR-CONTROL HAND BUTTON DIRECTLY TO THE TOP OF THE FLOOD-TROL LID. DEPRESS HAND BUTTON WHILE CONNECTING TO THE FLOOD-TROL, THEN RELEASE THE BUTTON. IF THE FLOOD-TROL IS OKAY, NO WATER SHOULD FLOW WHEN THE TOILET IS FLUSHED. IF NOT, THE FLOOD-TROL HAS A VACUUM LEAK: HOLE IN AIR DIAPHRAGM, DIAPHRAGM HAS SEPERATED FROM THE MAGNET, CRACKED LID, OR A LOOSE LID. IF TEST KEEPS WATER FROM FLOWING(RETEST BY TRYING FLUSH VALVE AFTER ABOUT ONE MINUTE.) THEN PROCEED TO STEP '4'

4. RECONNECT THE 1/8" LINE FROM THE RESET VALVE TO THE FLOOD-TROL LID. NEXT, DISCONNECT THE TWO 1/4" LINES FROM THE RESET VALVE AND CONNECT THE PUSHBUTTON TO ONE OF THE OPEN PORTS. DEPRESS THE PUSHBUTTON, THEN COVER THE PORT. cHECK TO SEE IF THE FLUSH VALVE STILL ACTUATES, IF IT DOES, THE RESET VALVE IS UNABLE TO HOLD A VACUUM OR THE 1/8" PLASTIC TUBE IS BAD (KINKED, PUNCTURED, OR NOT ROUND CHECK FOR FLAT SIDE ON TUBE.)

ACORN FLOOD-TROL VALVE ASSEMBLY (NEW STYLE)

1	**605400**	FLOOD-TROL VALVE ASSEMBLY
2	**805166**	RESET VALVE ASSEMBLY
3	**1895-450-000**	1/8" COMPRESSION NUT
4	**2563-132-199**	LOCKNUT
5	**2150-001-199**	1/8" O.D. x 12" LOW DENSITY PE TUBE
6	**2563-145-001**	MOUNTING BRACKET ASSEMBLY
7	**801807**	#8-32 x 1-1/4" PHILLIPS HEAD SCREW
8	**801808**	#8 LOCKWASHER
9	**802033**	COVER PLATE
10	**802481**	DIAPHRAGM ASSEMBLY
11	**801921**	MOTOR HOUSING
12	**0401-026-000**	O-RING
13	**801922**	SEPARATOR CUP
14	**2563-008-000**	PILOT ORIFICE PLATE SPRING
15	**801924**	PILOT ORIFICE PLATE ASSEMBLY
16	**801927**	O-RING
17	**2563-140-000**	RESET SWITCH INTERCONNECTION ASSEMBLY
18	**805218**	L/R HAND FLOOD-TROL NUT
19	**0116-106-000**	1/4" x 1" RND HD PHILIPS SS SCREW
20	**2563-081-001**	BONNET ASSEMBLY
21	**0401-007-000**	O-RING
22	**801074**	SPRING
23	**805168**	DIAPHRAGM ASSEMBLY
24	**810121**	FLOOD-TROL BODY
25	**0302-005-000**	1/4"-20 STN. STL NUT
26	**0411-022-000**	FLOOD-TROL GASKET
27	**805275**	SEALING GASKET
28	**1895-120-000**	3/16" x 1/4" REDUCING IRON
29	**2160-001-199**	1/4" OD x 4" TUBING
30	**1895-451-000**	1/4" FERRULE NUT
31	**2194-007-199**	3/16" O.D. x 7ft VINYL TUBING
32	**2160-003-199**	1/4" O.D. x 3ft TUBING
33	**1895-102-001**	1/4" UNION CONNECTOR w/GRIPPER ASSEMBLY

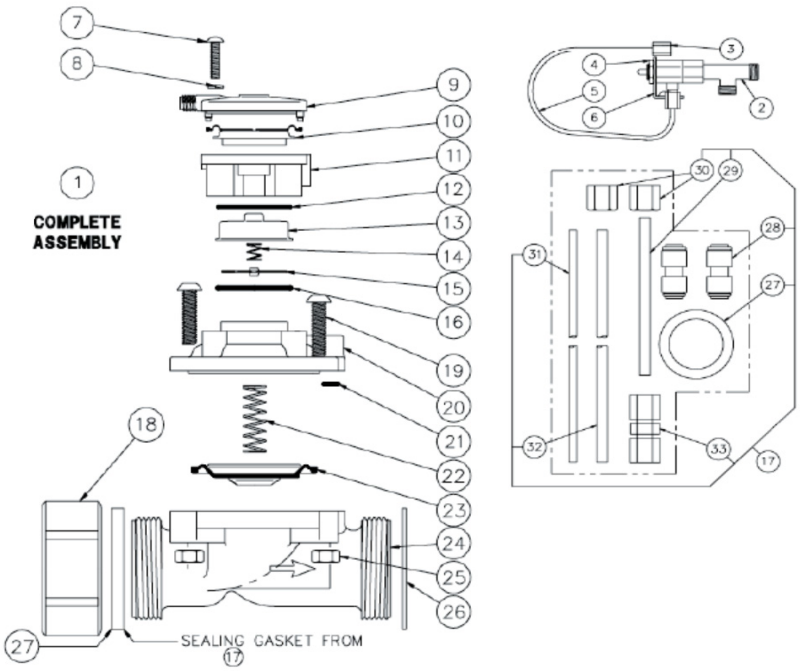

ACORN FLOOD-TROL VALVE ASSEMBLY (OLD STYLE)

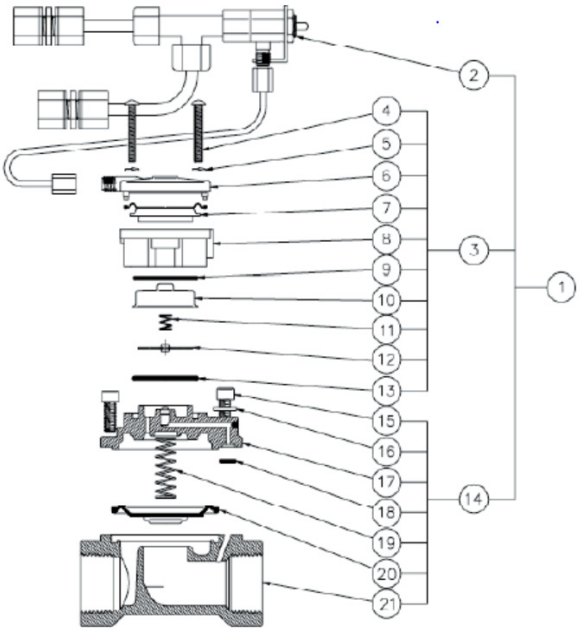

1	**2563-100-001**	FLOOD-TROL VALVE ASSEMBLY - COMPLETE
2	**805165**	RESET SWITCH ASSEMBLY
3	**802056**	SERVOMOTOR ASSEMBLY
4	**801807**	#8-32 x 1-1/4" PHIL. HD
5	**801808**	#8 LOCKWASHER
6	**802033**	COVER PLATE
7	**802481**	DIAPHRAGM ASSEMBLY
8	**801921**	MOTOR HOUSING
9	**0401-026-000**	O-RING
10	**801922**	SEPARATOR CUP
11	**2563-008-000**	PILOT ORIFICE
12	**801924**	PILOT ORIFICE PLATE ASSEMBLY
13	**801927**	O-RING
14	**2563-101-001**	VALVE BODY ASSEMBLY
15	**0211-003-000**	1/4" -20 HEX SOCKET CAP
16	**0337-050-000**	1/4" LOCKWASHER
17	**2563-109-001**	BONNET ASSEMBLY
18	**0401-007-000**	O-RING
19	**801074**	SPRING
20	**805168**	DIAPHRAGM ASSEMBLY
21	**2563-101-199**	VALVE BODY

ACORN
LOGAN VALVES REPAIR PARTS
(AIR-CONTROL METERING SERVOMOTOR ASSY.) JANUARY 1984-PRESENT

1	**801806**	METERING SERVOMOTOR ASSEMBLY
2	**801807**	#8-32 x 1-1/4" LG. PHILLIPS
3	**801808**	#8 LOCKWASHER
4	**801809**	COVER PLATE-METERING
5	**801811**	DIAPHRAGM SPRING
6	**801812**	DIAPHRAGM
7	**801813**	MAGNET CUP ASSEMBY
8	**801814**	ACTUATOR SPRING
9	**801921**	MOTOR HOUSING
10	**801822**	SEPARATOR CUP "O"-RING
11	**801922**	SEPARATOR CUP
12	**801923**	ORIFICE PLATE SPRING
13	**801924**	ORIFICE PLATE ASSEMBLY
14	**804163**	WATER DIAPHRAGM ASSEMBLY
15	**804164**	TIMER ASSEMBLY
16	**804165**	#8-32 STN.STL. HEX NUT
17	**801575**	O-RING
18	**804167**	SEAT

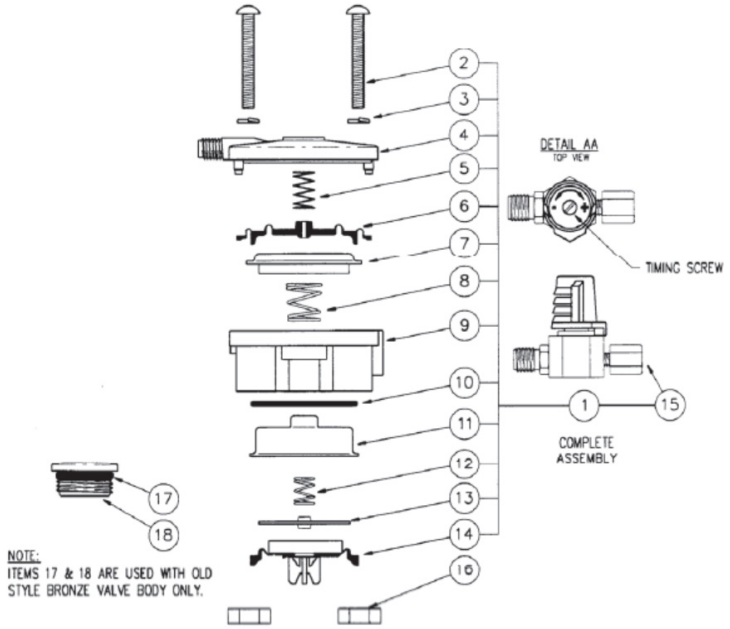

NEW STYLE
PLASTIC AIR-CONTROL CHECK STOP STRAINER ASSY. DECEMBER 1995-PRESENT

1	**804168**	CHECKSTOP STRAINER (COMPLETE ASSEMBLY
2	**804169**	STOP BODY ASSEMBLY
3	**804170**	STOP BONNET
4	**804171**	CHECK STEM
5	**804172**	STOP STEM
6	**804713**	1/2" NPS INLET HOSE- 6" LONG
7	**804173**	SPRING
8	**804175**	STRAINER
9	**801220**	O-RING
10	**801225**	O-RING
11	**801837**	O-RING

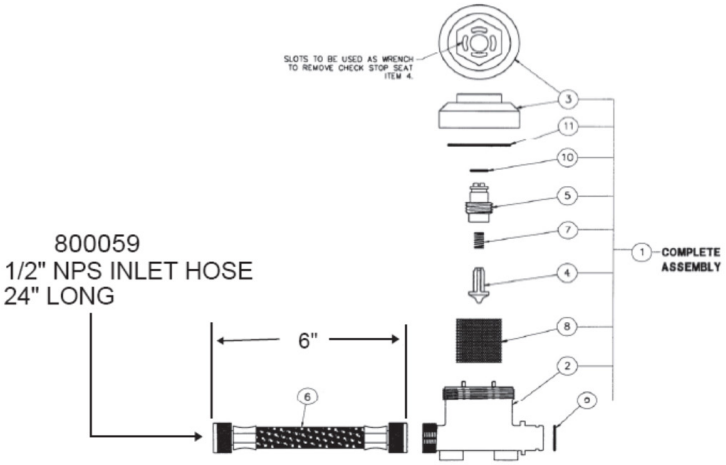

10

ACORN
SINGLE TEMP AIR-CONTROL VALVE BODY ASSEMBLY
LESS FLOW CONTROL

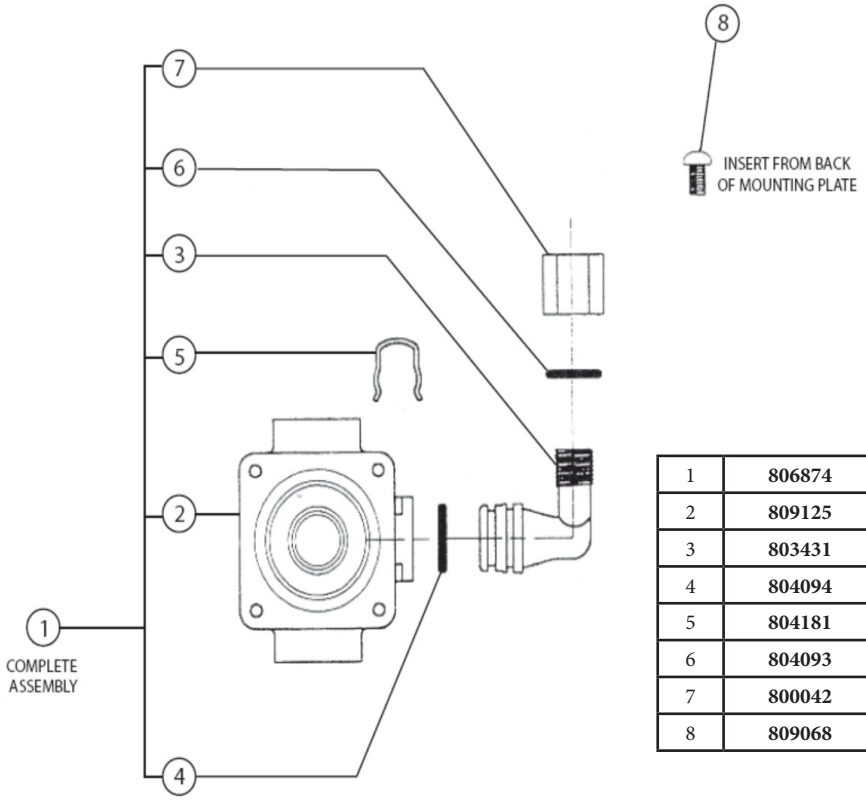

1	**806874**	SINGLE TEMP. VALVE ASSY. COMPLETE
2	**809125**	L.H. VALVE BODY
3	**803431**	SINGLE TEMP ELBOW
4	**804094**	O-RING
5	**804181**	RETAINING CLIP
6	**804093**	O-RING
7	**800042**	1/4” FERRULE NUT
8	**809068**	#10-32 x 1/2” STN.STL SCREW

ACORN - HOT & COLD AIR-CONTROL DUAL FIXTURE VALVE BODDY ASSEMBLY
APR. '94 TO PRESENT

1a	**800989**	H&C VALVE BODY COMPLETE .5 GPM
1b	**800897**	H&C VALVE BODY COMPLETE 2.5 GPM
2	**801734**	VALVE BODY - LOWER
3	**809124**	R.H. VALVE BODY - UPPER
4	**809125**	L.H. VALVE BODY - UPPER
5a	**809056**	H&C MIXING TEE ASSY. .5 GPM
5b	**809057**	H&C MIXING TEE ASSY. 2.5 GPM
6	**801735**	DUAL TEMP TEE BODY
7	**801575**	O-RING
8a	**809058**	FLOW CONTROLL .5 GPM - RED
8b	**801732**	FLOW CONTROL 2.5 GPM - BLACK
9	**801736**	FLOW CONTROL ADAPTER
10	**800042**	1/4" FERRELE NUT
11	**801733**	RETAINING CLIP
12	**801170**	O-RING
13	**809059**	MALE x MALE O-RING COUPLER ASSY.
14	**801220**	O-RING
15	**809067**	MALE x MALE O-RING CONNECTOR
16	**809068**	#10-32 x 1/2" STN. STL. SCREW

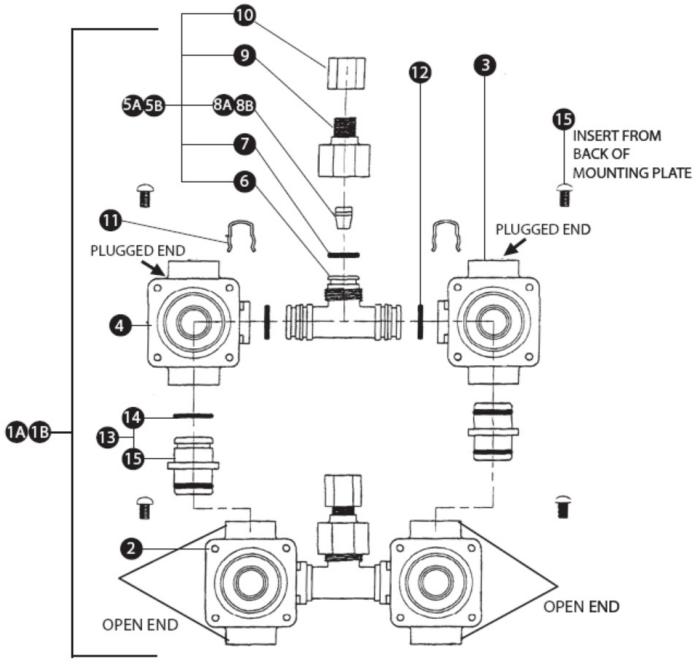

1	**801806**	METERING SERVOMOTOR ASSY.
2	**801807**	#8-32 x 1 1/4" LG. PHILLIPS
3	**801808**	#8 LOCKWASHER
4	**801809**	COVERPLATE - METERING
5	**801811**	DIAPHRAM SPRING
6	**801812**	DIAPHRAM
7	**801813**	MAGNET CUP ASSY.
8	**801814**	ACTUATOR SPRING
9	**801921**	MOTOR HOUSING
10	**801822**	SEPARATOR CUP O-RING
11	**801922**	SEPARATOR CUP
12	**801923**	ORIFICE PLATE SPRING
13	**801924**	ORIFICE PLATE ASSY
14	**804163**	WATER DIAPHRAM ASSY
15	**804164**	TIMER ASSY.
16	**804165**	#8-32 STN.STL. HEX NUT
17	**801575**	O-RING
18	**804167**	SEAT

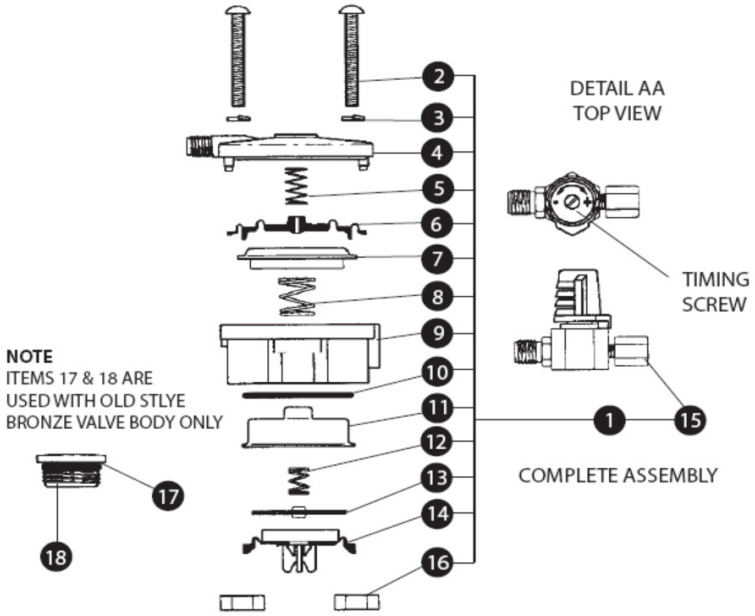

1	**804168**	CHECKSTOP STRAINER (COMPLETE ASSEMBLY)
2	**804169**	STOP BODY ASSEMBLY
3	**804170**	STOP BONNET
4	**804171**	CHECK STEM
5	**804172**	STOP STEM
6	**804713**	1/2" NPS INLET HOSE -6" LONG
7	**804173**	SPRING
8	**804175**	STRAINER
9	**801220**	O-RING
10	**801225**	O-RING
11	**801837**	O-RING

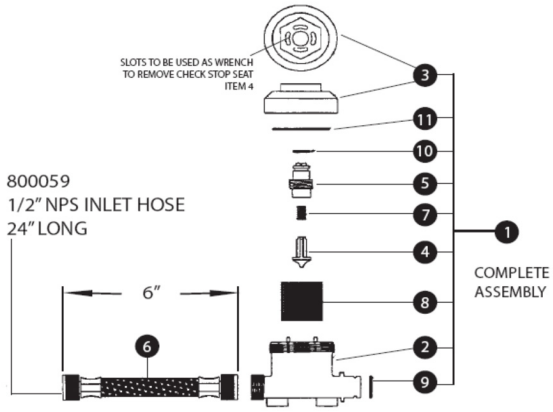

ACORN - EXPOSED VALVE STEM & HANDLE ASSEMBLY

1	**2656-000-020**	VALVE ASSEMBLY - NEUTRAL
1a	**2660-000-000**	NEUTRAL WELCH PLUG
2	**000819**	VALVE ASSEMBLY - HOT
2a	**805736**	HOT WELCH PLUG
3	**002907**	VALVE ASSEMBLY - COLD
3a	**805736**	COLD WELCH PLUG
4	**007816**	#10-32 X 1/2" HEX SOC FLH SCREW
5	**807024**	HANDLE
6	**808023**	BONNET NUT
7	**808024**	#6-32 X 7/64" CUP POINT SET SCREW
8	**805100**	STEM ASSEMBLY
9	**801701**	STEM PACKING
10	**805097**	STEM SLEEVE
11	**808022**	SLEEVE WASHER
12	**801362**	SEAT WASHER (TEFLON)
13	**801508**	#10-32 X 1/2" RDH MACHINE SCREW (MONEL)
14	**801910**	VALVE SEAT (BRASS)

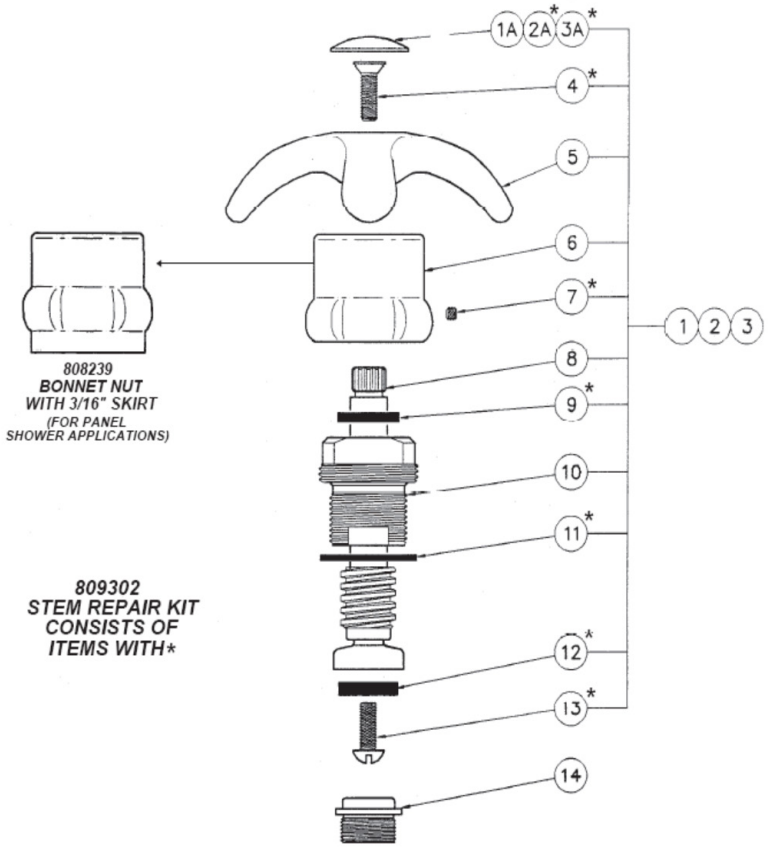

10

ACORN - WASH-WARE VALVES

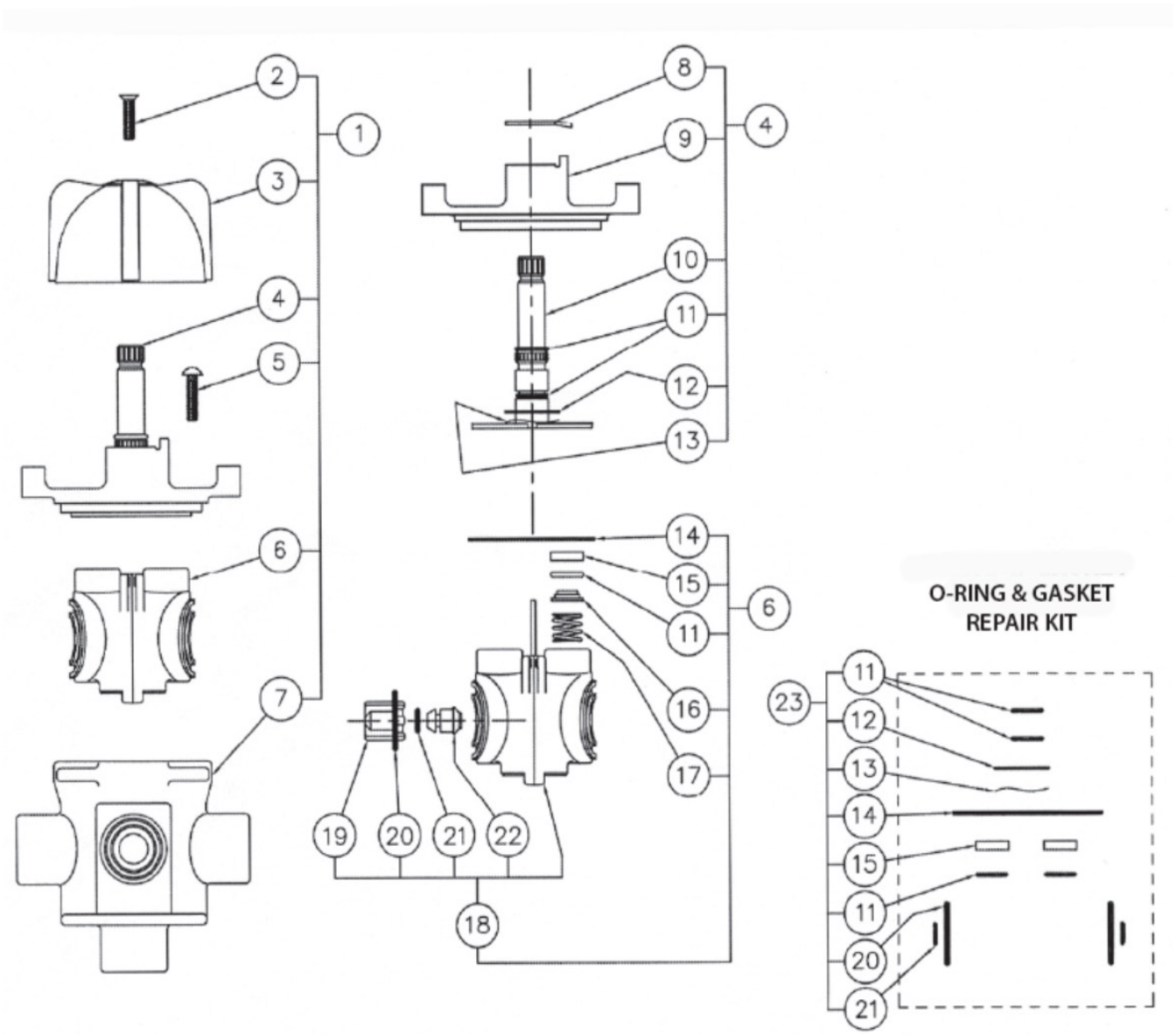

1	**2656-000-020**	VALVE ASSEMBLY - NEUTRAL	13	**804262**	THRUST WASHER
2	**2660-000-000**	NEUTRAL WELCH PLUG	14	**0431-021-000**	BONNET GASKET
3	**000819**	VALVE ASSEMBLY - HOT	15	**804263**	SHUT OFF DISK
4	**805736**	HOT WELCH PLUG	16	**2438-001-199**	SHUT OFF DISK RETAINER
5	**002907**	VALVE ASSEMBLY - COLD	17	**2438-002-000**	OUTLET SPRING
6	**805736**	COLD WELCH PLUG	18	**804261**	SAFTI-TROL CARTRIDGE
7	**007816**	#10-32 X 1/2" HEX SOC FLH SCREW	19	**808344**	PROPORTIONING VALVE CAP
8	**807024**	HANDLE	20	**0401-116-000**	O-RING
9	**808023**	BONNET NUT	21	**0401-009-000**	O-RING
10	**808024**	#6-32 X 7/64" CUP POINT SET SCREW	22	**2437-004-199**	PROPORTIONING VALVE
11	**805100**	STEM ASSEMBLY	23	**809975**	GASKET REPAIR KIT FOR CART & STEM ASSEMBLY
12	**801701**	STEM PACKING			

ACORN - SHOWER-WARE

FOR OLD LOGAN #100 SERIES AND #715 BENT ARM HEADS

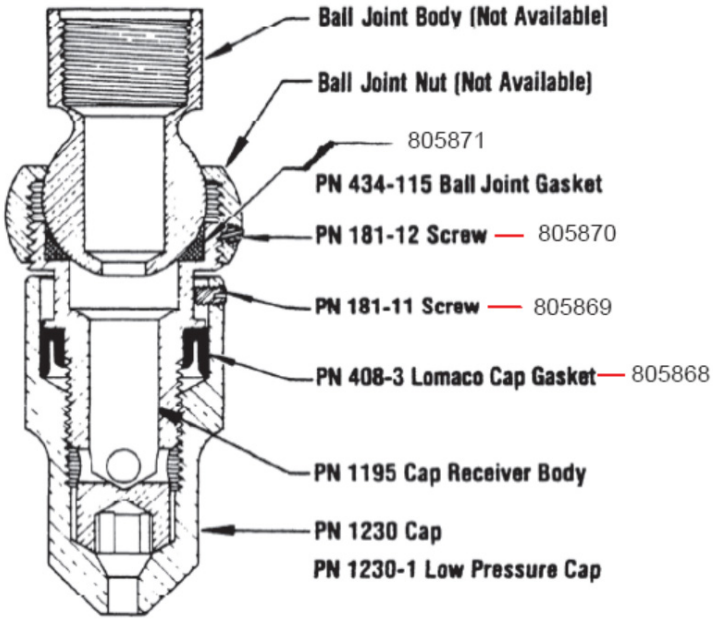

PART NUMBERS

Important: In 1974 Acorn acquired manufacturing rights from the former Logan Manufacturing Co., including trademarks, patents, detailed parts drawings, etc. You will be pleased to know that we have complete stocks of most items shown and that we will continue to supply these parts as long as there is sufficient demand for them. **Use Acorn PN-prefix part numbers for identification and ordering.**
Note: These part numbers are for shower heads manufactured by Logan Manufacturing Co., from 1937 through 1973. Acorn redesigned the Logan Wizard shower head in 1974. Refer to Acorn Shower-Ware part numbers for Logan Wiard shower heads manufactured after 1973.

Old Logan #	Acorn #
W-1	PN-1225
W-1LP	PN-1230-1
W-3	PN-1195
W-5	PN-1228
W-6	PN-1225
W-8	PN-1226
W-10	PN-1231
W-121	PN-181-12
W-122	PN-181-11
W-124	PN-408-3
W-125	PN-434-115
W-129	PN-413-1

FOR OLD LOGAN #200 SERIES FLANGED BRACKET HEADS

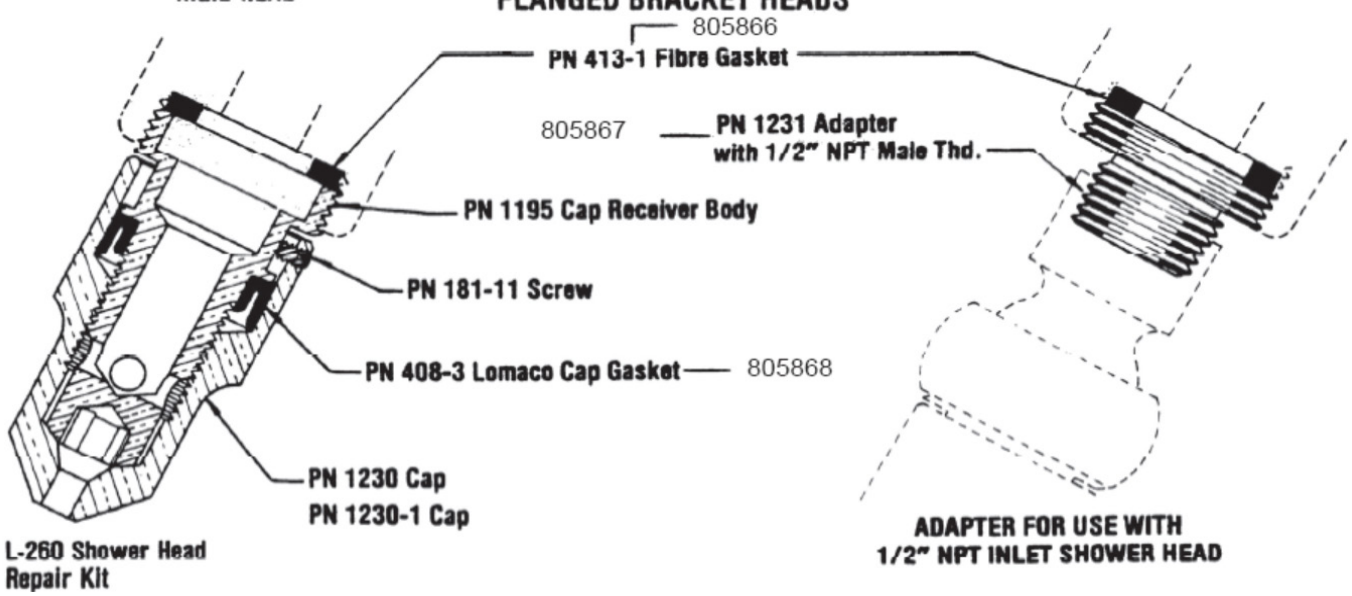

TITLE	DATE ISSUED	REVISED	CATALOG NUMBER
LOGAN 100, 200, & 715 SHOWER HEADS	1/24/74	8/23/83	LOGAN 100,200, & 700

ACORN - LOGAN VALVES, REPAIR PARTS

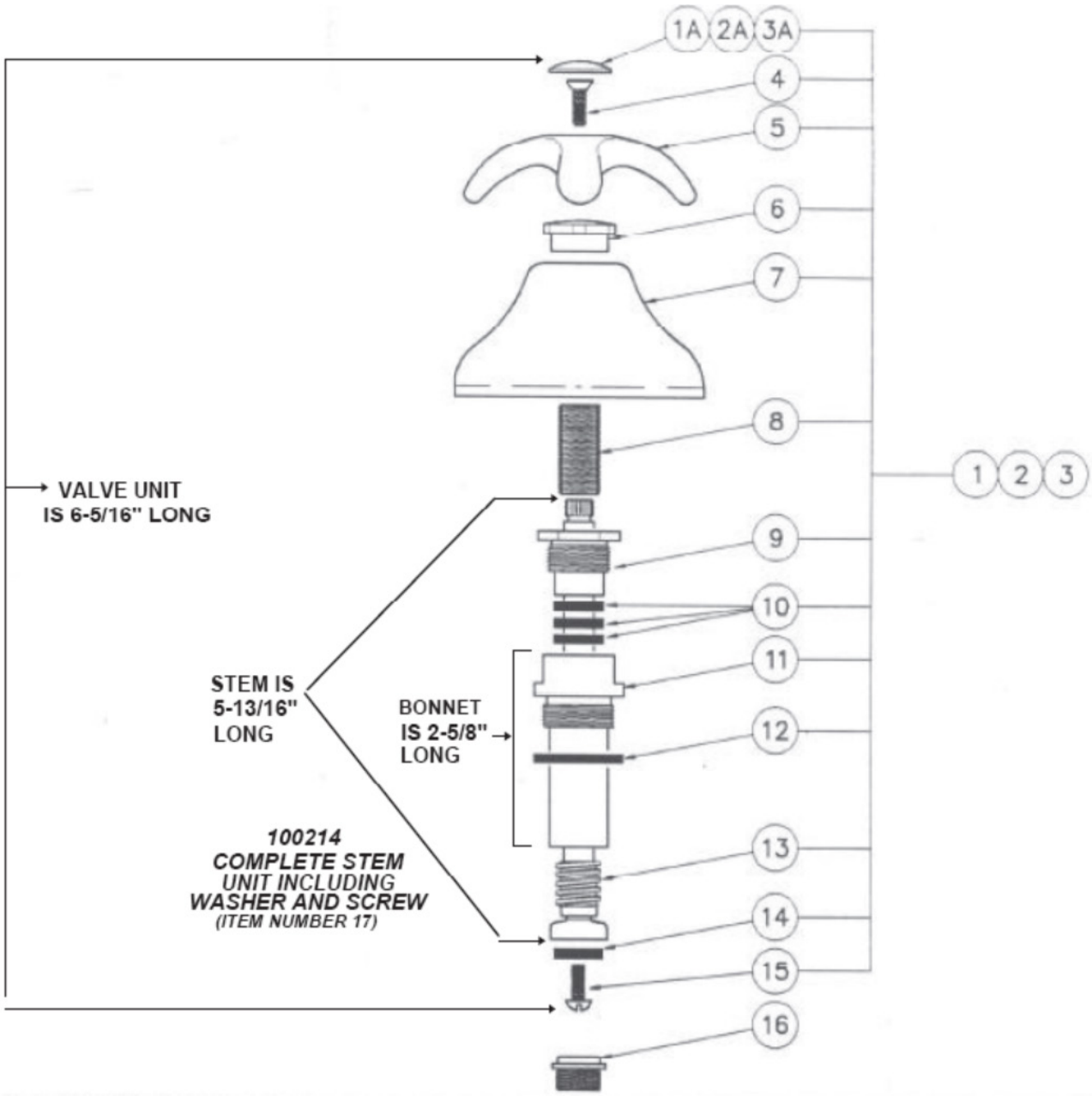

10

STEM AND HANDLE ASSEMBLY FOR 19 & 26 UNITS — JANUARY 1974 TO PRESENT

1	**2668-000-010**	VALVE ASSEMBLY - NEUTRAL	8	**100202**	BONNET NIPPLE
1A	**2660-000-000**	NEUTRAL WELCH PLUG	9	**100203**	PACKING NUT
2	**805731**	VALVE ASSEMBLY - HOT	10	**801701**	STEM PACKING
2A	**805736**	HOT WELCH PLUG	11	**805101**	STEM SLEEVE
3	**805732**	VALVE ASSEMBLY - COLD	12	**805865**	GUM RUBBER WASHER
3A	**805737**	COLD WELCH PLUG	13	**804978**	STEM ASSEMBLY
4	**007816**	#10-32 X 1/2" HEX SOC FLH SCREW	14	**801362**	SEAT WASHER - TEFLON
5	**807024**	HANDLE	15	**801508**	#10-32 X 1/2" - MONEL
6	**808289**	FLANGE NUT	16	**801910**	VALVE SEAT - BRASS
7	**809600**	ESCUTCHEON - 3-1/2" O.D.	17	**100214**	COMPLETE STEM UNIT

ACORN - VALVES, REPAIR PARTS

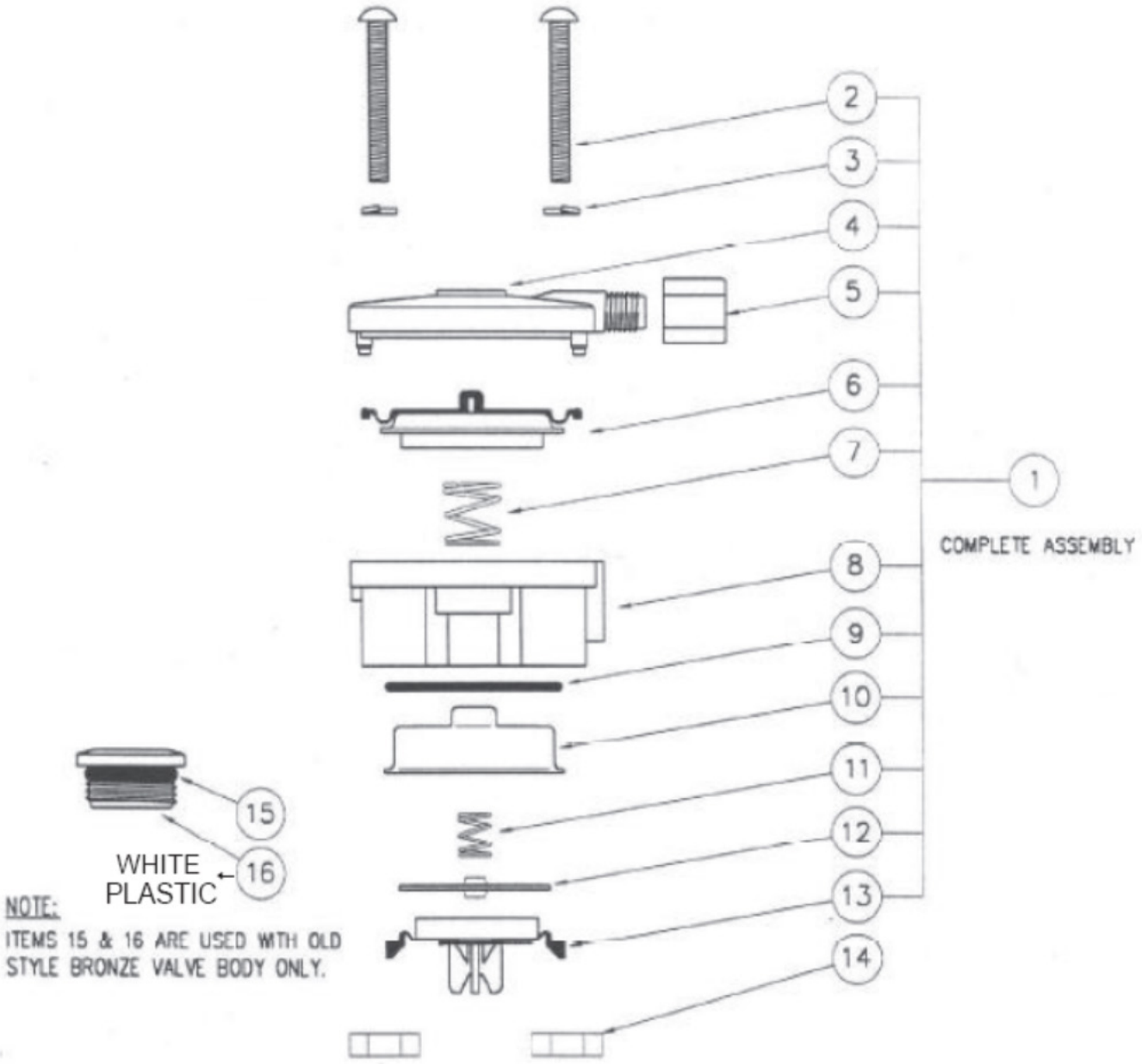

AIR-CONTROL NON-METERING SERVOMOTOR ASSEMBLY JANUARY 1984 TO PRESENT

1	**804298**	VALVE ASSEMBLY - NEUTRAL	9	**801822**	SEPARTOR "O"-RING
2	**801807**	NEUTRAL WELCH PLUG	10	**801922**	SEPARATOR CUP
3	**801808**	VALVE ASSEMBLY - HOT	11	**801923**	ORIFICE SPRING
4	**801801**	HOT WELCH PLUG	12	**801924**	ORIFICE PLATE ASSY.
5	**800041**	VALVE ASSEMBLY - COLD	13	**804163**	WATER DIAPHRAGM ASSY.
6	**801802**	COLD WELCH PLUG	14	**804165**	#8-32 STN. STEEL HEX NUT
7	**801814**	#10-32 X 1/2" HEX SOC FLH SCREW	15	**801121**	O-RING
8	**801921**	HANDLE	16	**804167**	SEAT

ACORN - PLASTIC AIR-CONTROL CHECK STOP STRAINER ASSEMBLY

1	**804168**	CHECKSTOP STRAINER (COMPLETE ASSEMBLY)
2	**809815**	STOP BODY
3	**804170**	STOP BONNET
4	**809783**	REMOVABLE CHECK STOP SEAT
5	**804171**	CHECK STEM
6	**804172**	STOP STEM
7	**805349**	UNION NUT
8	**800973**	3/8" COPPER UNION ADAPTER
9	**800898**	UNION GASKET (PK OF 10)
10	**804173**	SPRING (PK OF 10)
11	**804175**	STRAINER
12	**809061**	O-RING (PK OF 10)
13	**801225**	O-RING
14	**805359**	O-RING (PK OF 10)

SLOTS TO BE USED AS WRENCH TO REMOVE CHECK STOP SEAT ITEM 4.

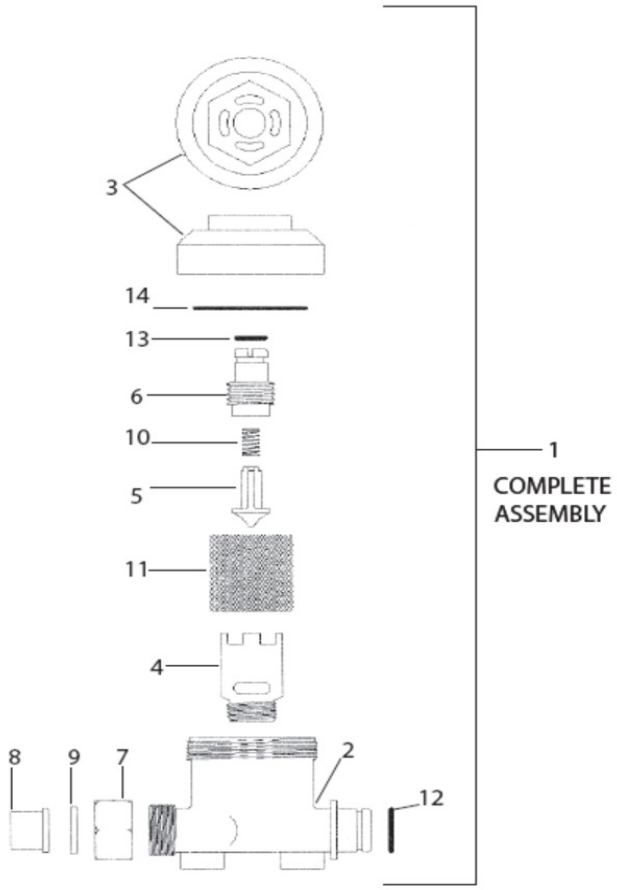

ACORN - PLASTIC AIR-CONTROL CHECK STOP ASSEMBLY

1	**804168**	CHECKSTOP STRAINER COMPLETE ASSEMBLY
2	**804170**	STOP BONNET
3	**805359**	O-RING (PK OF 10)
4	**801225**	O-RING
5	**804172**	STOP STEM
6	**804173**	SPRING (PK OF 10)
7	**804171**	CHECK STEM
8	**804175**	STRAINER
9	**804169**	STOP BODY ASSEMBLY
10	**809061**	O-RING (PK OF 10)
11	**812460**	#10 x 1/2" HX HEAD SELF TAPPING SCREW
12A	**412764**	1/2" NPS x 6-1/4" STN. STL. INLET HOSE
12B	**804713**	1/2" NPS x 15-3/4" STN. STL. INLET HOSE
12C	**412765**	1/2" NPS x 24" STN. STL. INLET HOSE
13	**2570-001-199**	M x F PLASTIC ELBOW
14	**0331-034-000**	SPACER WASHER
15	**0124-030-000**	#8 3/8" PAN HEAD SCREW
16	**804094**	O-RING (PK OF 10)

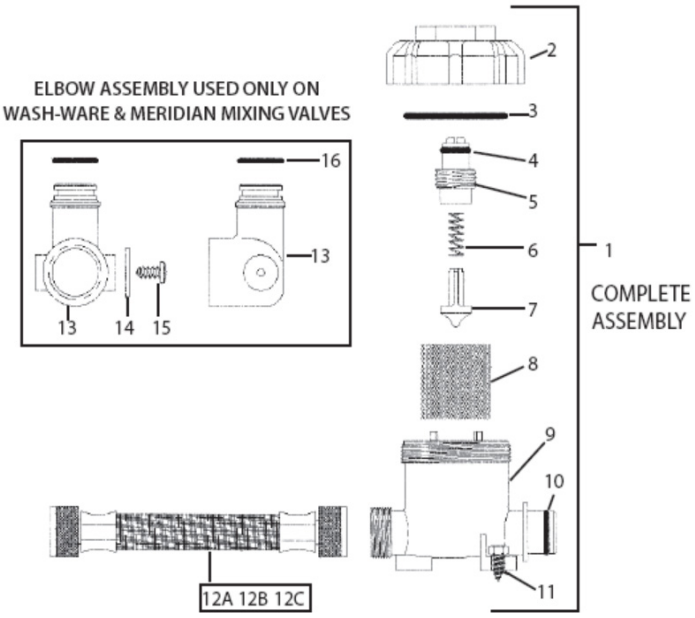

10

ACORN - PENAL-MATIC METERING CARTRIDGE

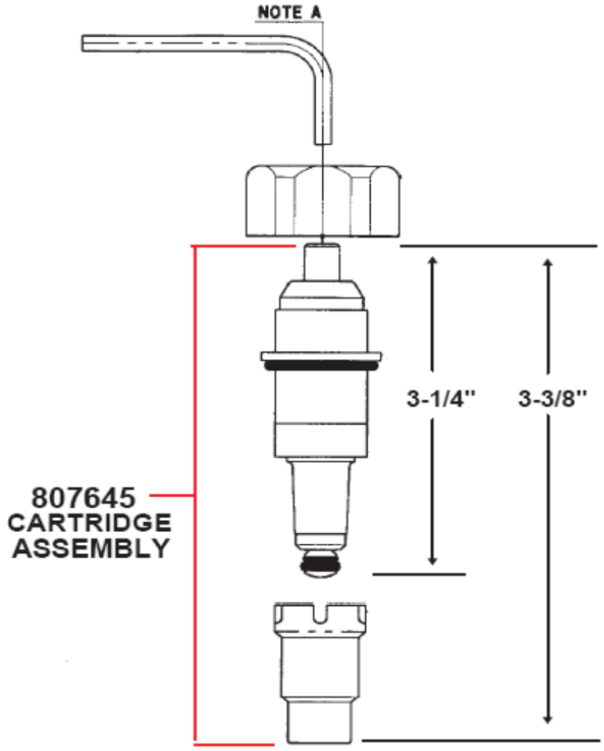

A-TIMING IS ADJUSTABLE FROM 5 TO 60 SECONDS AND IS ACCOMPLISHED BY INSERTING HEX WRENCH, ITEM #9, INTO THE HOLE IN THE STEM. TURNING THE NEEDLE CLOCKWISE INCREASES TIMING, COUNTERCLOCKWISE DECREASES TIMING. DO NOT ATTEMPT TO REMOVE THE TIMING NEEDLE, TO DO SO WILL VOID THE WARRANTY. CHANGES IN WATER PRESSURE AND/OR TEMPERATURE WILL AFRFECT TIMING AND MAY REQUIRE READJUSTMENT.

B- BONNET, ITEM #4, SHALL BE ASSEMBLED TO VALVE BODY WITH A MAX OF 35 FT./LBS. DO NOT OVERTIGHTEN.

ACORN - QUICK-CLOZ VALVE CARTRIDGE FOR PENAL-TROL VAVLE

A-CARTRIDGES SHALL BE ASSEMBLED TO VALVE BODIES WITH A MAX OF 35 FT/LBS. OF TORQUE. DO NOT OVERTIGHTEN.

NOTE: UNDER SOME OPERATING CONDITIONS THESE QUICK-CLOZ CARTRIDGES MAY CREATE WATERHAMMER, AND WHEN USED IN HOT AND COLD APPLICATIONS, IT IS DIFFICULT TO SIMULTANEOUSLY CONTROL AND UTILIZE THE BLENDED OUTLES STEAM. SHOULD THESE CONDITIONS EXIST, ACORN RECOMMENDS REPLACEMENT WITH PN 2302-020-001, WHICH ELIMANTES WATERHAMMER AND METERS, AS SET, UP TO ONE MINUTE.

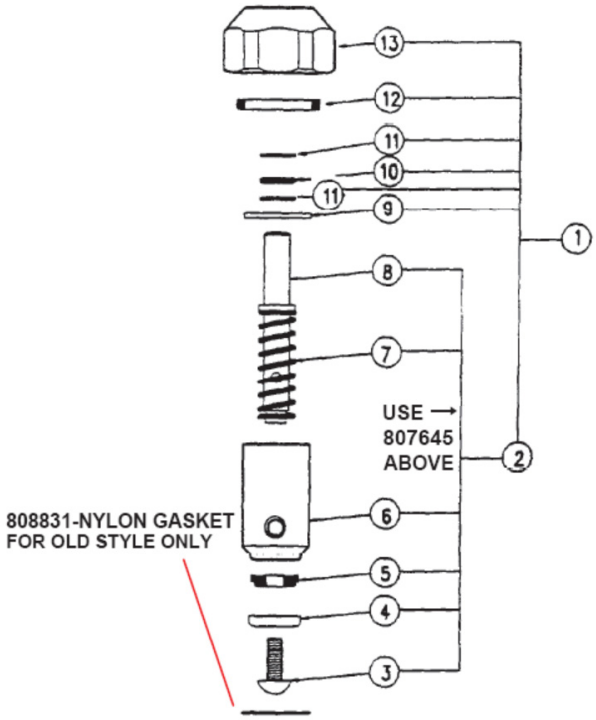

1	**803780**	CARTRIDGE ASSEMBLY-COMPLETE
2	**USE ABOVE**	CARTRIDGE ASSY.-LESS BONNET
3	**801508**	#10-32 X 1/2" LG. PHILLIPS
4	**803712**	DISC RETAINER
5	**807558**	GASKET DISC
6	**807306**	SLEEVE & SEAT
7	**807305**	SPRING
8	**807304**	ROD
9	**807559**	"O" RING RETAINER
10	**801574**	"O" RING
11	**808560**	BACK-UP RING (2 REQUIRED)
12	**807303**	BONNET GASKET
13	**807302**	BONNET

ACORN - VALVE BODY ASSEMBLY FOR PENAL-TROL VALVE

JANUARY 1976 TO PRESENT

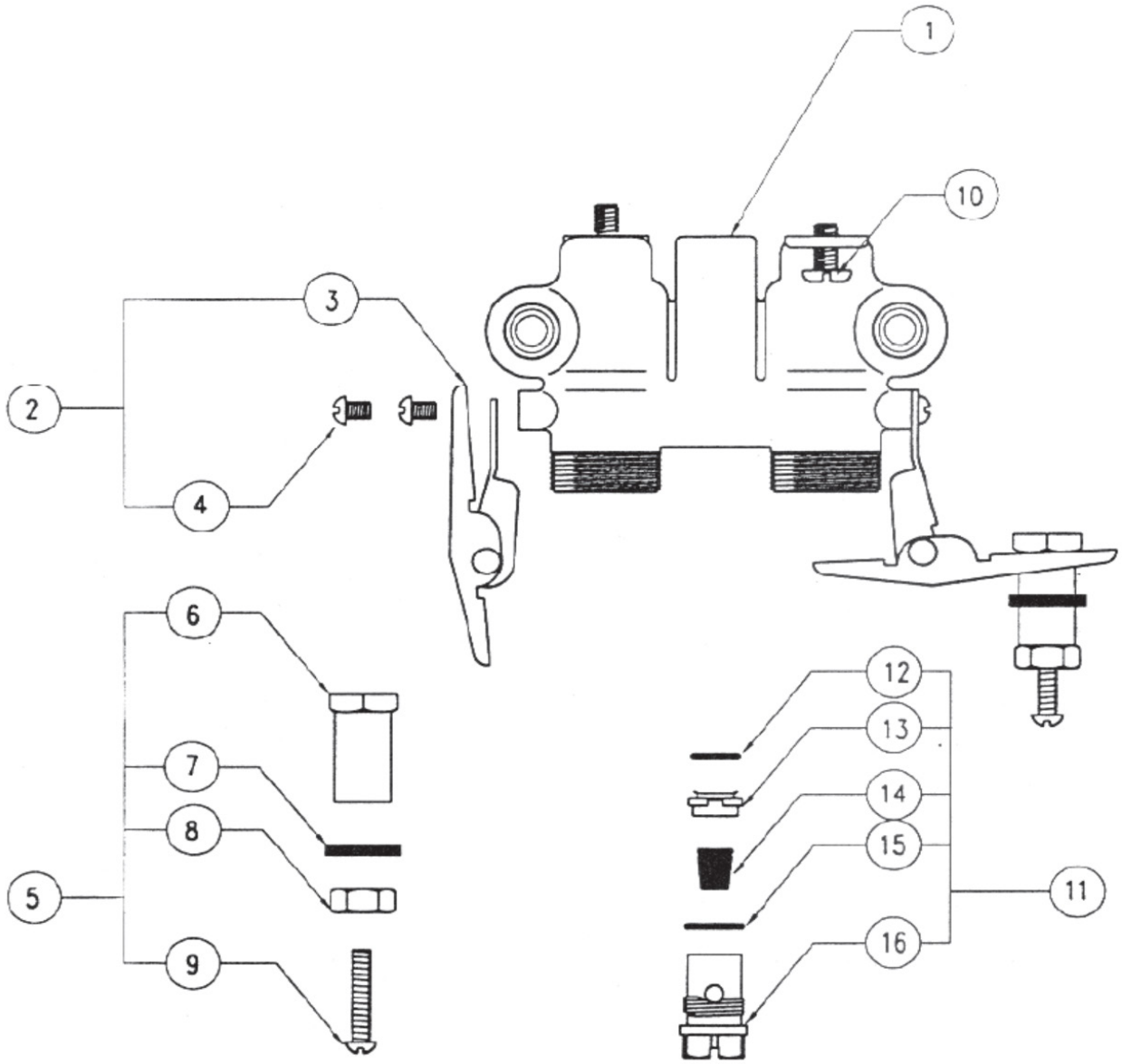

1	**2310-020-199**	VALVE BODY (3/8" NCT INLET)	10	**0126-004-000**	1/4"-20 x 3/8" LG. PANHEAD
2	**805333**	ROCKER/FULCRUM ASSEMBLY	11	**806697**	0.5GPM FLO-CONTROL ASSY
3	**2314-000-001**	ROCKER/FULCRUM SUB -ASSY	12	**804264**	O-RING
4	**0116-004-000**	#10-32 x 1/4" LG. RD. HEAD	13	**806187**	FLO-CONTROL RETAINER
5	**805625**	ADJUSTING CUP ASSEMBLY	14	**807230**	0.5GPM FLO-CONTROL
6	**000233**	ADJUSTING CUP	15	**804093**	O-RING
7	**2315-001-000**	ADJUSTING CUP RETAINER	16	**809074**	FLO-CONTROL PLUG
8	**0302-004-000**	#10-32 ADJ NUT	17	**2310-900-001**	VALVE ASSY. ITEMS 1 THRU 16
9	**0106-014-000**	#10-32 x 1" LG. RD. HEAD			

ACORN - PENAL-TROL STOP ASSEMBLIES

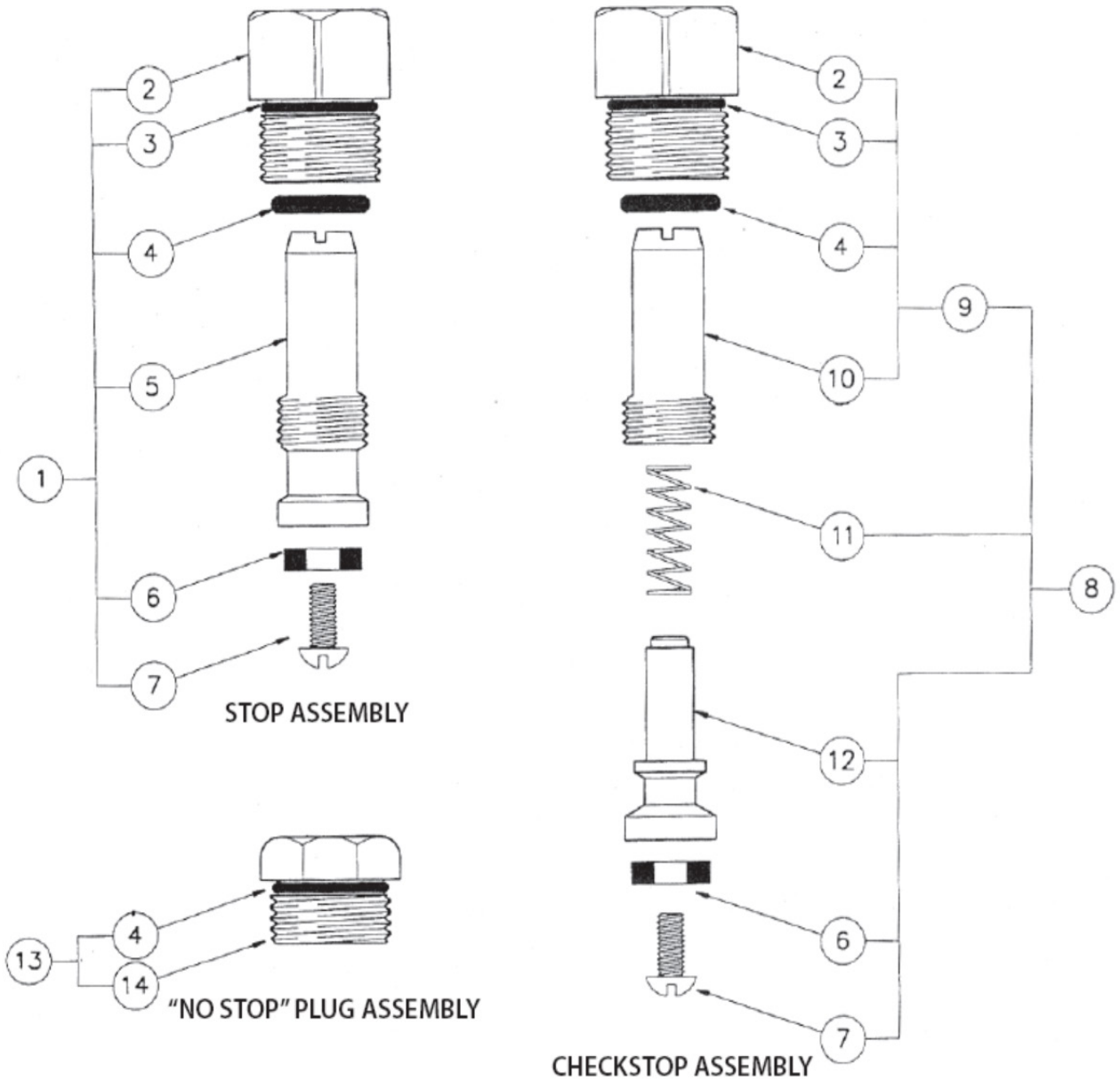

1	**803785**	STOP ASSEMBLY - COMPLETE	8	**806870**	CHECK STOP ASSEMBLY - COMPLETE
2	**801149**	STOP BODY	9	**806877**	CHECK STOP ASSEMBLY - LESS PLUNGER
3	**801577**	O-RING	10	**806798**	CHECK STOP STEM
4	**801220**	O-RING	11	**804173**	COMPRESSION SPRING
5	**806778**	STOP STEM	12	**806875**	CHECK STOP PLUNGER
6	**804759**	DISC	13	**806777**	"NO STOP" PLUG ASSEMBLY
7	**804753**	#8 - 32 x 3/8" LG. RD. HEAD	14	**801220**	PLUG

ACORN - HOT & COLD PENAL TIME-TROL FIXTURE

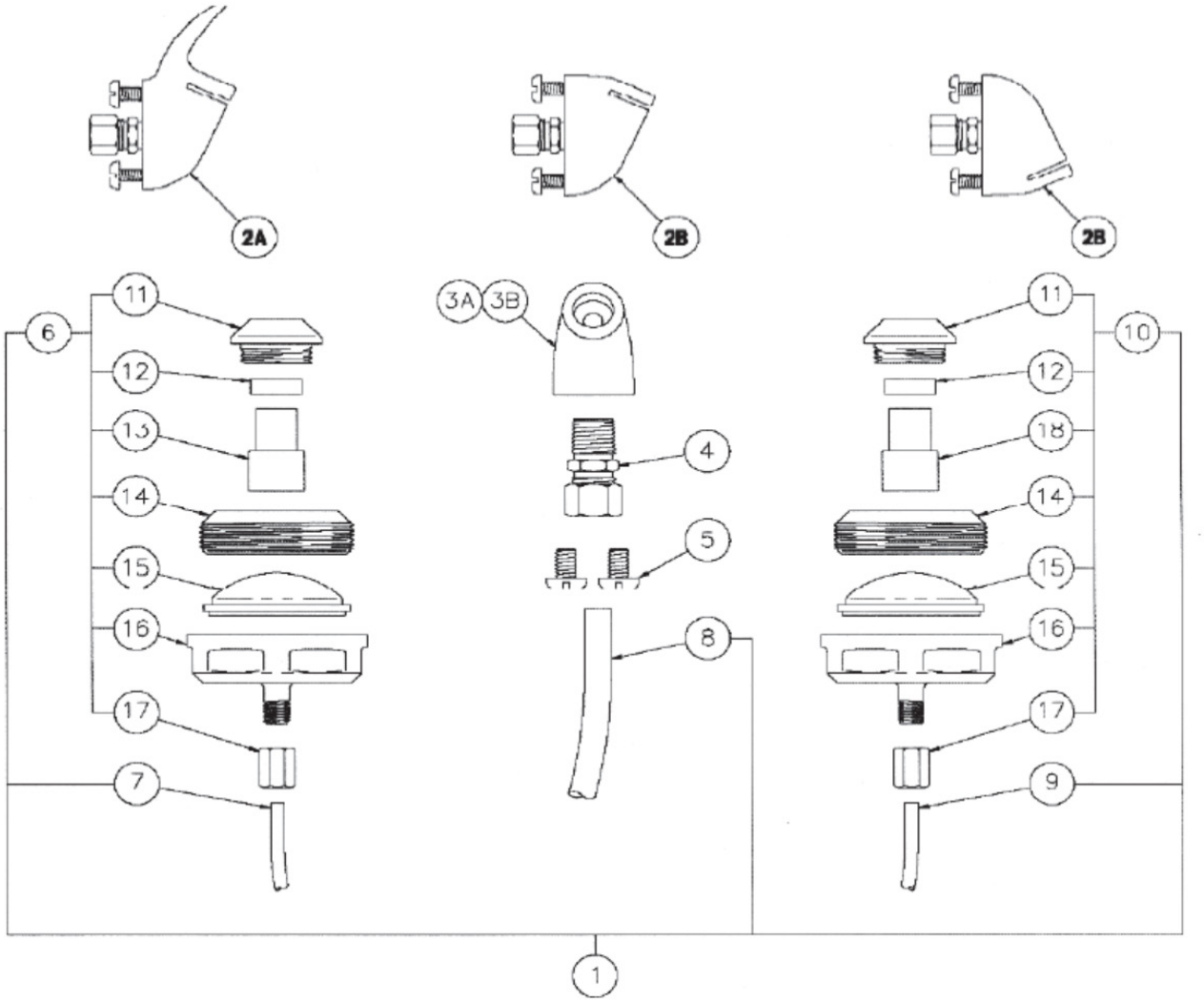

1	**4016-010-01**	H&C - MVC2 TIME-TROL PUSH BUTTON ASSEMBLY	9	**2155-010-199**	1/8” OD x 10ft PE PLUMBING
2A	**000866**	BUBBLER W/ MOUTHGUARD HARDWARE PACKAGE	10	**2566-067-001**	COLD - MVC2 PUSHBUTTON ASSEMBLY
2B	**000173**	PENAL FILLER/BUBBLER HARDWARE PACKAGE	11	**806709**	ESCUTCHEON
3	**4025-000-199**	BUBBLER W/ MOUTHGUARD	12	**2566-099-199**	PUSHBUTTON SPACER
3A	**4025-001-199**	PENAL FILLER/BUBBLER	13	**000869**	HOT PUSHBUTTON
4	**809733**	1/4” TUBE x 1/4” NPT COMPRESSION FIT-TING	14	**2566-022-000**	ESCUTCHEON RETAINER
5	**0126-004-000**	1/4-20 x 3/8” PAN HEAD SCREW	15	**807456**	DIAPHRAGM
6	**2566-066-001**	HOT - MVC2 PUSHBUTTON ASSEMBLY	16	**804296**	DIAPHRAGM RETAINER
7	**2153-010-199**	1/8” OD x 10ft PE TUBING - RED	17	**1895-450-000**	1/8” FERRULE NUT
8	**2160-010-199**	l1/4” od X 10FT PE TUBING - CLEAR	18	**2566-027-000**	COLD PUSHBUTTON

ACORN - CHECKSTOP STRAINER - 804168

1	**804168**	CHECKSTOP STRAINER (COMPLETE ASSEMBLY
2	**809815**	STOP BODY
3	**804170**	STOP BONNET
4	**809783**	REMOVABLE CHECKSTOP SEAT
5	**804171**	CHECK STEM
6	**804172**	STOP STEM
7	**805349**	UNION NUT
8	**800973**	3/8" COPPER UNION ADAPTER
9	**0431-014-000**	UNION GASKET
10	**2415-002-000**	SPRING
11	**807175**	STRAINER
12	**0401-016-000**	O-RING
13	**0401-012-000**	O-RING
14	**0401-129-000**	O-RING

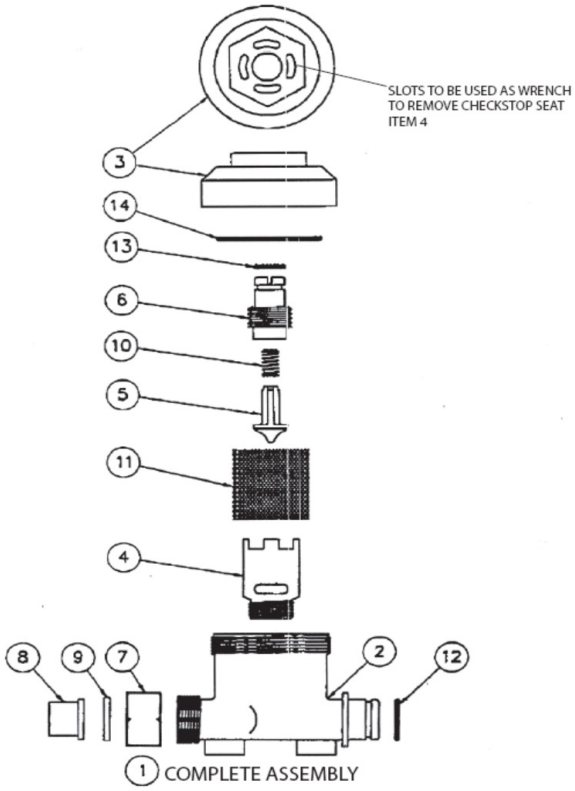

ACORN - REPAIR PARTS

3-1/2”
002907 - HOT VALVE UNIT
000819 - COLD VALVE UNIT

CONTROL ASSEMBLY LONG - 6”
805731 - HOT
805732 - COLD

CONTROL ASSEMBLY SHORT - 4-3/4”
805734 - HOT
805735 - COLD

807024 -VALVE HANDLE

RH ACORN STEM
6-1/8”
804978 - HOT/COLD

RH ACORN STEM
3-3/8”
805100 - HOT/COLD

VALVE STEM UNIT
2-5/8”
807702

METERING CARTRIDGE
3-3/8”
807645 - LESS PUSH BUTTON
807596 - WITH PUSH BUTTON
807645G - LESS PUSH BUTTON GENERIC

PENAL-TROL STOP UNIT
1-7/8”
803785

QUICK CLOSE CARTRIDGE 2-1/2”
809167 -OEM ACORN
803780 -GENERIC
942650 -REPAIR KIT

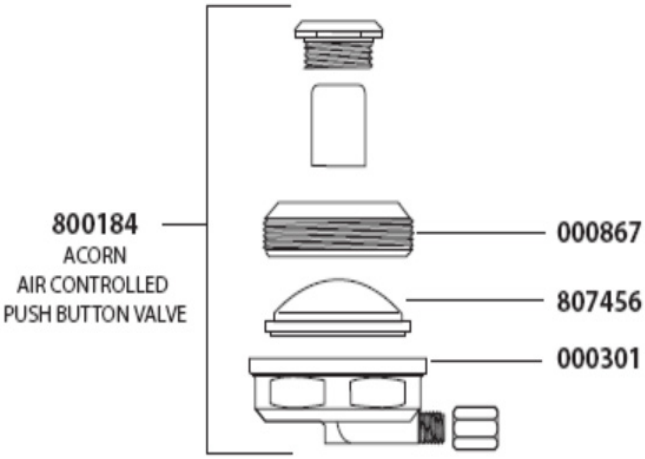

ACORN - REPAIR PARTS

AIR-TROL VALVE UNIT MOUNTED ON S.S. BRACKET WITH STOPS AND SUPPLY LINES

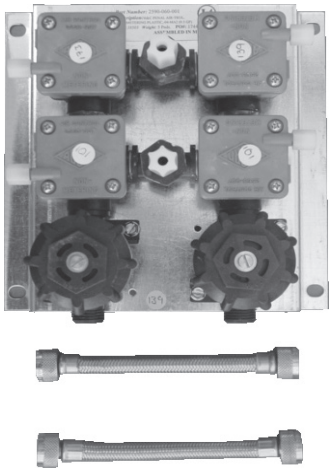

603609 - SINGLE TEMP METERING, 0.5 GPM
809981 - SINGLE TEMP METERING 2.5 GPM
1 CELL
609554 - NON-METERING 0.5 GPM
609024 - NON-METERING 2.5 GPM
609994 - METERING 0.5 GPM
609025 - METERING 2.5 GPM
805394 - METERING 2.5 GPM FOR -FA
2 CELL
807860 - SINGLE TEMP 2.5 GPM
603358 - NON-METERING 0.5 GPM
807037 - METERING 0.5 GPM
3 CELL
810325 - NON-METERING 0.5 GPM
605218 - METERING 0.5 GPM
4 CELL
807035 - METERING 0.5 GPM

HOT & COLD VALVE BODY COMPLETE- .5 GPM

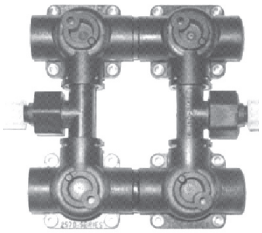

800989

PUSH BUTTON ASSEMBLY

000268 - COLD
000269 - HOT

CHECK-STOP STRAINER UNIT COMPLETE

804168

FLOW CONTROL INSERT (SOLD IN PK OF 10)

OEM	GENERIC
805285- 0.4 GPM	807230 - 0.5 GPM
806712- 0.7 GPM	807231 - 0.7 GPM
806713- 1.0 GPM	807232 - 1.0 GPM
806715- 1.4 GPM	807233 - 2.2 GPM
	807234 - 2.5 GPM

SCREEN STRAINER

804175

TUBING FOR AIR-TROL VALVES - 100 FT. ROLLS

402002 - 1/8" RED
402003 - 1/8" BLUE
402006 - 1/8" CLEAR
402001 - 1/4" BLACK
402008 - 1/4" CLEAR
402036 - 3/8" BLUE

ADAPTER

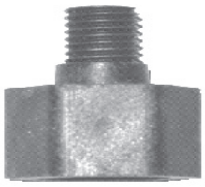

801736

SERVO MOTOR UNIT

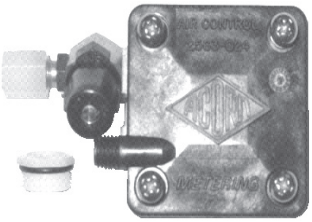

802212- METERING

SERVO MOTOR UNIT

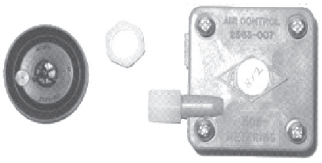

804298 - NON-METERING

DIAPHRAGM UNIT

804163- OEM ACORN
808974- GENERIC

BODY UNIT FOR AIR-TROL VALVES

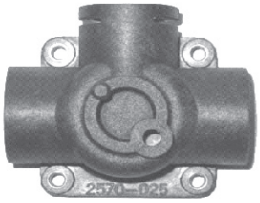

809124 - RIGHT HAND ONLY
809125 - LEFT HAND ONLY
801734 - STRAIGHT CONNECTOR W/ OUTLET

10

AMERICAN STANDARD NEW STYLE
BED PAN CLEANSER (MODEL NUMBERS 7582.067, 7836.018, 7866.015, 7880.024, 7880.083, 7880.091)
WALL MOUNTED SUPPLIES

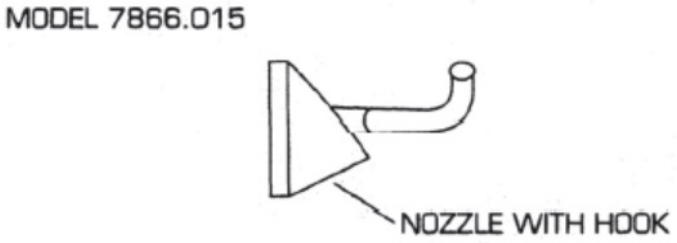

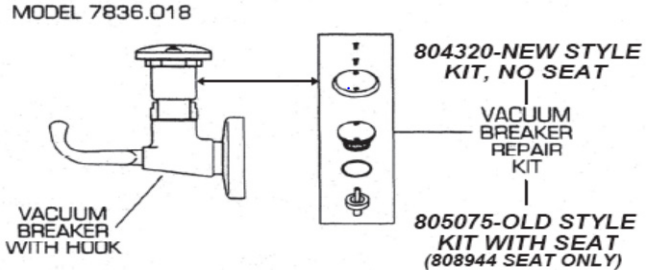

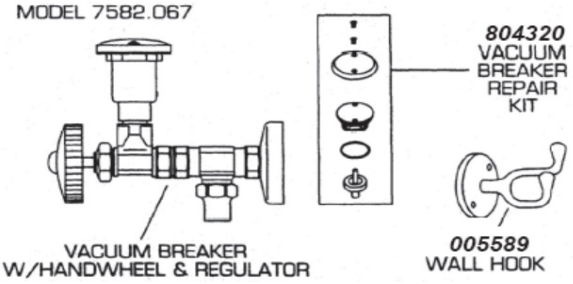

606654-COMPLETE SQUEEZE SPRAY UNIT W/HOSE
808331-COMPLETE PLAIN UNIT W/HOSE
(NOT SHOWN)

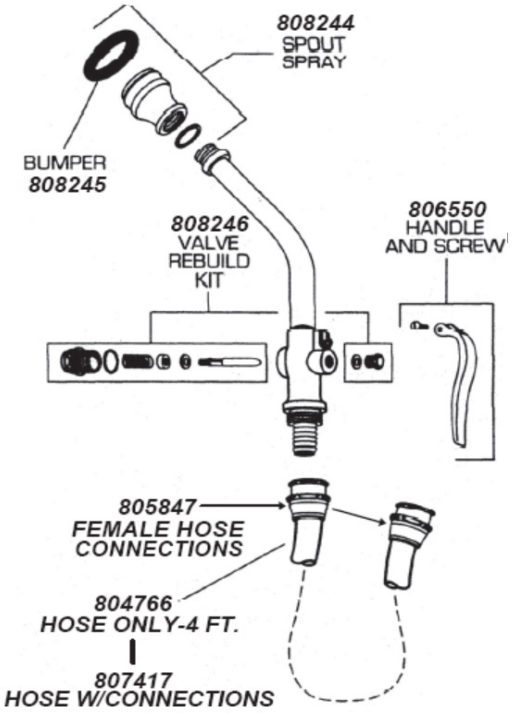

AMERICAN STANDARD - PRISON LAVATORY FITTING
(MODEL NUMBERS 0431, 0421, 2250, & 2251 SERIES)

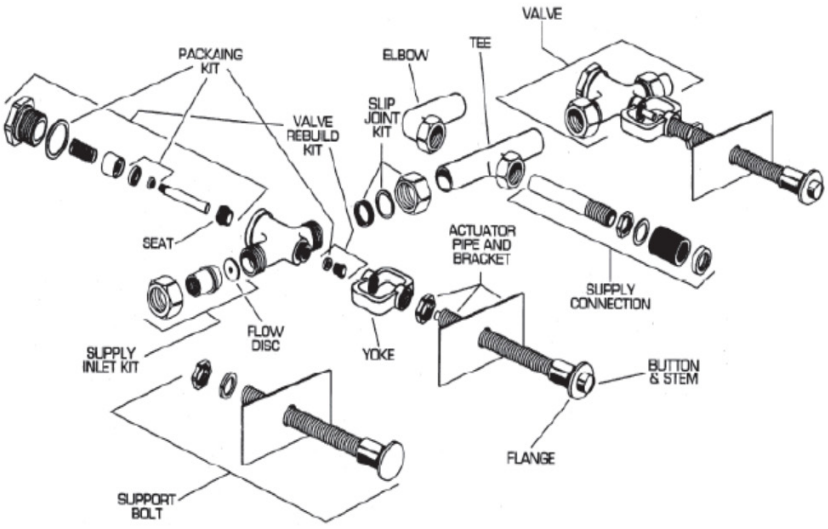

808824	BUTTON & STEM - COLD (0”-4”)
809218	BUTTON & STEM - HOT (0” - 4”)
809219	BUTTON & STEM - COLD (4” - 9”)
809220	BUTTON & STEM - HOT (4” - 9”)
809224	FLANGE
809230	ACTUATOR PIPE AND BRACKET (0”- 4”)
809231	ACTUATOR PIPE AND BRACKET (4” - 9”)
DISC	SUPPORT BOLT (0” - 4”)
DISC	SUPPORT BOLT (4” - 9”)
809232	YOKE
807769	VALVE REBUILD KIT
808779	SEAT
809233	FLOW DISC
809234	SUPPLY INLET KIT
808557	SLIP JOINT KIT
809239	VALVE
809246	TEE
DISC	ELBOW
809253	SUPPLY CONNECTION (0” - 4”)
808558	SUPPLY CONNECTION (4” - 9”)
801056	PACKING KIT

AMERICAN STANDARD - SERVICE SINK FAUCETS

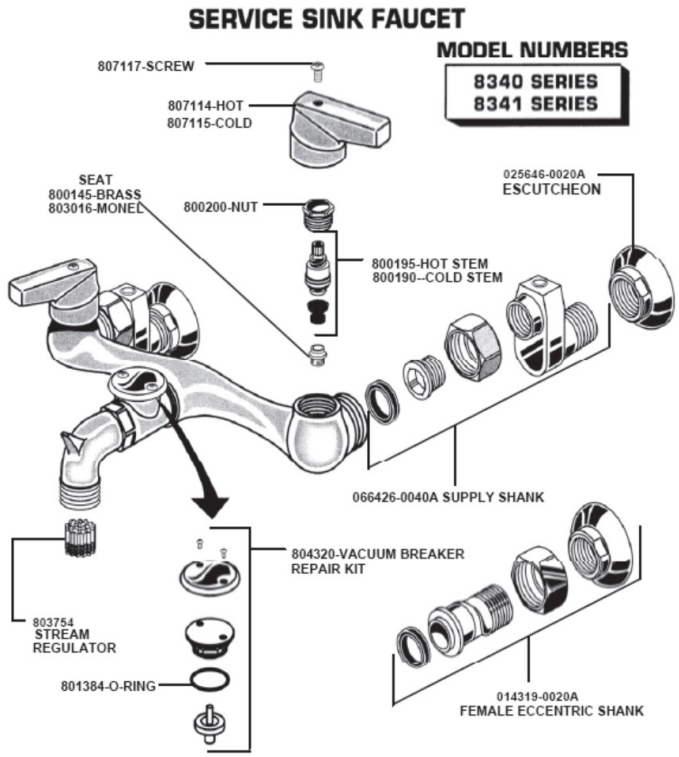

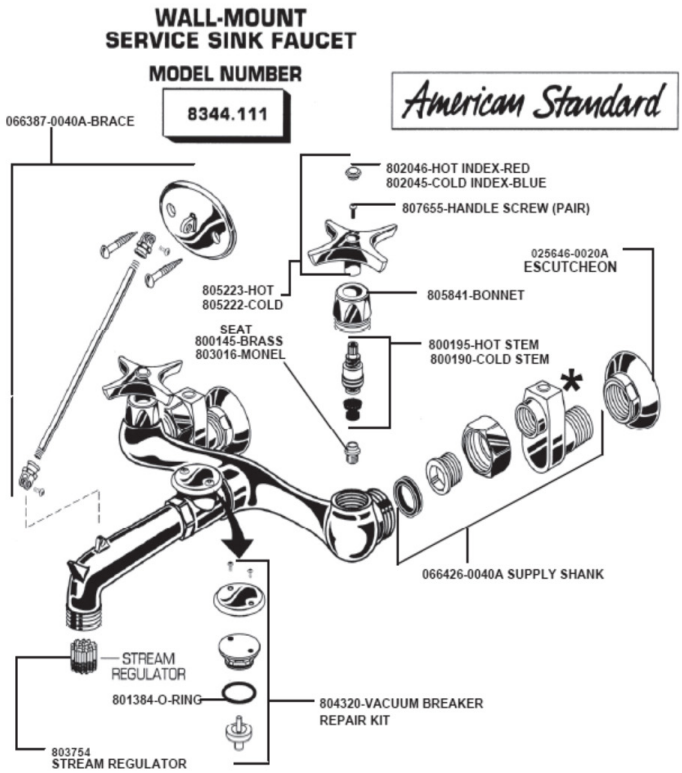

* 807775-THREE PIECE STOP REBUILD KIT

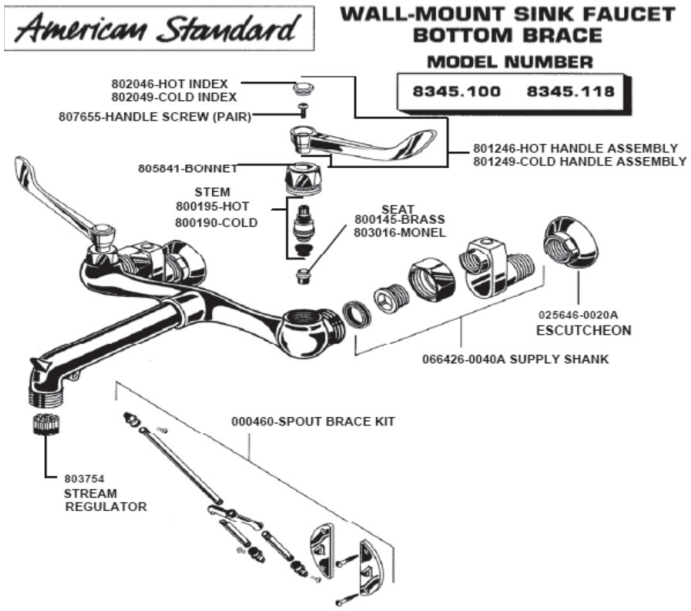

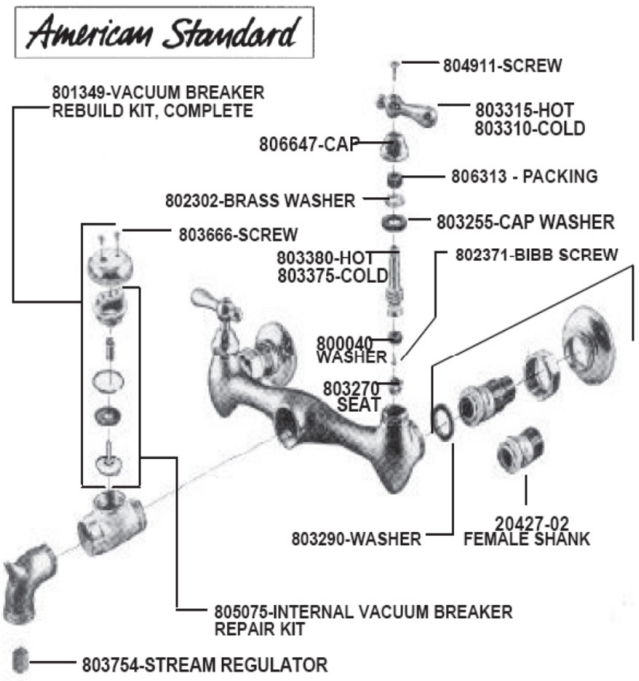

10

AMERICAN STANDARD- WIDE SPREAD LAVATORY FAUCET W/ FLEX CONNECTIONS

MODEL SERIES - 4800, 4801, 4802, 7092, 7830, & 7831

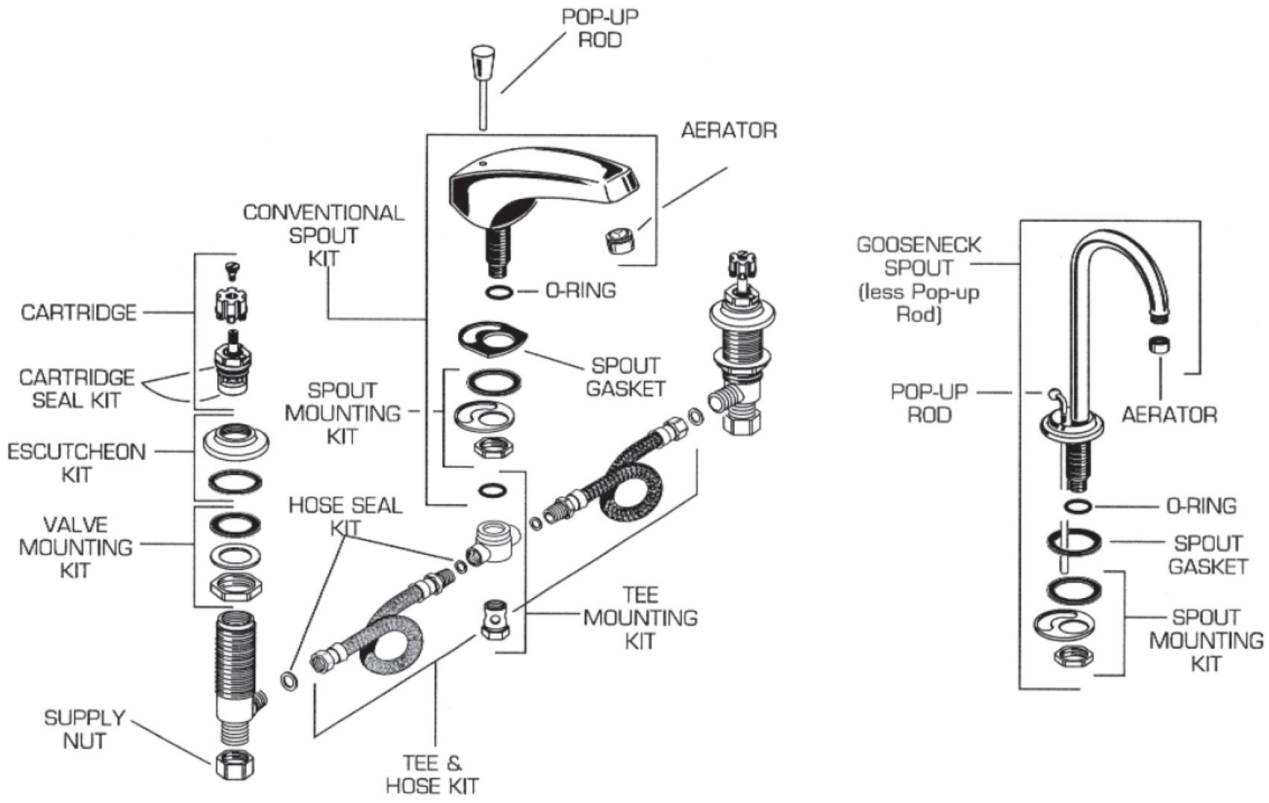

REPAIR PARTS	DESCRIPTION	PART NUMBER	QTY
SPOUTS	CONVENTIONAL SPOUT (LESS DRAIN)	**012684**	1
	CONVENTIONAL SPOUT (WITH DRAIN)	**012683**	1
	GOOSENECK SPOUT (LESS DRAIN)	**807507**	1
	GOOSENECK SPOUT (WITH DRAIN)	**012128**	1
FAUCET PARTS	CARTRIDGE	**028610**	1
	CARTRIDGE SEAL KIT	**804471**	1
	HOSE SEAL KIT(6 PIECES)	**033759**	1 SET
	VALVE MOUNTING KIT	**030258**	1
	ESCUTEON KIT	**030257**	1
	TEE MOUNTING KIT "F"	**806373**	1
	TEE & HOSE KIT	**401891**	1 SET
	SUPPLY NUY (BRASS)	**024220-0070**	2
	*O-RING	**810232**	1
	SPOUT MOUNTING KIT	**030256-0070**	1
	AERATOR (CONVENTIONAL SPOUT)	**066070**	1
	AERATOR (GOOSENECK SPOUT)	**066108**	1
	SPOUT GASKET (CONVENTIONAL SPOUT)	**028757-0070**	1
	SPOUT GASKET (GOOSENECK SPOUT)	**012669**	1
	POP-UP ROD (CONVENTIONAL SPOUT)	**028617**	1
	POP-UP ROD (GOOSENECK SPOUT)	**012086**	1

AMERICAN STANDARD- CENTERSET LAVATORY FAUCET

MODEL SERIES - 5400, 5401, 5402, 7400, 7401, & 7402

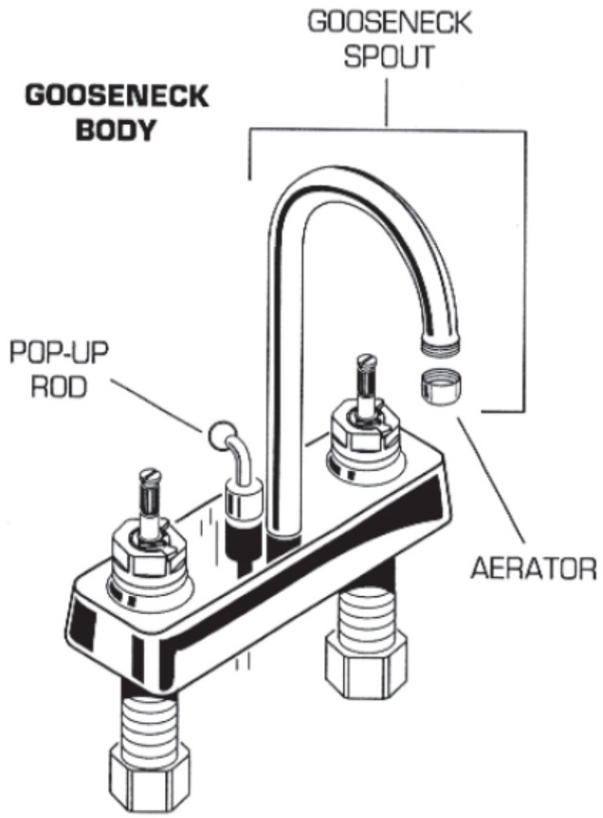

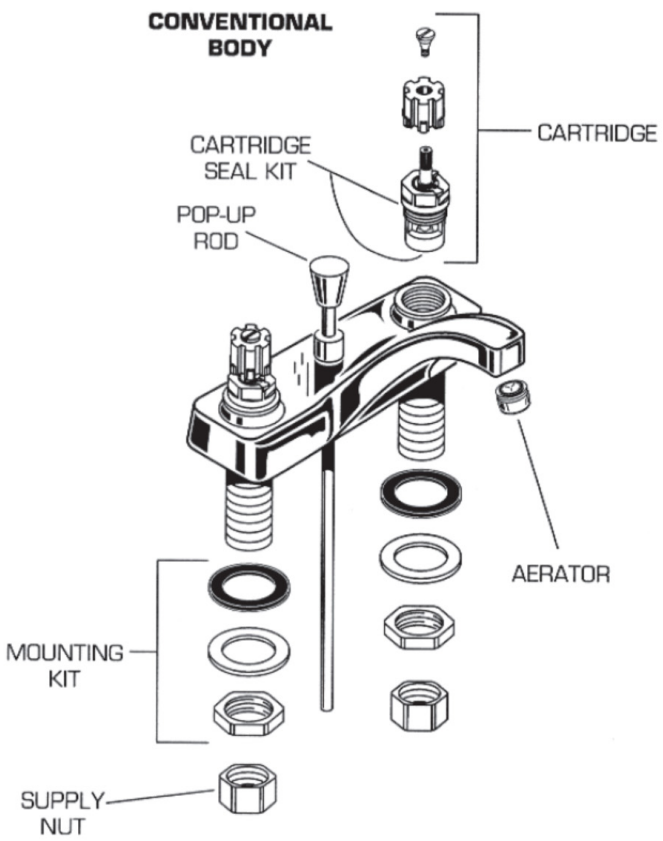

FAUCET PARTS	DESCRIPTION	PART #	QTY
	CARTRIDGE	**028610-0070A**	1
	CARTRIDGE SEAL KIT	**804471**	1
	MOUNTING KIT	**030255-0070A**	2 SETS
	SUPPLY NUT (BRASS)	**024220-0070A**	2
	AERATOR (CONVENTIONAL)	**066070**	1
	AERATOR (GOOSENECK)	**066108**	1
	POP-UP ROD	**028617**	1
	POP-UP ROD (GOOSENECK)	**012086**	1
	GOOSENECK SPOUT	**060281**	1

AMERICAN STANDARD- ULTRA-MIX PRESSURE BALANCING BATH & SHOWER SET MODEL NUMBERS (1363.024, 1363.082, 1363.167, 1363.047, 1363.096, 1363.172, 1363.065, 1363.103, 1363.077, 1363.119

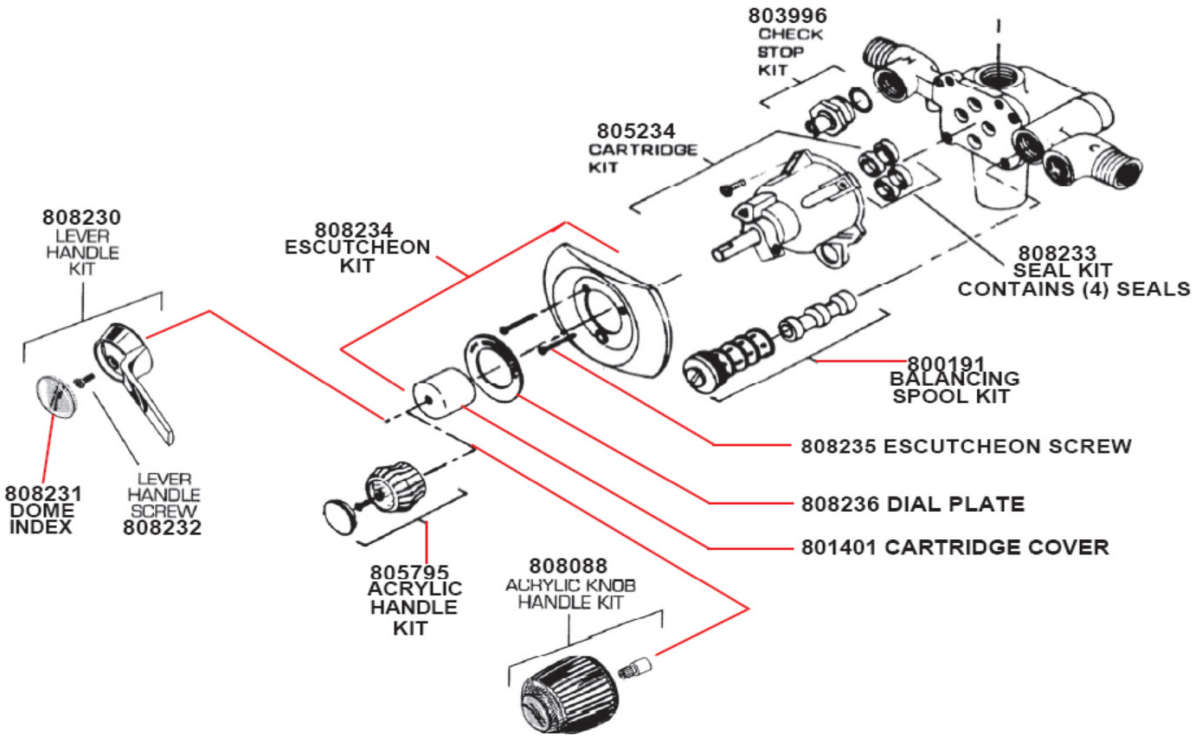

AMERAMERICN STANDARD- RELIANT CENTERSET LAVATORY FAUCET (NEW STYLE)

MODEL NUMBER

2385.130	2385.263	2385.357
2385.131	2385.274	2385.395
2385.135	2385.275	2385.439
2385.138	2385.278	2385.445
2385.145	2385.290	2385.448
2385.157	2385.295	2385.449
2385.163	2385.297	2385.457
2385.178	2385.300	2385.463
2385.200	2385.315	2385.464
2385.215	2385.332	2385.474
2385.246	2385.335	2385.475
2385.249	2385.349	2385.478
2385.257		2385.479

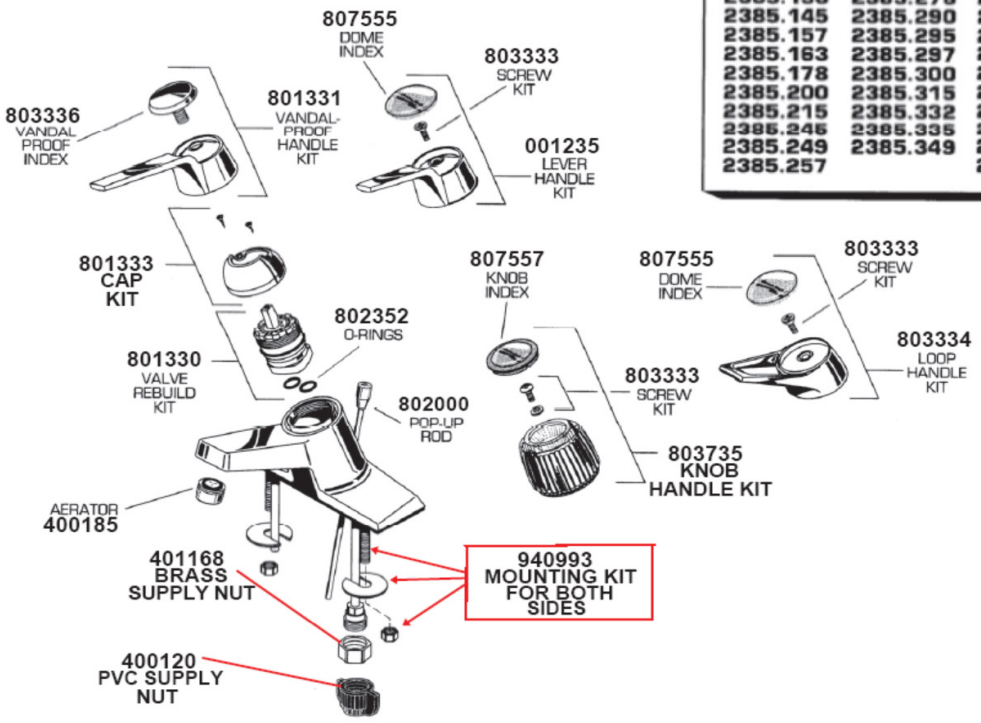

10

BRADLEY - TOUCH 'N-FLO SHOWERVALVE REPAIR PARTS

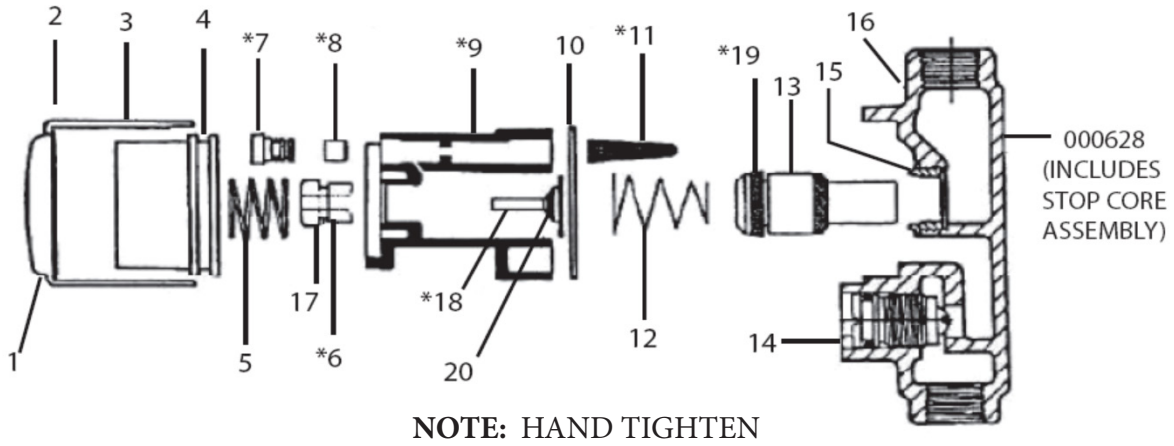

NOTE: HAND TIGHTEN

NOTE: LUBRICATE THE U-CUP ON THE PLUNGER WITH LUBRICANT (PART # S45-125). **DO NOT USE SPRAY SILICONE!** FOR NORMAL OPERATION, ITEM 14(INTERNAL STOP CORE) SHOULD BE TURNED OUT UNTIL FLUSH WITH THE VALVE BODY. FOR SEAT WRNECH, ORDER PART NUMBER 807123 OR USE SQUARE STOCK.

1	**806183**	PUSH BUTTON
2	**806184**	COVER - 1-5/8" LONG
3	**803231**	COVER - (INDIVI. ONLY) 2-3/4" LONG
4	**803232**	SPACER (INDIVID ONLY)
5	**806951**	SPRING
*6	**803233**	GUIDE
*7	**807326**	SCREW ASSEMBLY
*8	**807496**	TIMING CARTRIDGE (NOT ADJUSTABLE)
*9	**807325**	BODY
10	**807110**	GASKET
*11	**807499**	FILTER
12	**807498**	CONICAL SPRING
13	**809129**	PISTON ASSEMBLY
14	**807109**	INTERNAL STOP CORE
15	**807111**	SEAL (ASSEMBLE WITH TEFLON DOPE)
16	**000569**	BOTTOM BODY
17	**801781**	O-RING
*18	**807497**	POPPET ASSEMBLY
*19	**125-076**	U-CUP
20	**125-001EF**	O-RING

NOTE: ITEM #6 INCLUDES 807781 O-RING
ITEM #14 INCLUDES 125-078 CUP WASHER
ITEM #19 INCLUDES 125-001EF O-RING

THE TOUCH'N-FLO VALVE USES A FIXED ORIFICE TIMING CARTRIDGE. CYCLE TIMES CANNOT BE MANUALLY ADJUSTED OTHER THAN BY CHANGING CARTRIDGES. THE TABLE BELOW LISTS THE CYCLE TIMES AT 75PSIG FOR THE VARIOUS CARTRIDGES AVAILABLE

TIMING CARTRIDGE	CYCLE TIME RANGE (SECONDS)	
S88-039A (GREEN O-RING)	20-35	35-45
S88-039 (BLACK O-RING)*	35-50	45-65
S88-039C (BROWN O-RING)	50-70	60-80
*STANDARD		EU

ADDITIONAL REPAIR KITS

KIT **#806182** INCLUDES

S88-039- TIMING CARTRIDGE
807498- CONICAL SPRING
807110- GASKET
807499- FILTER
809129- PISTON ASSEMBLY
S45-125-GREASE

KIT **#809120** INCLUDES

800063-BODY ASSEMBLY KIT
807498- CONICAL SPRING
809129- PISTON ASSEMBLY
S45-125-GREASE

10

BRADLEY - EQUA-FLO PRESSURE-BALANCING SHOWER VALVE

NOTE: **SHOULD THE ROTOR COME OFF THE STEM, ALIGN GROOVE IN SPLINE ON THE STEM WHEN REASSEMBLING. ALSO, IF YOU SHOULD WISH TO REVERSE HOT FOR COLD AND COLD FOR HOT DUE TO INSTALL ERROR, OR BACK TO BACK INSTALLATION YOU CAN REASSEMBLE ROTOR 180 DEGREES AGAINST STEM AND VALVES WILL WORK PROPLERLY.**

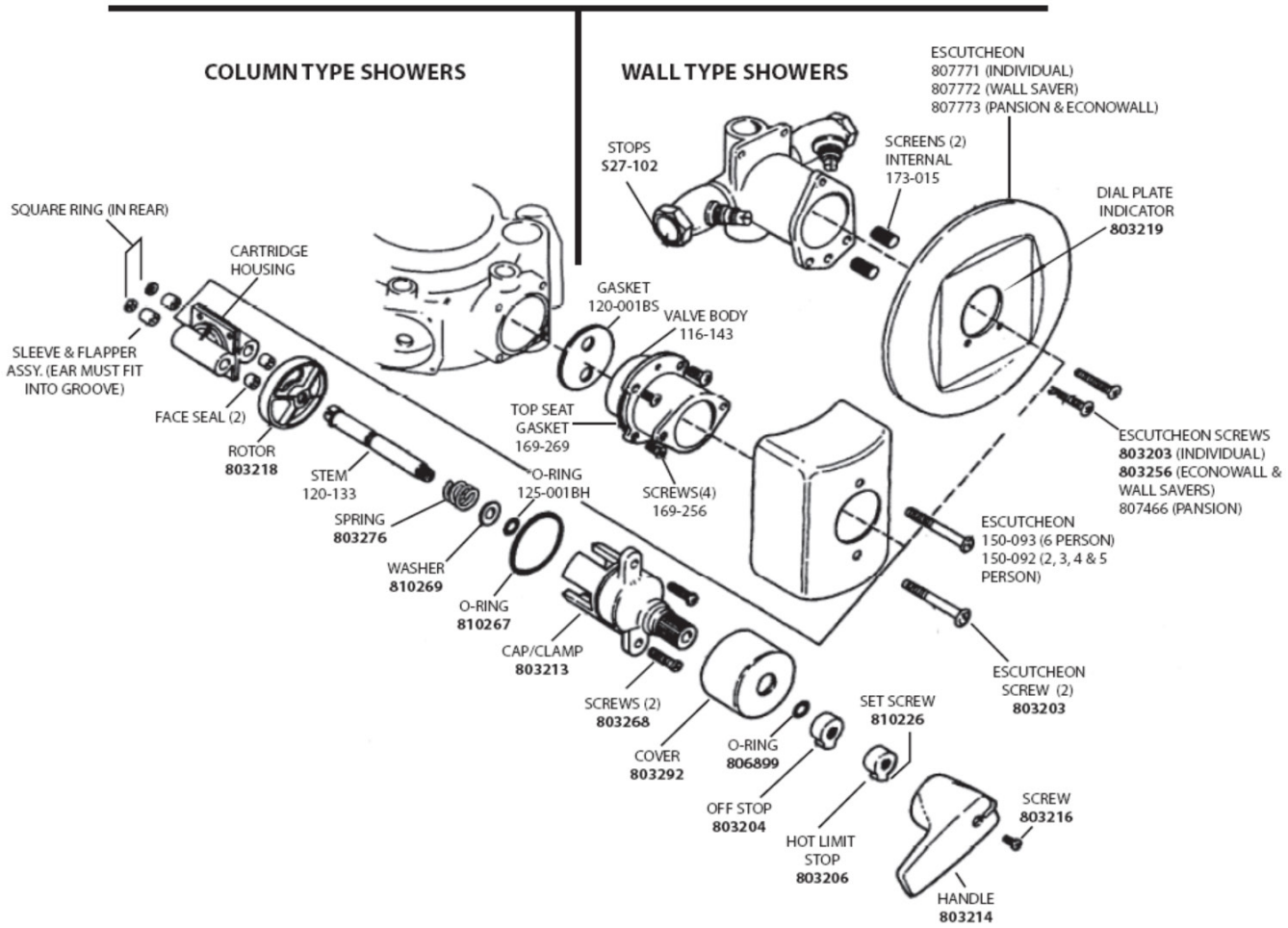

GASKET REPAIR KIT - **803211**
KIT INCLUDES:

(2) 125-055	SQUARE RING
(1) 801268	O-RING
(1) 801267	O-RING
(2) 125-081	DOUBLE-FACE SEAL
(1) 806899	O-RING

STEM ASSEMBLY KIT - **803217**
INCLUDES:

(1) 120-133	STEM
(1) 803276	SPRING
(1) 810269	WASHER
(1) 810267	WASHER
(1) 125-001BH	O-RING

CARTRIDGE ASSEMBLY - **803212**
KIT INCLUDES:

(2) S55-009	SLEEVE & FLAPPER
(2) 125-081	DOUBLE-FACE SEAL
(2) 125-055	SQUARE RING
(1) 118-145	CARTRIDGE HOUSING

COMPLETE COLUMN VALVE REPLACEMENT:

S65-075 FOR 2-5 PERSON
S65-076 FOR 6 PERSON

O-RING LUBE - **700006**

Valves are equipped with a temperature limit stop which can be used to limit the temperature of tempered water dischargd. To adjust the temperature, remove the handle and loosen the set screw. Remove the limit stop and reposition to desired setting. Turn the limit stop clockwise hor a hotter setting and counterclockwise for a cooler setting.

NOTE: When replacing the double face seals, lubricate the top face with a small ammount of lubricant. When assmebling cap into valve body, use lubricant on O-Ring 810267 to prevent twisting of O-Ring.

CENTRAL BRASS

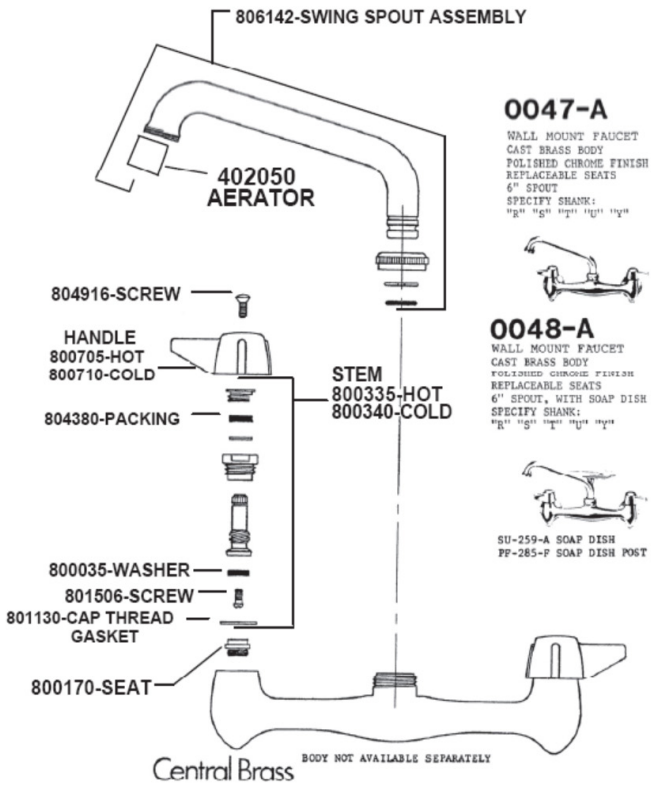

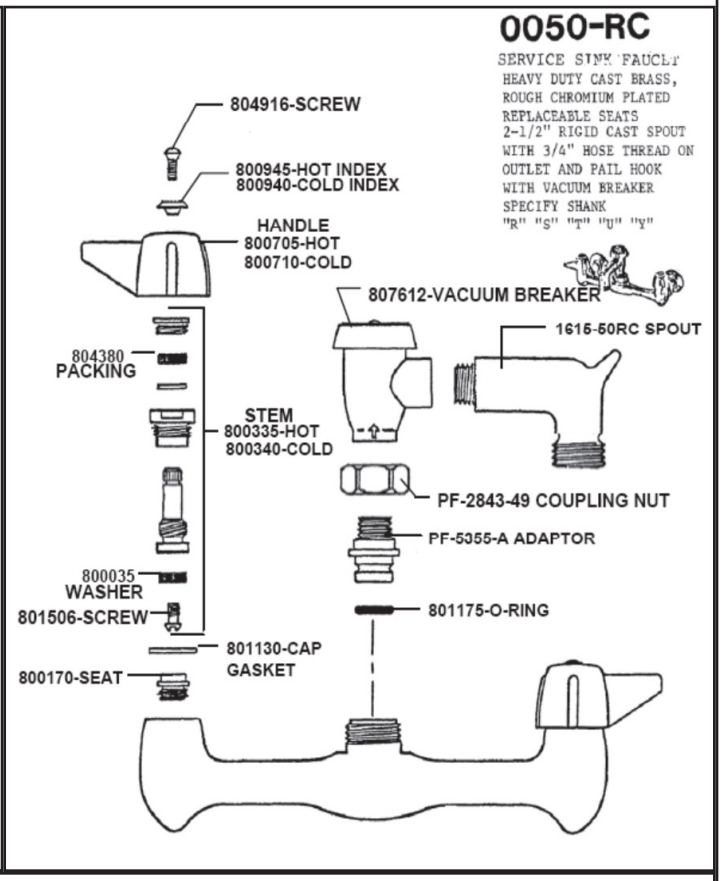

*SLOW-CLOSING FAUCETS

EACH FAUCET PICTURED USES SAME CARTRIDGE ASSEMBLIES AND PARTS SHOWN

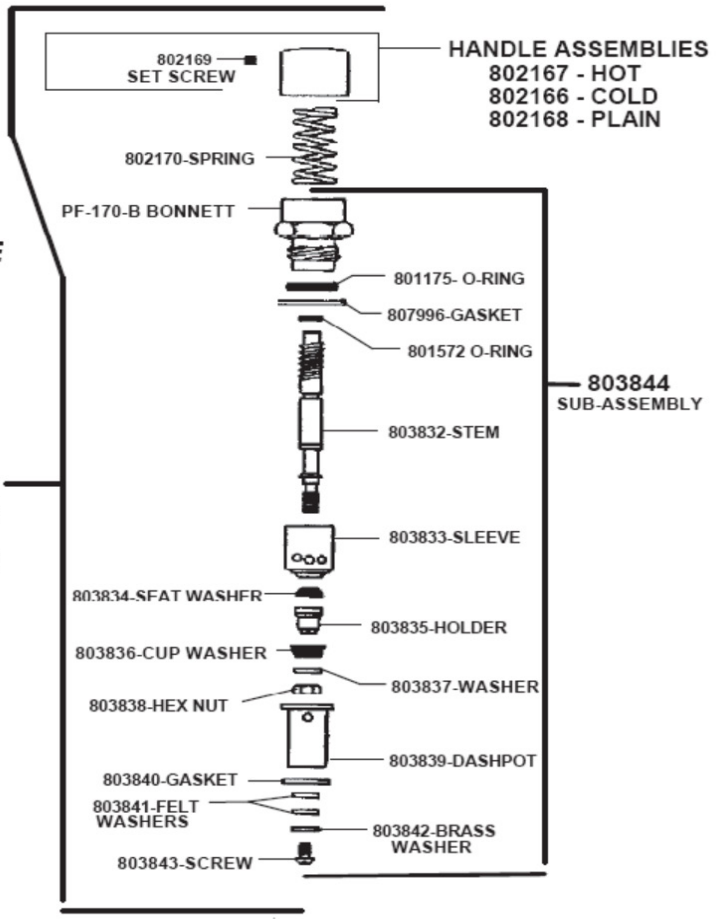

10

CENTRAL BRASS

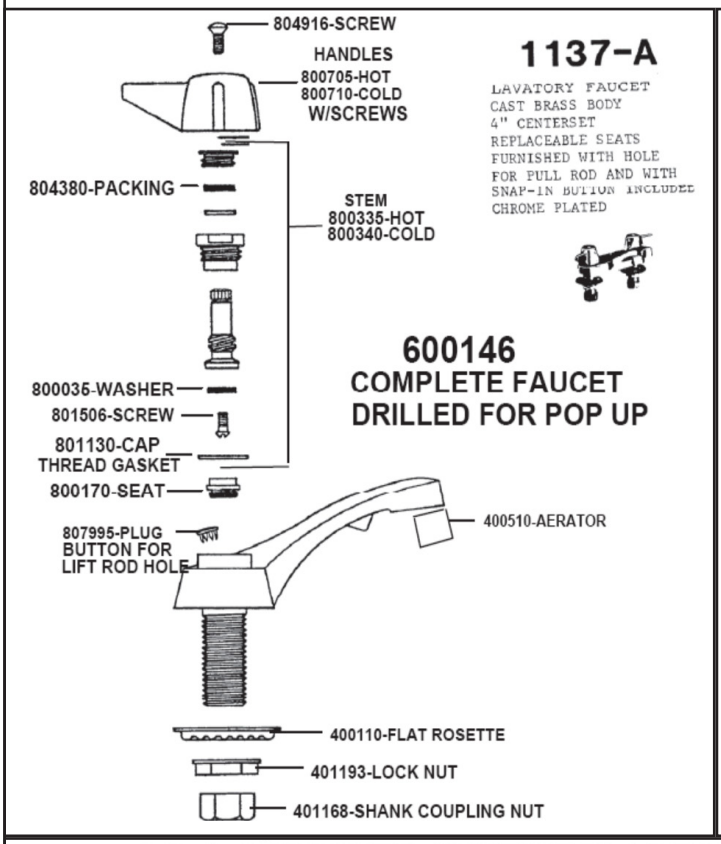

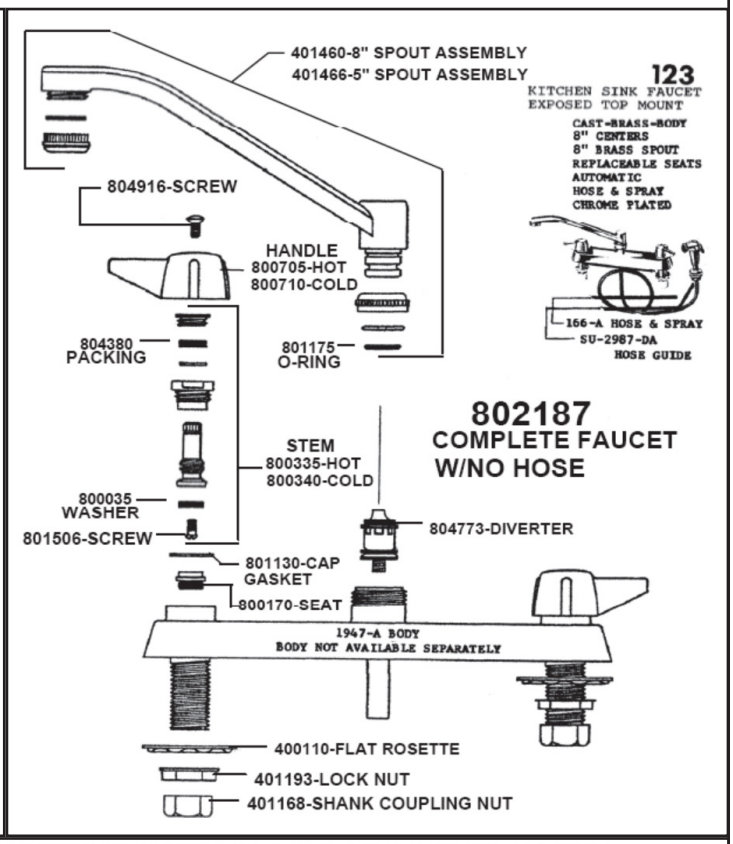

A.D.A. APPROVED 4" WRIST BLADE HANDLE OPTION FOR ABOVE FAUCETS

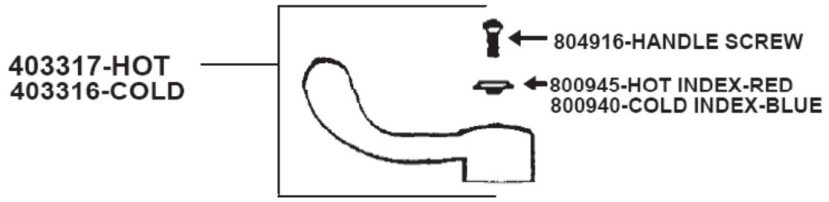

CENTRAL BRASS THREE-VALVE SHOWER VALVE

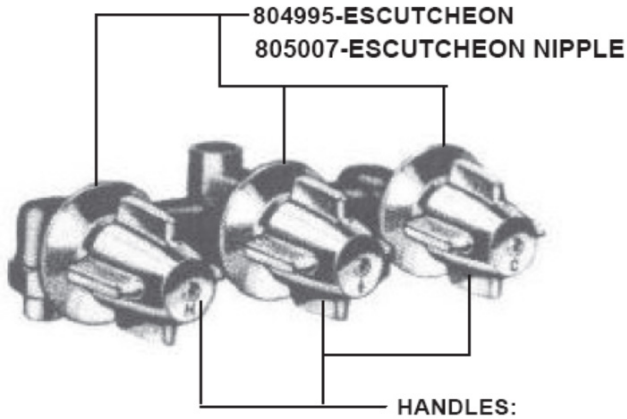

STEMS (NOT PICTURED):
800345-HOT/COLD STEM
802134-DIVERTER STEM

CENTRAL BRASS

POP-UP DRAIN UNIT-COMPLETE W/METAL VALDAL PROOF STOPPER-C.P. BRASS BALL ROD NUT-LIFT RODS-17GA.-TAILPIECE

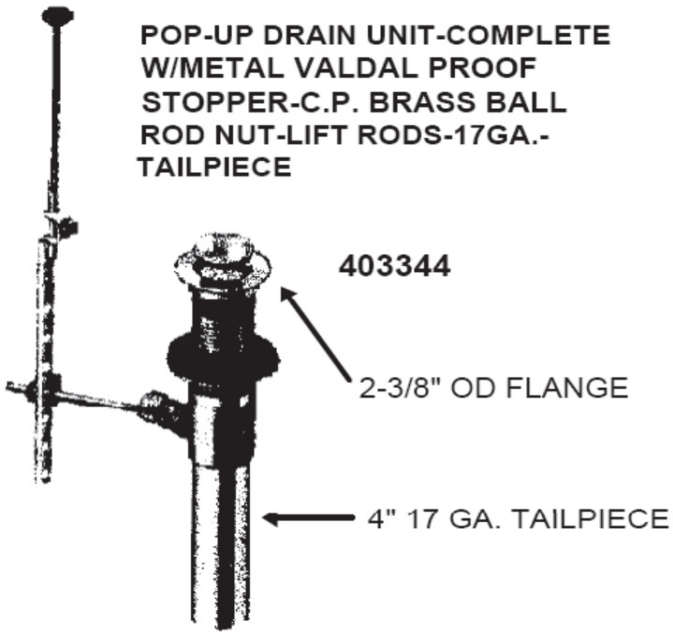

CHICAGO FAUCET SWING SPOUTS

*STANDARDIZED INLET FAUCET BODY CONNECTION
*INTERCHANGEABLE WITH ANY BODY REGULARLY FURNISHED WITH ANY OF THESE SPOUTS
*SWINGING FAUCET BODY CONNECTION
*E3 AERATOR, 2.0 GPM @ 80 PSI UNLESS OTHERWISE NOTED

HA8

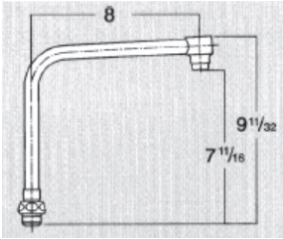

*High rise double bend spout
*Swing only
*Polished chrome plate
*E12 aerator, 2.0 GPM @ 80 PSI

808146

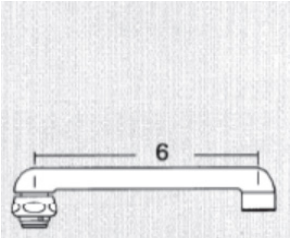

*Polished chrome plate
*Available in rough chrome plate with 3/4" hose thread outlet
*E3 aerator, 2.0 GPM @ 80 PSI

DB6

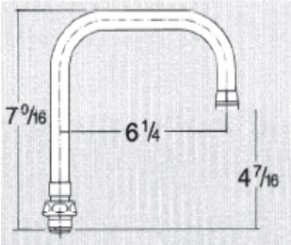

*Double bend spout
*Plain end
*Polished chrome plate
*No aerator

DB6A

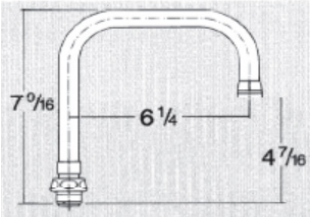

*Double bend spout
*"A" spout end
*Swing only
*Polished chrome plate
*No aerator furnished

000862

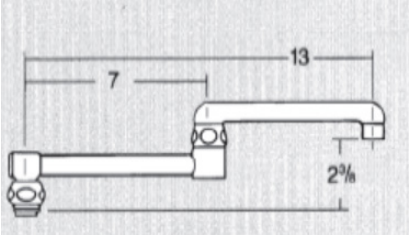

*Double jointed spout
*Polished chrome plate
*Available in rough chrome plate w/ 3/4" hose thread outlet
*E3 aerator, 2.0 GPM @ 80 PSI

DJ18

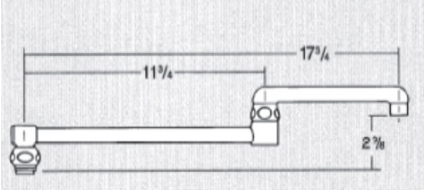

*Double jointed spout
*Polished chrome plate
*Available in rough chrome plate w/ 3/4" hose thread outlet
*E3 aerator, 2.0 GPM @ 80 PSI

L6

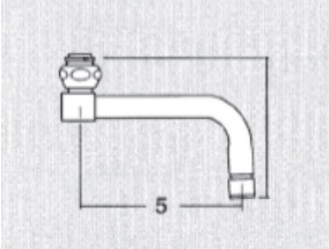

*Top inlet and bottome outlet
*Polished chrome plate
*Available in rough chrome plate w/ 3/4" hose thread outlet
*E3 aerator, 2.0 GPM @ 80 PSI

L8

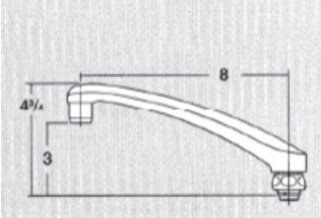

*Polished chrome plate only
*E3 aerator, 2.0 GPM @ 80 PSI

803065

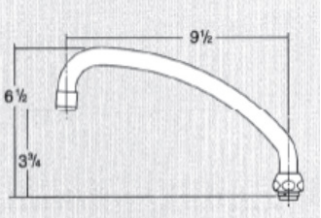

*Polished chrome plate only
*E3 aerator, 2.0 GPM @ 80 PSI

803055

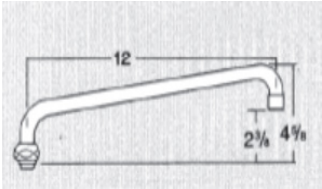

*Polished chrome plate only
*E3 aerator, 2.0 GPM @ 80 PSI

803060

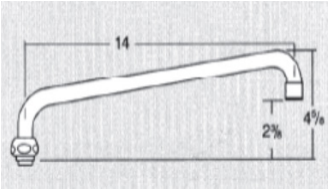

*Polished chrome plate only
*E3 aerator, 2.0 GPM @ 80 PSI

CAST BRASS SWING SOPUT W/ VACUUM BREAKER AND 3/4" MALE HOSE THREAD OUTLET

809741

801991 - VACUUM BREAKER REPAIR KIT ONLY

806226 - VACUUM BREAKER CAP

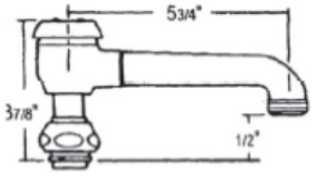

SPOUT ADAPTORS FOR CHICAGO

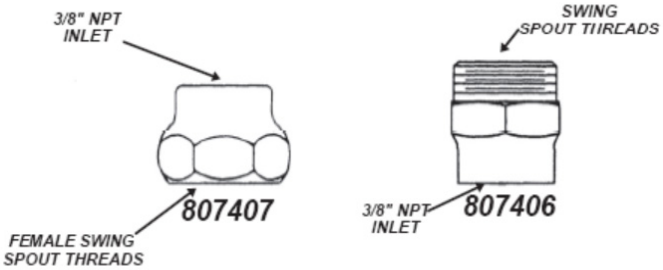

10

CHICAGO FAUCETS

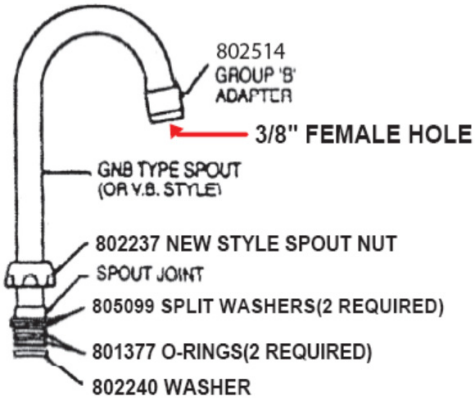

NOTE: GROUP "A" SPOUTS HAVE MALE THREADS AT SPOUT OUTLET (SEE NOTES BELOW)
1. TO GET A STANDARD THREADED 15/16 FEMALE AERATOR TO ADAPT TO A GROUP "A" CHICAGO FAUCET SPOUT W/MALE THREADS, USE A 404715 ADAPTOR.
2. TO GET A STANDARD THREADED 15/16 FEMALE AERATOR TO ADAPT TO A GROUP "B" CHICAGO FAUCET SPOUT WITH 3/8" IPS THREADS, USE A 406997 ADAPTOR.'
NOTE: THIS DRAWING APPLIES TO ALL CHICAGO SPOUTS OF THIS TYPE FOR EITHER RIGID OR SWING USE.
TO THE INSTALLER:
THIS SPOUT CAN BE USED AS A RIGID OR SWING SPOUT.
1. FOR RIGID SPOUTS, REMOVE 1/8" THICK 340-004 PLASTIC WASHER AND PLACE IN SPOUT BASE. DISCARD (2) 50-036 PLASTIC SPLIT WASHERS AS SHOWN, BUT DISCARD 340-004 WAHSER, PLACE SPOUT IN BASE, RAISE SPOUT NUT AND ADD (2) 50-036 PLASTIC SPLIT WASHERS LOWER NUT AND TIGHTEN.

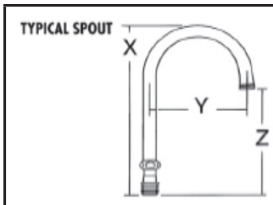

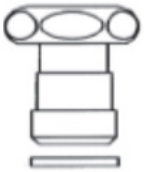

SPOUT NUMBER	PLAIN	GROUP "A"	GROUP "B"	RIGID/SWING			RIGID ONLY*			SWING ONLY*		
				X	Y	Z	X	Y	Z	X	Y	Z
GN1	X			8-1/4"	3-1/2"	5-7/8"						
804962		X		8-1/4"	3-1/2"	5-7/8"						
GN1B			X	8-1/4"	3-1/2"	5-3/8"						
GN2	X			9-3/4"	5-3/8"	6-1/8"						
803090		X		9-3/4"	5-3/8"	6-1/8"						
803095			X	9-3/4"	5-3/8"	5-5/8"						
GN8	X			11-1/4"	8"	6-1/8"						
807705		X		11-1/4"	8"	6-1/8"						
804805			X	11-1/4"	8"	5-5/8"						
GN10A		X					12-3/8"	10"	5-7/8"	13-3/8"	10"	6-7/8"
GN10B			X				12-3/8"	10"	5-7/8"	13-3/8"	10"	6-7/8"
GN12A		X					13-3/8"	12"	5-7/8"	14-3/8"	12"	6-7/8"
GN12B			X				13-3/8"	12"	5-7/8"	14-3/8"	12"	6-7/8"
GN2AH8		X		8"	5-3/8"	4-3/8"						
GN2BH8			X	8"	5-3/8"	4-1/4"						
GN2AH13		X		13"	5-3/8"	9-1/2"						
GN2BH13			X	13"	5-3/8"	9"						
GN2AH17		X		17"	5-3/8"	13-3/8"						
GN2BH17			X	17"	5-3/8"	12-7/8"						
*RIGID/SWING FIELD CONVERSION NOT AVAILABLE												

CHICAGO FAUCETS

600140 - COMPLETE FAUCET

QUATURN CENTERSET LAVATORY FAUCET WITH 804962 RIGID/SWING CONVERSION GOOSENECK SPOUT, 401778 SOFTFLO AERATOR AND 4" WRISTBLADE HANDLES

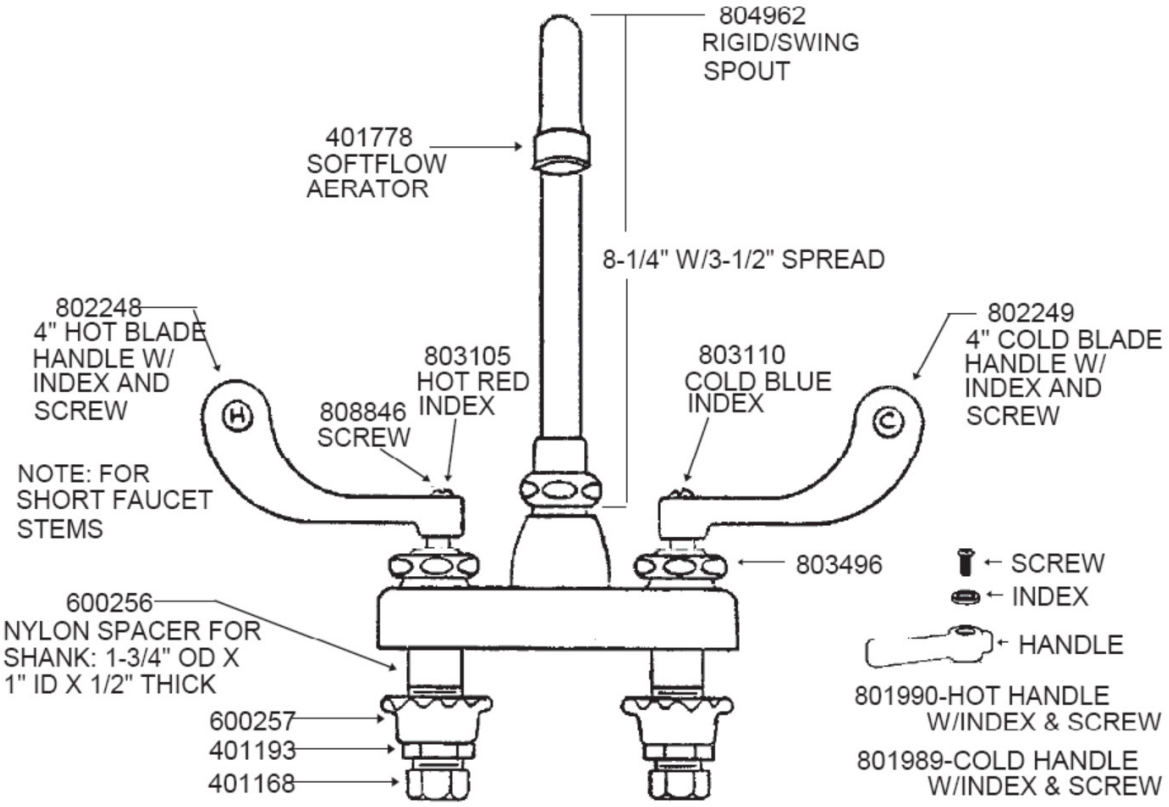

CHICAGO FAUCET 4" CENTER FAUCETS (STANDARD & METERING)

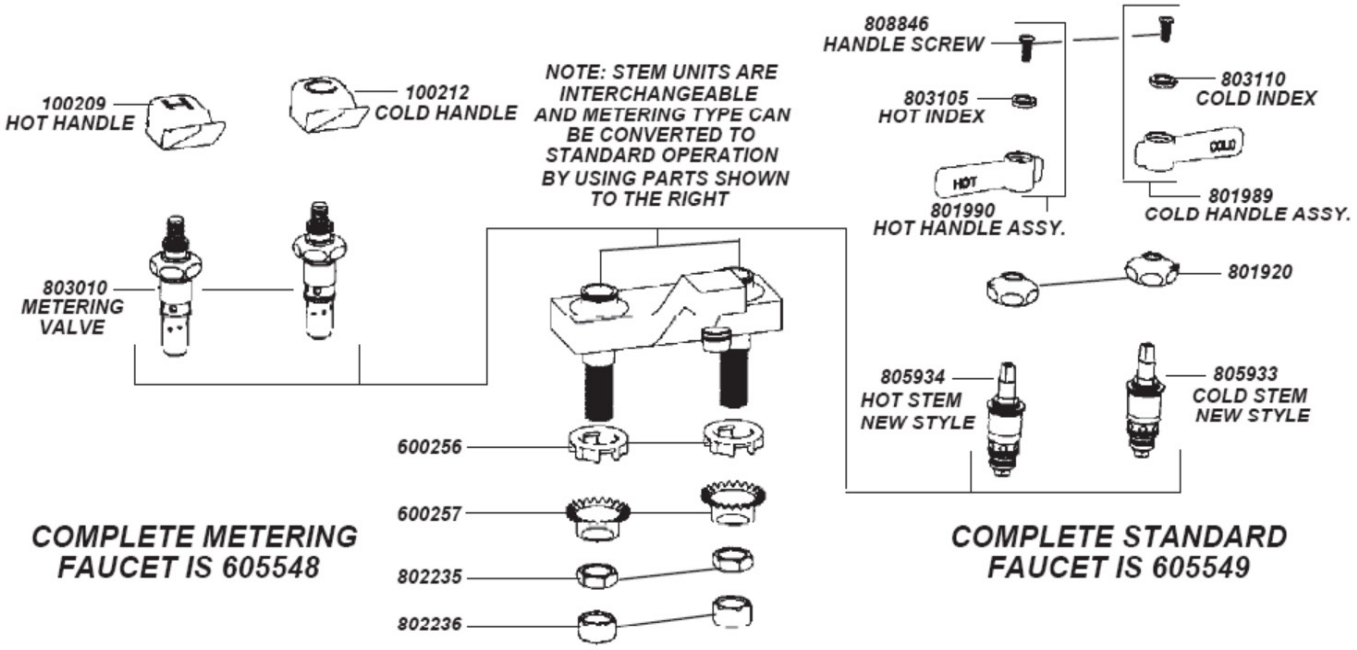

10

CHICAGO FAUCETS

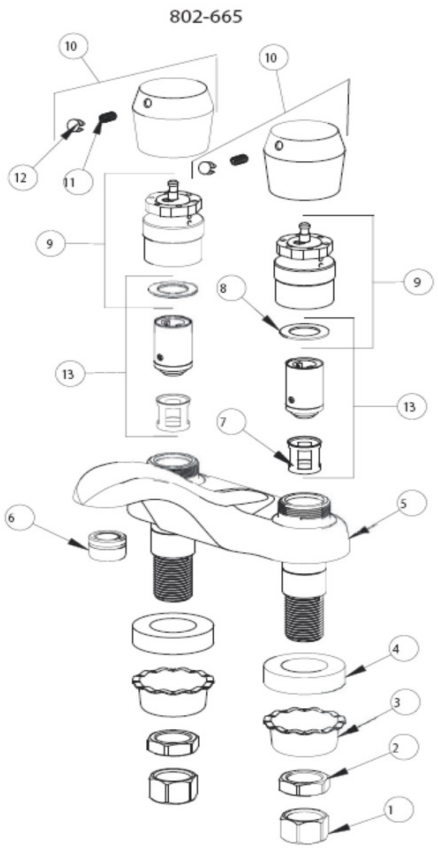

PARTS LIST - 802-665		
1	**401168**	COUPLING NUT
2	**802235**	LOCKNUT
3	**400105**	BASIN COCK WASHER
4	**600256**	WASHER
5	_____	VALVE BODY (NOT SOLD SEPERATLY)
6	**404660**	SOFTFLO OUTFIT
7	**667-402**	MVP FILTER
8	**665-011**	SEALING WASHER
9	**801985**	ACTUATOR
10	**665-PSH**	PUSH HANDLE ASSEMBLY
11	**804719**	SET SCREW
12	**808028**	BUTTONS, HOT AND COLD
13	**807646**	METERING VALVE CARTRIDGE

CHICAGO FAUCETS

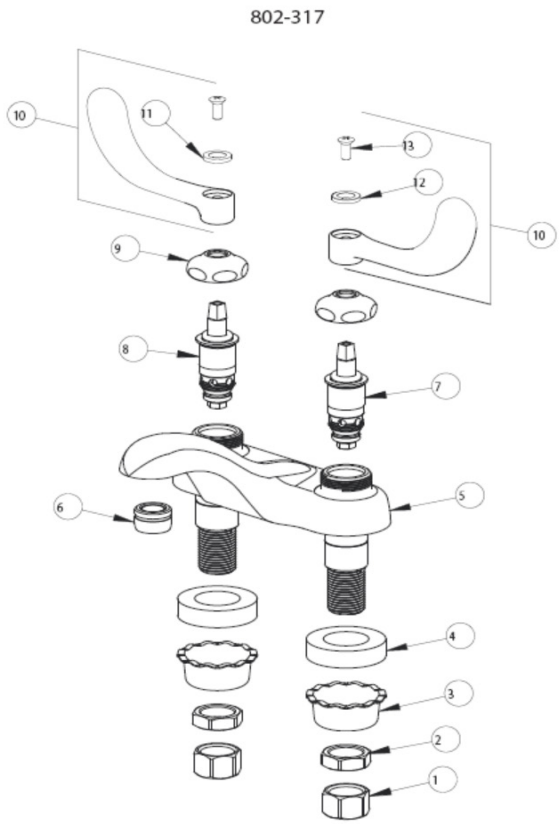

PARTS LIST - 802-317		
1	**401168**	COUPLING NUT
2	**802235**	LOCKNUT
3	**400105**	BASIN COCK WASHER
4	**600256**	WASHER
5	_____	VALVE BODY (NOT SOLD SEPARATELY)
6	**404660**	SOFTFLO OUTLET
7	**805933**	QUATURN UNIT(RH)
8	**805934**	QUATURN UNIT(LH)
9	**801920**	CAP
10	**807142**	WRISTBLADE HANDLE ASSEMBLY
11	**803105**	INDEX BUTTON(RED)
12	**803110**	INDEX BUTTON(BLUE)
13	**808846**	SCREW

CHICAGO FAUCETS - 786-WCE3 - 804961

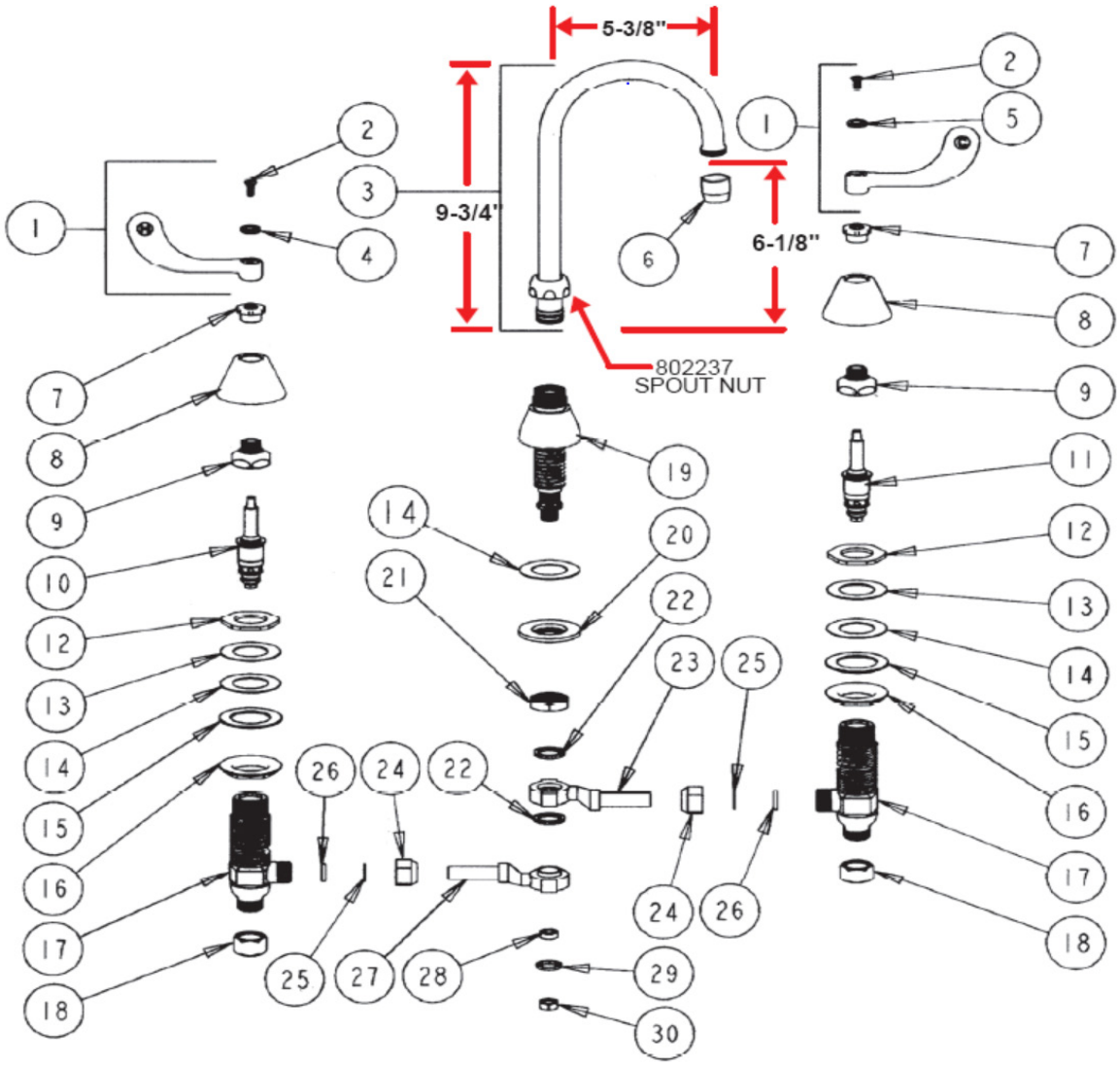

1	**802248-HOT 802249-COLD**	4" BLADE HANDLE (HOT/COLD)	16	**806007**	LOCKNUT
2	**804916**	SCREW	17	**250-194**	BODY VALVE
3	**803090**	GN SPOUT A TYPE END	18	**401168**	COUPLING NUT
4	**803105**	BUTTON RED INDEX (HOT)	19	**000391**	SPOUT BASE ASSEMBLY
5	**803110**	BUTTON BLUE INDEX (COLD)	20	**806006**	STEEL WASHER
6	**401778**	SOFTFLO ASSEMBLY-AERATOR	21	**806007**	LOCKNUT
7	**803115**	ESCUTCHEON NUT	22	**803128**	HARD GASKET
8	**803130**	ESCUTCHEON	23	**807560**	SWIVEL ASSEMBLY
9	**803125**	CONCEALED CAP	24	**49-031**	NUT
10*	**805936-COLD**	LH QUATURN UNIT-NEW STYLE	25	**250-027**	WASHER BRASS
11*	**805939-HOT**	RH QUATURN UNIT-NEW STYLE	26	**803127**	RUBBER WASHER
12	**807634**	LOCKNUT	27	807561	SWIVEL ASSEMBLY
13	**807633**	BRASS WASHER	28	803790	RUBBER WASHER
14	**803126**	WASHER-RUBBER	29	806008	RETAINER
15	**55-10**	GALVANIZED WASHER	30	806009	NUT
*OLD STYLE COLD IS #800220 OLD STYLE HOT IS #800215			*CERAMIC COLD IS #805973 CERAMIC HOT IS #805972		

10

REPAIR KIT FOR DELTA TYPE FAUCETS

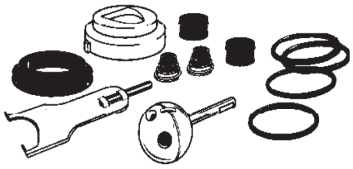

FOR LAV, KITCHEN, TUB & SHOWER REPAIRS VALVES WITH METAL HANDELS
800615 - KIT WITH STAINLESS STEEL BALL
801725 - KIT WITH BRASS BALL

KIT FOR DELTA TYPE FAUCETS LAV, KITCHEN, TUB & SHOWER VALVES

801670 -WITH SEAT & SPRINGS, ALLEN WRENCH, O-RINGS & CAM

CAM REPAIR KIT FOR DELTA TYPE FAUCETS LAV KITCHEN, TUB & SHOWER VALVES WITH METAL HANDLES

800617

REPAIR KIT FOR DELTA TYPE FAUCETS

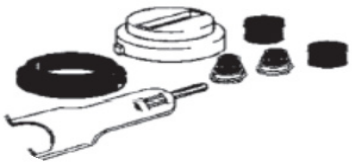

201159 - WRENCH ONLY

801671 - FOR LAV, KITCHEN, TUB & SHOWER REPAIRS VALVES WITH ACRYLIC HANDLES

SEAT AND SPRING KIT FOR DELTA TYPE FAUCETS (NEW TYPE)

800640

807589 -RUBBER SEAT ONLY

CAM REPAIR KIT FOR DELTA TYPE FAUCETS FOR LAV, KITCHEN, TUB & SHOWER VALVES WITH ACRYLIC HANDLES

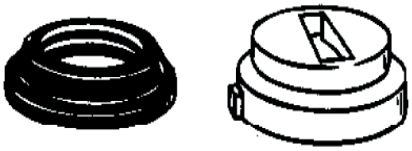

800617

REPAIR KIT FOR DELTA TYPE FAUCETS

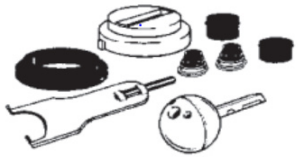

201159 - WRENCH ONLY

802190 - FOR LAV, KITCHEN, TUB & SHOWER REPAIRS VALVES WITH ACRYLIC HANDLES KIT HAS STAINLESS STEEL BALL W/ BRASS STEM

SEAT & SPRING KIT FOR DELTA TYPE FAUCETS (OLD TYPE)

801955

807590 -RUBBER SEAT ONLY

CONVERSION BALL FOR DELTA CONVERTS ACRYLIC HANDLE VALVES TO SINGLE LEVER METAL HANDLE

802701

NOTE: WHEN CONVERTING WITH THE ABOVE BALL, CAM KIT **800616** IS REQUIRED

REPAIR KIT FOR DELTA TYPE FAUCETS

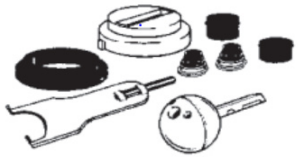

201159 - WRENCH ONLY

FOR LAV, KITCHEN, TUB & SHOWER REPAIRS VALVES WITH METAL HANDLES
800672 - OEM
800673 - GENERIC (LESS SEAT WRENCH)

CARTRIDGE FOR TWO HANDLE FAUCTS FITS DELTA, DELEX & FEDERAL

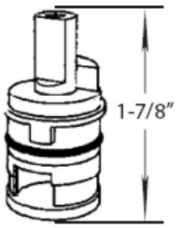

800565 - GENERIC CARTRIDGE
801418 - OEM CARTRIDGE
800023 - OEM BRASS/CERAMIC STEM KIT FOR USE WITH BLADE HANDLES- HEAVY
802375 - B&K GENERIC HEAVY DUTY
DELTA TYPE CARTRIDGE
804911 - C.P. HANDLE SCREW ONLY FOR STEM
803777 - O-RING

BALLS FOR DELTA TYPE FAUCETS (FOR ACRYLIC HANDLE)

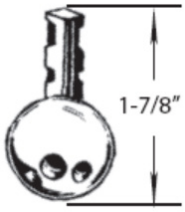

800255 - BRASS
800650 - STAINLESS STEEL

MASTER REPAIR KIT ALL DELTA TYPE FAUCETS

802259
201159- WRENCH ONLY

SPOUT O-RING KIT

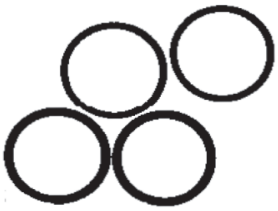

800567 - FOR SINGLE LEVER FAUCET
803810 - FOR TWO HANDLE FAUCET

BALLS FOR DELTA TYPE FAUCET (FOR METAL HANDLES)

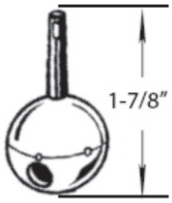

800250 - BRASS
805041 - STAINLESS STEEL

DELTA REPAIR PARTS - SINGLE HANDLE MONITOR BATH VALVES
1700 SERIES PRESSURE BALANCE MODELS

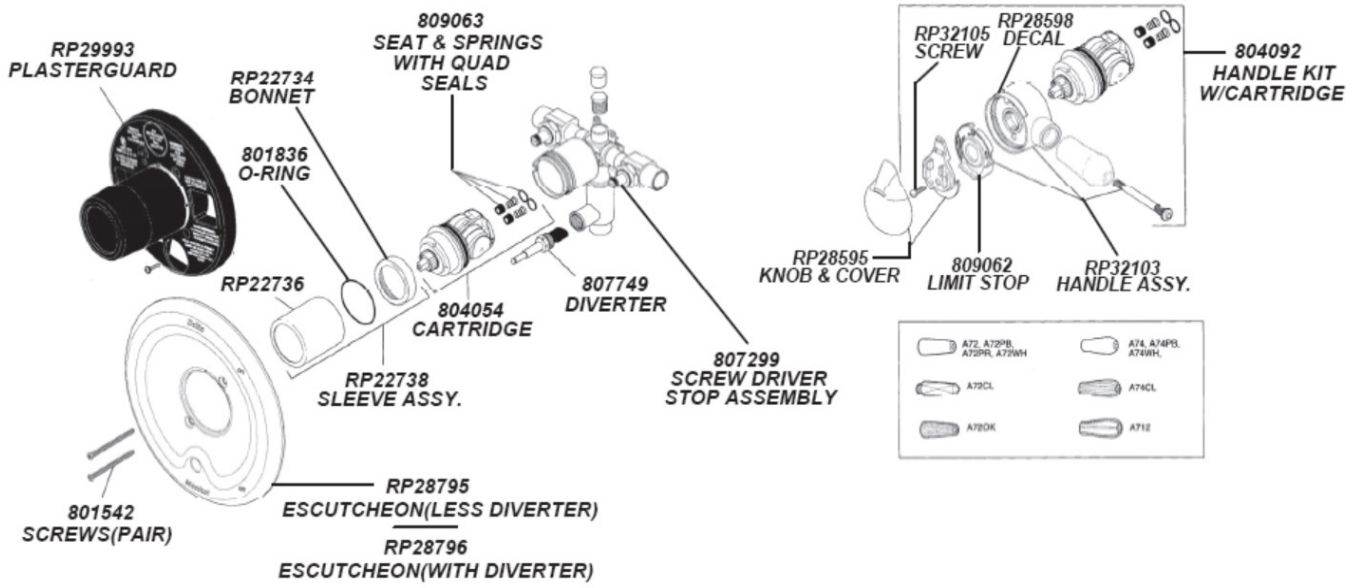

DELTA REPAIR PARTS - SINGLE HANDLE MONITOR BATH VALVES
1500 SERIES PRESSURE BALANCE MODELS

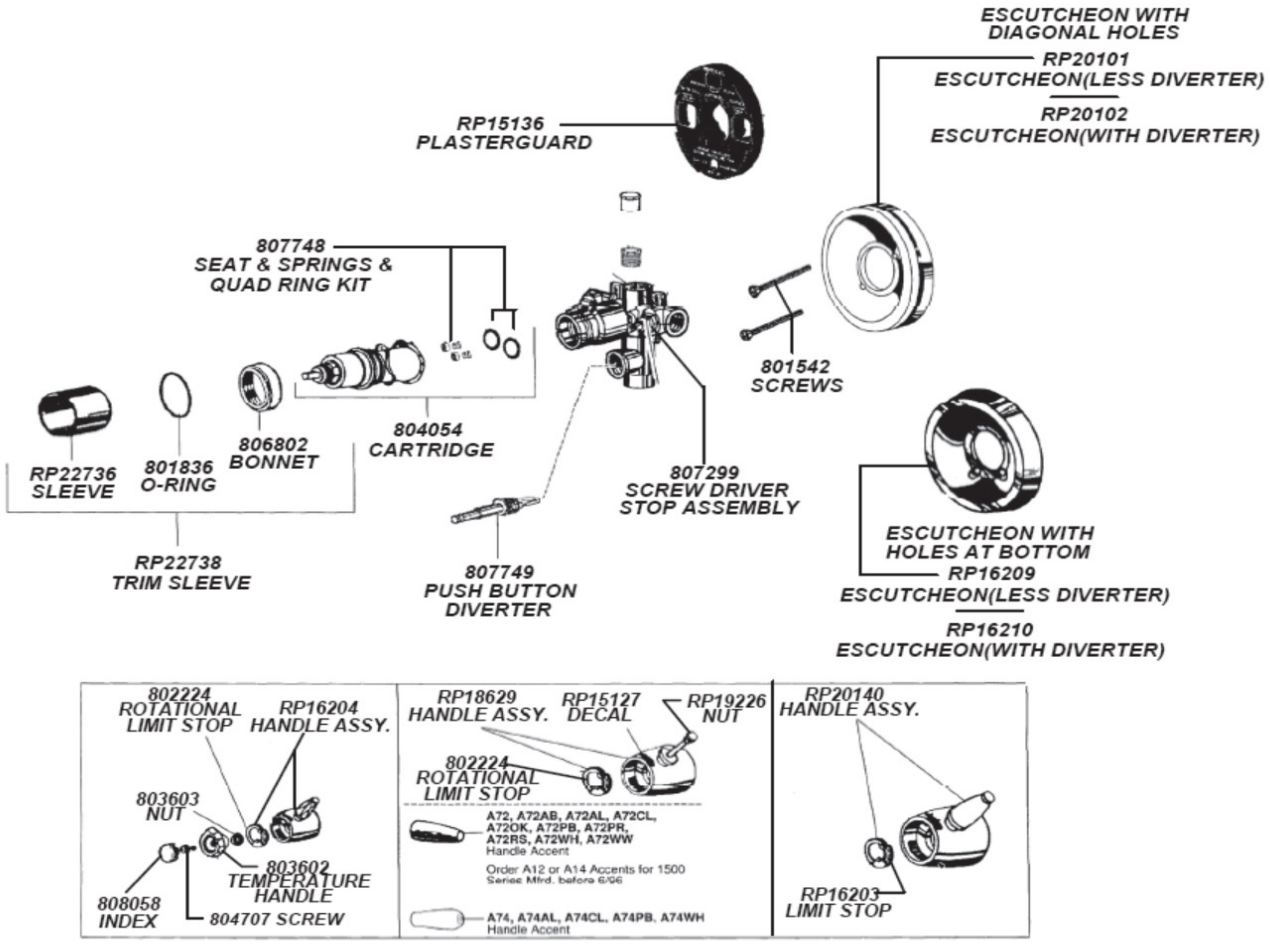

10

DELTA REPAIR PARTS - SINGLE HANDLE BATH VALVES
MODELS 601, 636, 641, & 642 SERIES

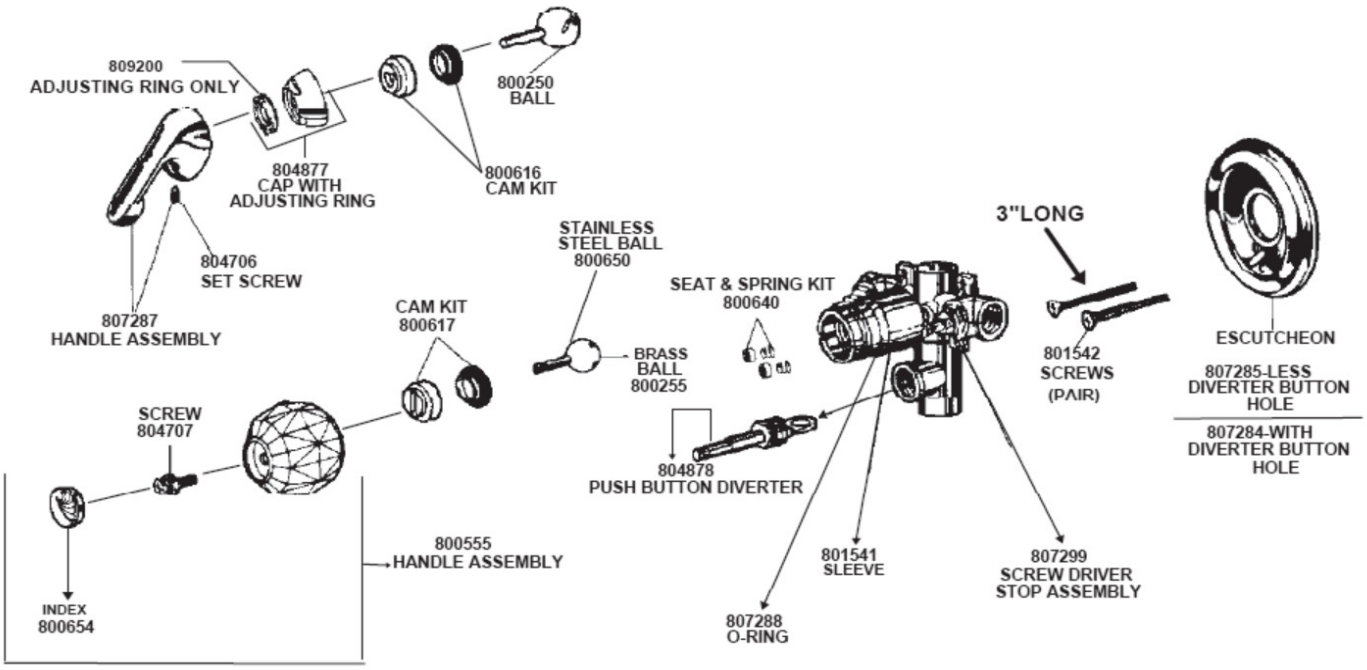

DELTA REPAIR PARTS - SINGLE HANDLE MONITOR BATH VALVES
PRESSURE BALANCE MODELS 1300 & 1400 SERIES

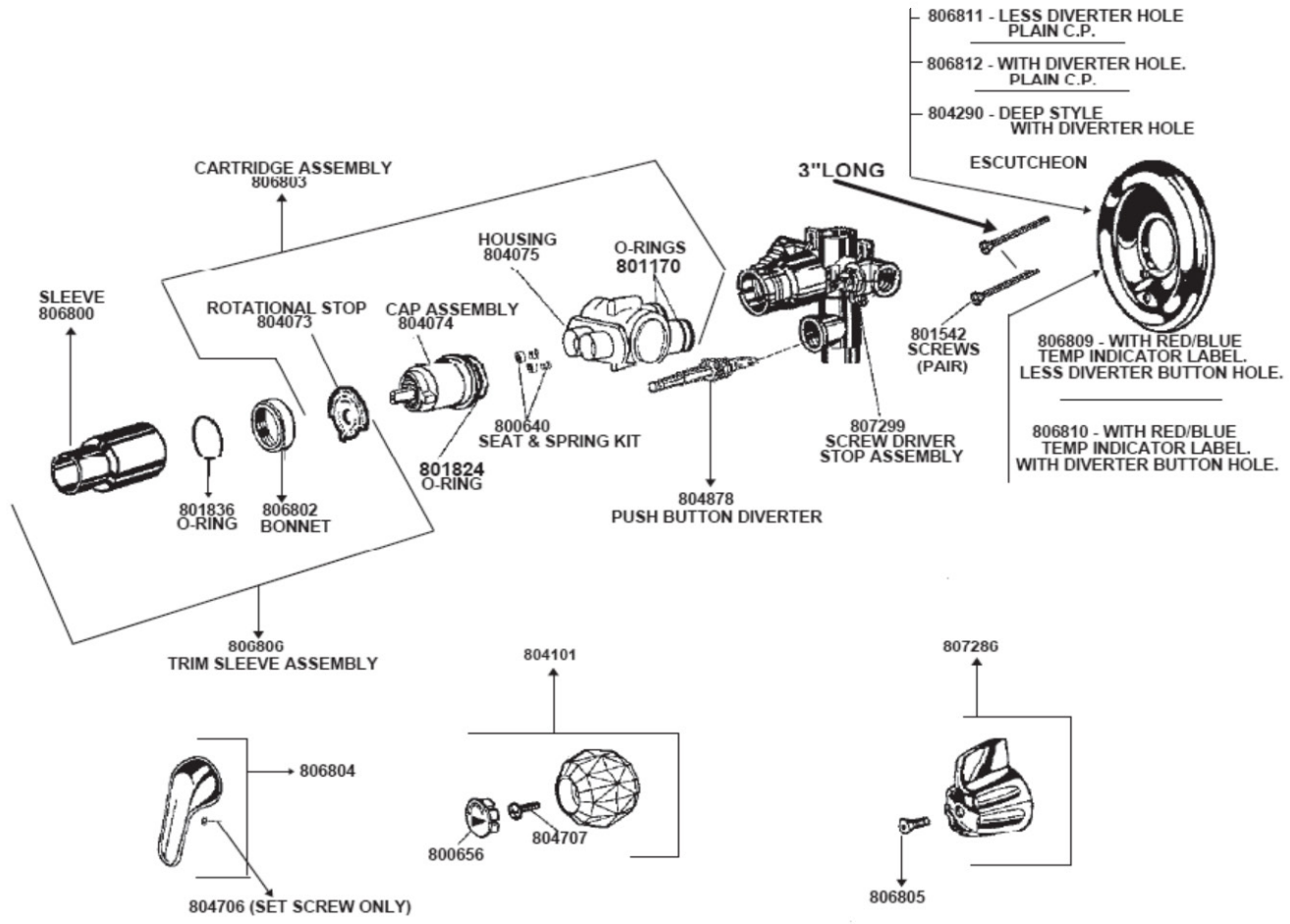

10

DELTA - SINGLE HANDLE LAVATORY FAUCETS
MODELS 502, 503, 504, 522, & 524 SERIES

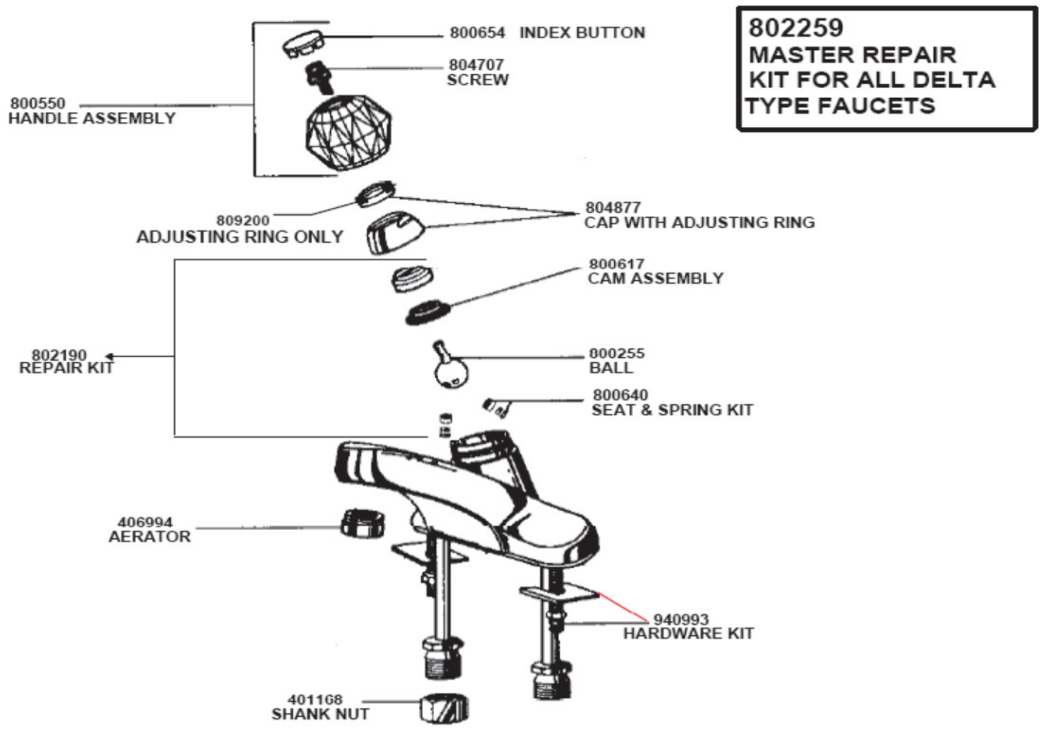

MODELS 500, 501, 505, 511, 515, 516, 520, 523, & 525 SERIES

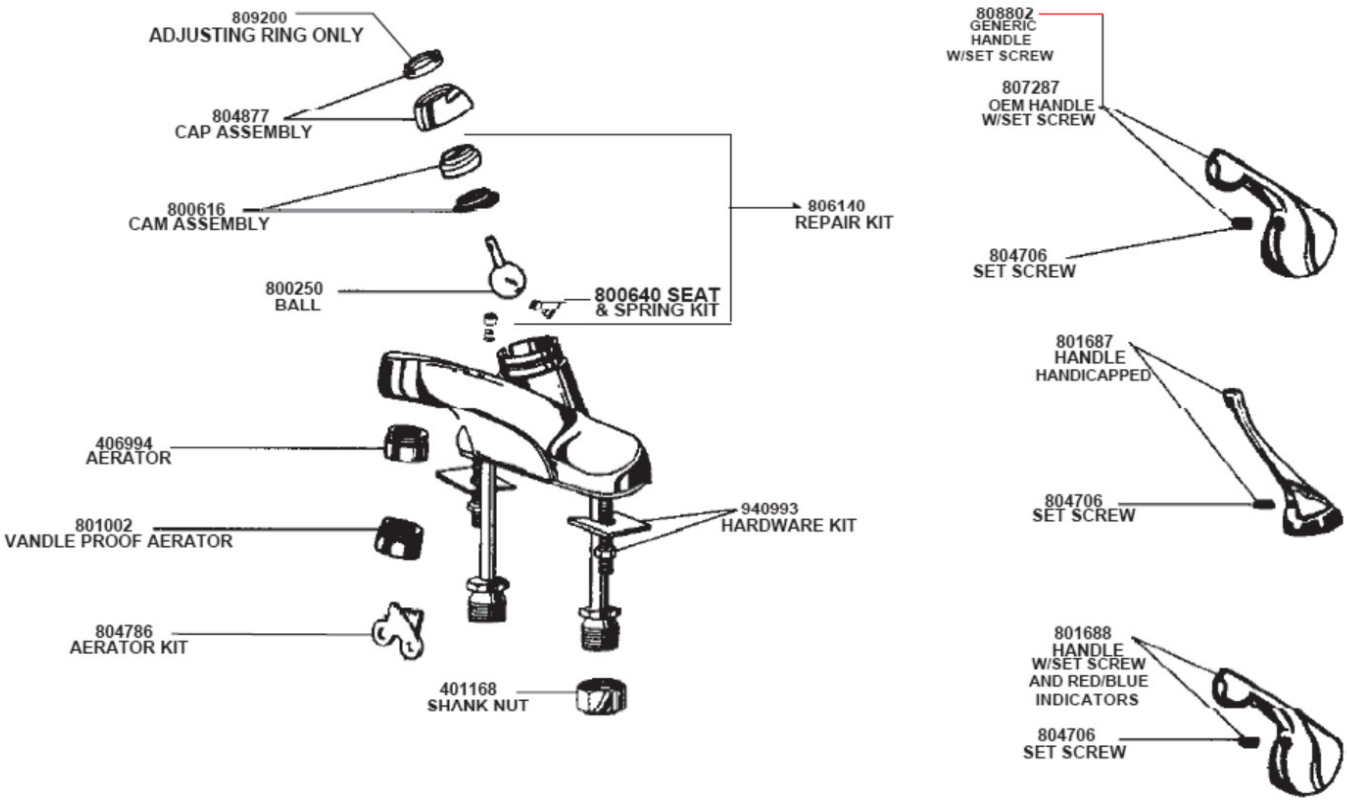

10

REPLACEMENT PARTS FOR DELTA TYPE FAUCETS

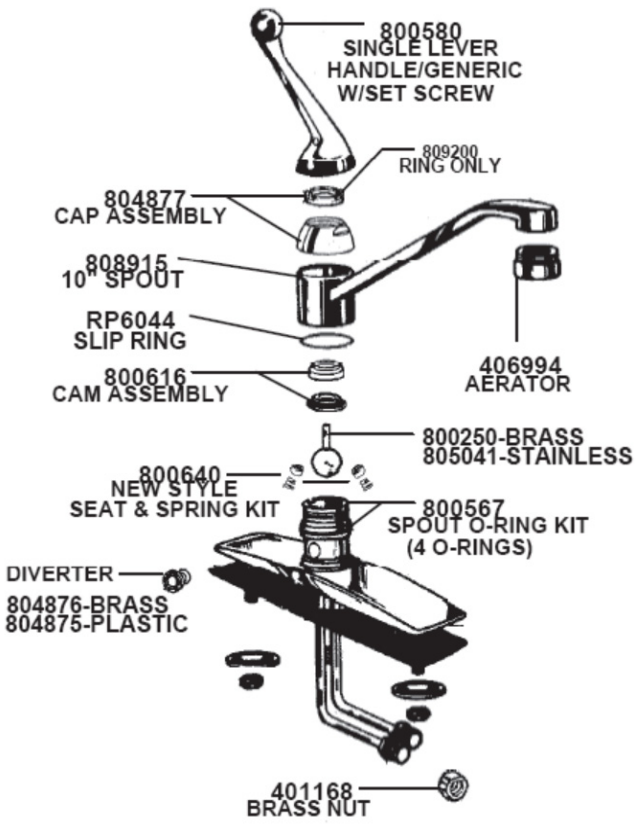

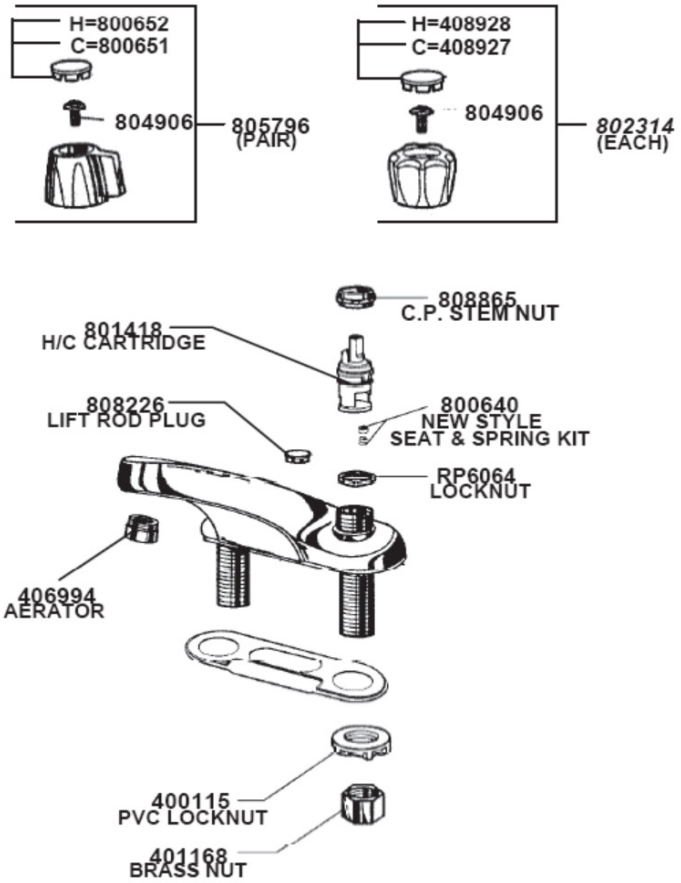

DELTA SELF-CLOSE LAVATORY FAUCETS

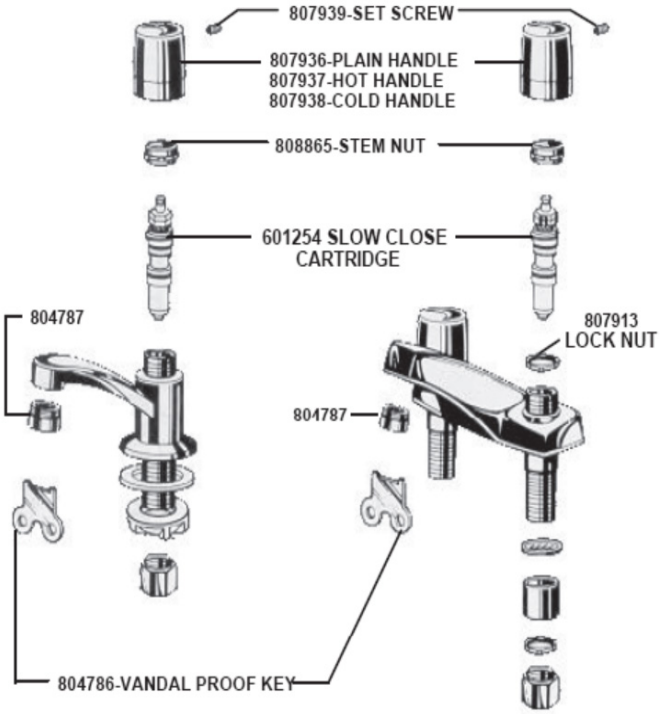

DELTA TIMER ACTIVATED FAUCETS

ABOVE SINGLE FAUCET AND TWO HANDLE FAUCET BOTH USE BELOW TIMER ACTIVATED ASSEMBLIES

(USE COLD CARTRIDGE ONLY FOR SINGLE HANDLE FAUCET)

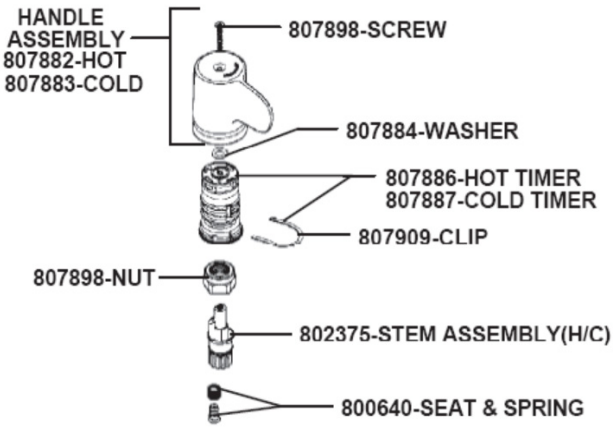

DELTA - 4" CENTERSET FAUCETS (Cambridge Brass 21B)

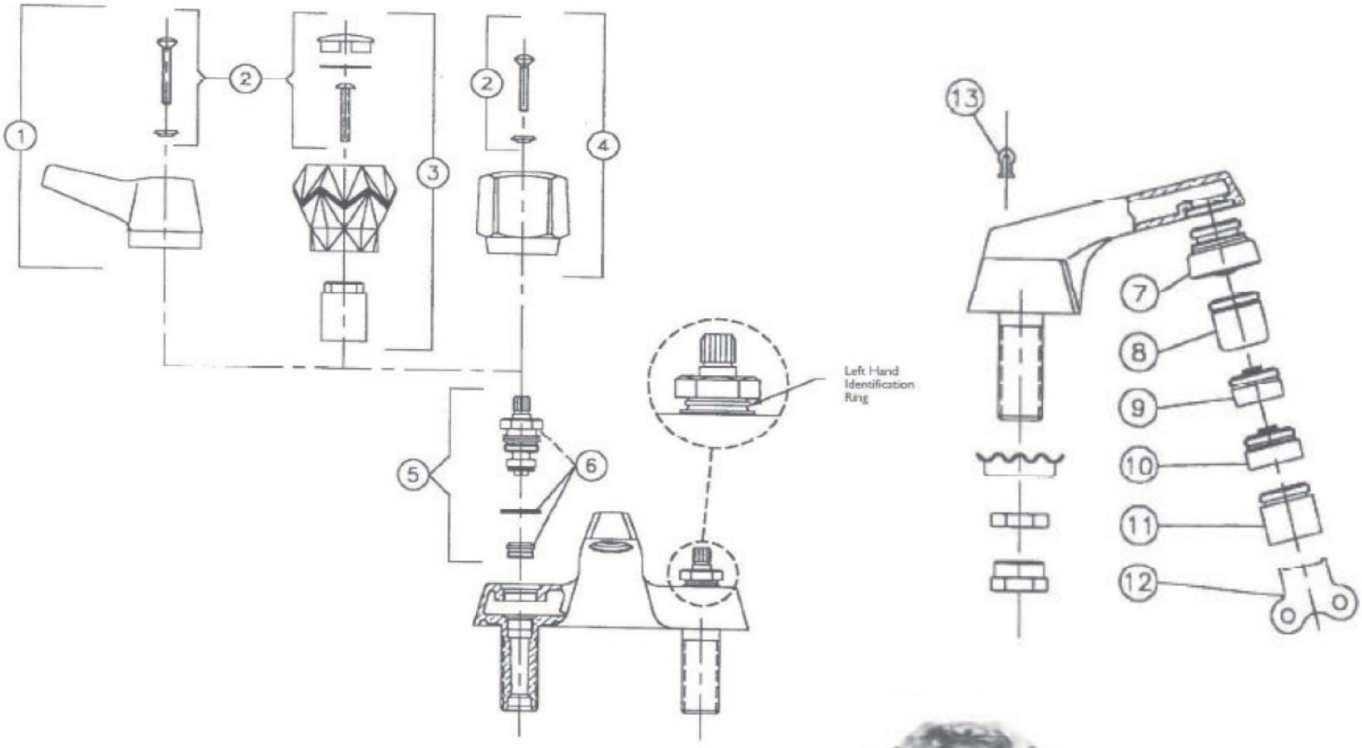

1	**060046A**	2-3/4" Hooded Lever Blade, Screw, Red & Blue Index	7	**76843-1**	VR Rose Spray & Driver Bit
2	**060022A**	Handle Screws, Index Kit (Includes short & long handle screws, Red & Blue index washers)	8	**77145**	VR Moderator & Wrench
	060148A	Red & Blue Index Washer Kit	9	**77143**	Standard Aerator
3	**060024A**	Acrylic Handle Complete w/ Screws	10	**77159**	VR Aerator & Wrench
4	**060050A**	5 Fluted Handle, Screw & Red/Blue Index	11	**77323**	VR 0.5 GPM Flow Control Outlet & Wrench
5	**806816**	RH Brass Structure & Renewable Seat (for hot water side w/ lever handles, both sides w/ acrylic & fluted handles)	12	**17195**	VR Wrench
	806817	LH Brass Structure & Renewable Seat (for cold water side w/ lever handles	13	**060042A**	Chain Stay Package (for plug & chain)
6	**060021A**	Structure Repair Kit (includes seat washers & screw, stem & capnut "O" rings, capnut fibre washers & renewable seats)			
	060139A	Seat Washer Package			
	060140A	Stem "O" Ring Package			
	060142A	Structure "O" Ring Package			
	060144A	Renewable Seat Package			

DELTA - 4" HEAVY DUTY CENTERSET FAUCETS (Cambridge Brass 21T)

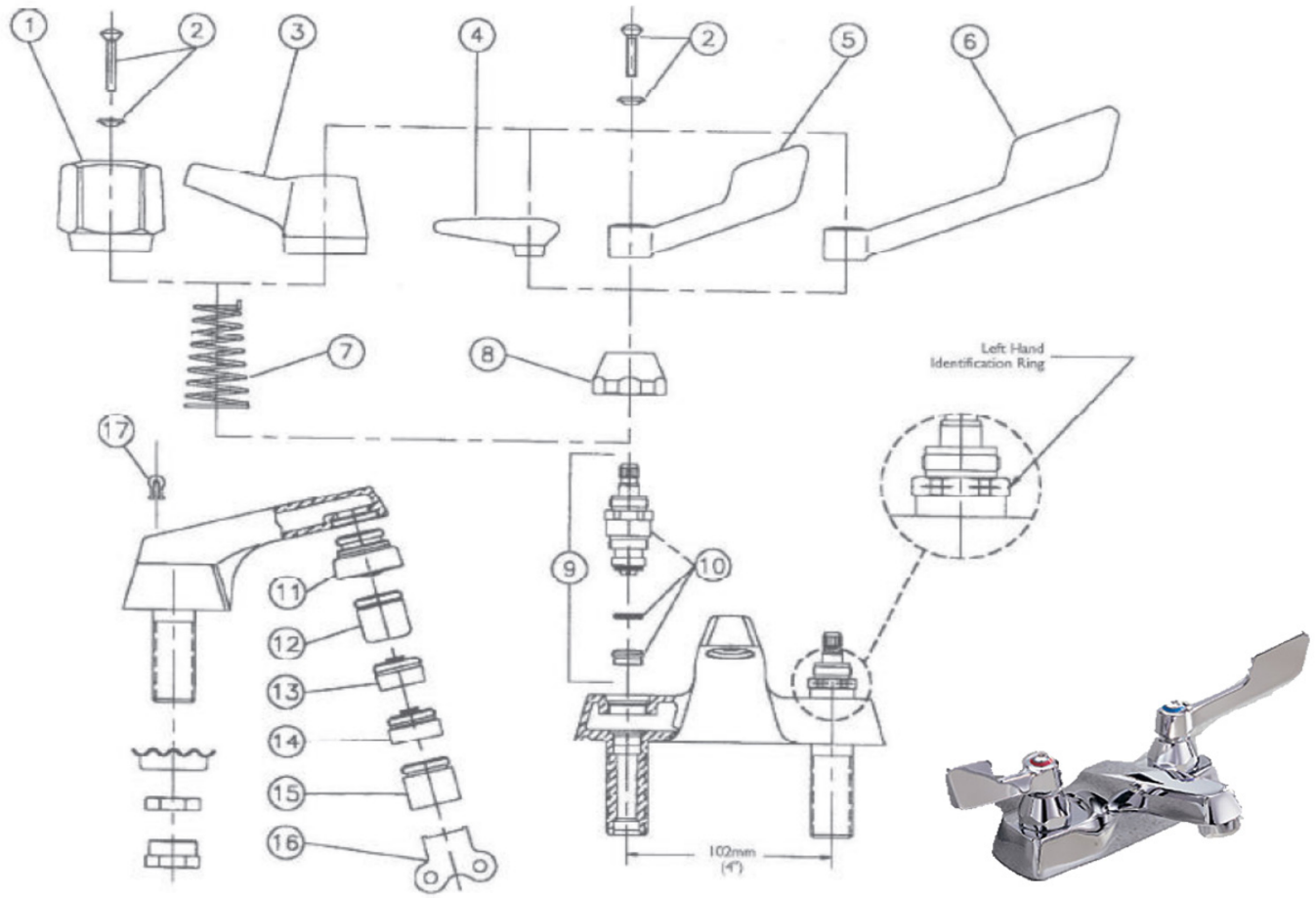

1	**76403**	5 Fluted Handle, Screw & Red/Blue Index	9	**806818**	RH CP Brass Tuf-Teck Structure & Renewable Seat (for hot water side w/ all lever handles, both sides w/ 76403 fluted handle)
2	**060022A**	Handle Screws, Index Kit includes short & long handle screws, red & blue index washers			
	17483	No. 3 Scrulox 8 Screwdriver for above		**807878**	LH CP Brass Tuf-Teck Structure & Renewable Seat (for cold water side w/ all lever handles)
	060145A	Short Handle Screws for No. 3, 4, 5, & 6 Handles	10	**77159**	Structure Repair Kit (Includes seat Washers & Screws, stem & capnut "O" rings, capnut fibre washers & renewable seats)
	060146A	Long Handle Screws for No. 1 Handle	11	**060139A**	Seat Washer Package
	060148A	Red/Blue Index Washer Kit		**060140A**	Stem "O" Ring Package
	310259A	No. 3 Scrulox B Driver Bit		**060142A**	Structure Capnut "O" Ring
	310296A	No. 3 Square Driver Bit		**060144A**	Long CP Renewable Seat
3	**77189**	2-3/4" Hooded Lever Blade Handle, Screw, Red/Blue Index	11	**76843-1**	VR Rose Spray & Driver Bit
4	**76407-1**	Three Arm Handle, Screw, Red/Blue Index	12	**77145**	VR Moderator & Wrench
5	**76405-1**	4" Blade Handle, Screw, Red/Blue Index	13	**77143**	Standard Aerator
6	**76406-1**	6" Wrist Handle, Screw, Red/Blue Index	14	**77159**	VR Aerator & Wrench
7a	**060032A**	Springs for Self-Close Handles (#77189 Lever handle & #0600601A LH structure for Cold side- order separately)	15	**77323**	VR 0.5 CPM Flow Control Outlet & Wrench
7b	**068033A**	Springs for Self-Close Handles (#177189 lever & #76403 fluted & #060060A RH structure for Hot side- order separately)	16	**17195**	VR Wrench
8	**060264A**	Sani Guards	17	**060042A**	Chain Stay Package (for Plug & Chain)

DELTA - WIDESPREAD LAVATORY FAUCETS (Cambridge Brass)

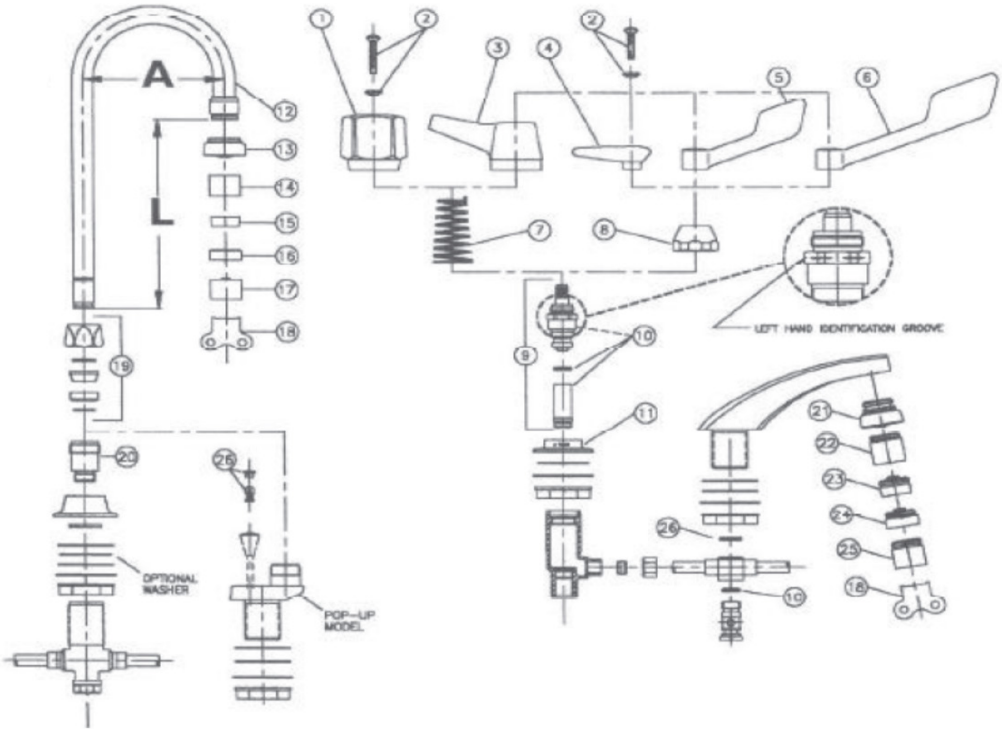

	060265A	Extension Kit for 1-1/4" Deck Thickness (for Cast & Offset spouts	11	**16581-1**	Deck Flange
	060268A	Extension Kit for 1-1/4" Deck Thickness (for inline GN spout	12	**76860**	R2 Goosneck Spout Complete A=4.5" L=7" (for other available optional gooseneck spouts see Page 46)
1	**76403**	5 Fluted Handle, Screw & Red/Blue Index	13	**76842**	VR Rose Spray & Driver Bit
2	**060022A**	Handle Screws, Index Kit (Includes short & long handle screws, red/blue index washers	14	**77144**	VR Moderator & Wrench
	17483	No. 3 Scrulox 8 Screwdriver for above	15	**77142**	Standard Aerator
	060145A	Short Handle Screws for No. 3,4,5, & 6 Handles	16	**77158**	VR Aerator & Wrench
	060146A	Long Handle Screws for No. 1 Handle	17	**77322**	VR 0.5 CPM Flow Control Outlet & Wrench
	060148A	Red/Blue Index Washer Kit	18	**17195**	VR Wrench
	310259A	No. 3 Scrulox 8 Driver Bit	19	**060026A**	Goosneck Spout Repair Kit (includes retaining rings, "O" rings, swivel & rigid collars, & spout nut)
	310296A	No. 3 Square Driver Bit			
3	**77189**	2-3/4" Hooded Lever Blade Handle, Screw, Red/Blue Index		**060143A**	Spout "O" Ring Kit
4	**76407-1**	Three Arm Handle, Screw, Red/Blue Index		**060199A**	Rigid & Swivel Collar Kit
5	**76405-1**	4" Blade Handle, Screw, Red/Blue Index		**060244A**	Rigid Collar Kit
6	**76406-1**	6" Wrist Handle, Screw, Red/Blue Index		**060245A**	Retaining Ring Kit
7a	**060032A**	Springs for Self-Close Handles (#77189 Lever handle & #0600601A LH structure for Cold side- order separately)		**060246A**	Swivel Collar Kit
7b	**068033A**	Springs for Self-Close Handles (#177189 lever & #76403 fluted & #060060A RH structure for Hot side- order separately)	20	**17023**	Gooseneck Spout Adaptor
8	**060037A**	Sani Guards	21	**76843-1**	VR Rose Spray & Driver Bit
9	**806819**	RH CP Brass Tuf-Teck Structure & Renewable Seat (for hot water side w/ all lever handles, both sides w/ 76403 fluted handle)	22	**77145**	VR Moderator & Wrench
	806820	LH CP Brass Tuf-Teck Structure & Renewable Seat (for cold water side w/ all lever handles)	23	**77143**	Standard Aerator
10	**060021A**	Structure Repair Kit (Includes seat Washers & Screws, stem & capnut "O" rings, capnut fibre washers & renewable seats)	24	**77159**	VR Aerator & Wrench
	060139A	Seat Washer Package	25	**77323**	VR 0.5 GPM Spout Outlet & Wrench
	060140A	Stem "O" Ring Package	26	**060042A**	Plug & Chain Stay Post, Hole Plug Button & "O" Ring Kit
	060142A	Structure Capnut "O" Ring			
	W16392	Long CP Renewable Seat			

DELTA - SERVICE SINK FAUCET - ROUGH CHROME (Cambridge Brass 28T9)

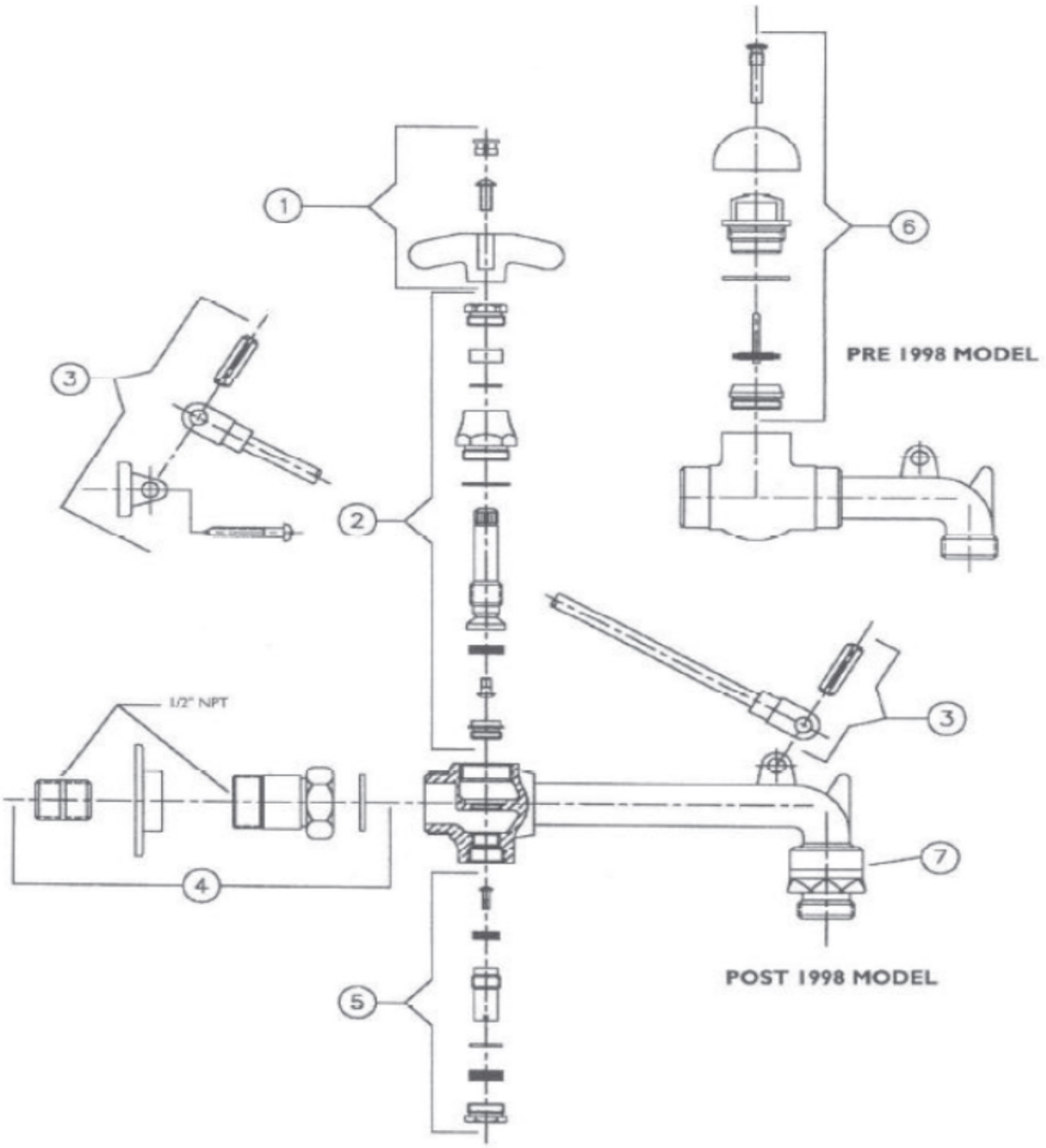

1	**060027A**	Cross Handle w/ Screws, Red/Blue Index
2	**807879**	Stem Structure Complete w/ Seat
3	**060056A**	Pail Brace Complete
4	**060198A**	Shank Kit
	W16538	Shank Washer
5	**060058A**	Integral Stop Stem Structure Complete
6	**060018A**	Vacuum Breaker Repair Part Kit (Pre-1998)
7	**77476**	ASSE AprovedbHose End Vacuum Breaker (from 1998
	500066A	Diaphragm & Internal VB Repair Kit

ELJER - REPAIR PARTS

517-1060
517-1080
517-3080

537-0110
537-0130
537-3130

517-1070

537-0120

517-1020, 517-1040
517-3040

517-1000

517-1030

517-1010

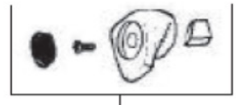

805781-ACRYLIC HANDLE ASSEMBLY

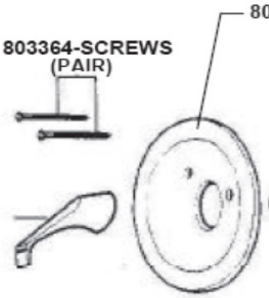

809965-ESCUTCHEON
803364-SCREWS (PAIR)
804717-SLEEVE
805782-CARTRIDGE ASSEMBLY W/SPRINGS & SEATS
801015-C.P. METAL HANDLE
801273-SEAT & SPRING KIT
805826-DOME SLEEVE WITH RETAINER RING
801271 CARTRIDGE ASSEMBLY ONLY

ELJER - REPAIR PARTS

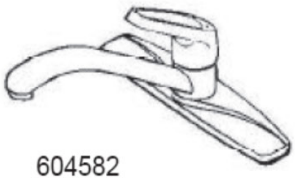

604582
COMPLETE FAUCET
W/OUT HOSE

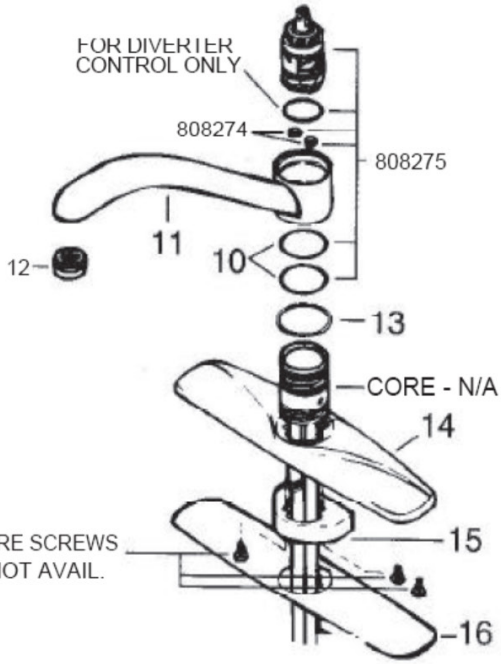

FOR DIVERTER CONTROL ONLY
808274
808275
11
12
10
13
CORE - N/A
14
CORE SCREWS NOT AVAIL.
15
16

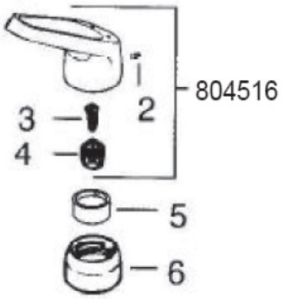

804516
2
3
4
5
6

10

ELJER - INSTITUTIONAL BRASS FITTINGS (PRISON LAVATORY FITTINGS)
PARTS LIST FOR FITTING NUMBER: 559-0861 (E-9396), 559-0871 (E-9396)
559-0881 (E-9398), 559-0891 (E-9399, DISC. 1/80), 490-2152-00

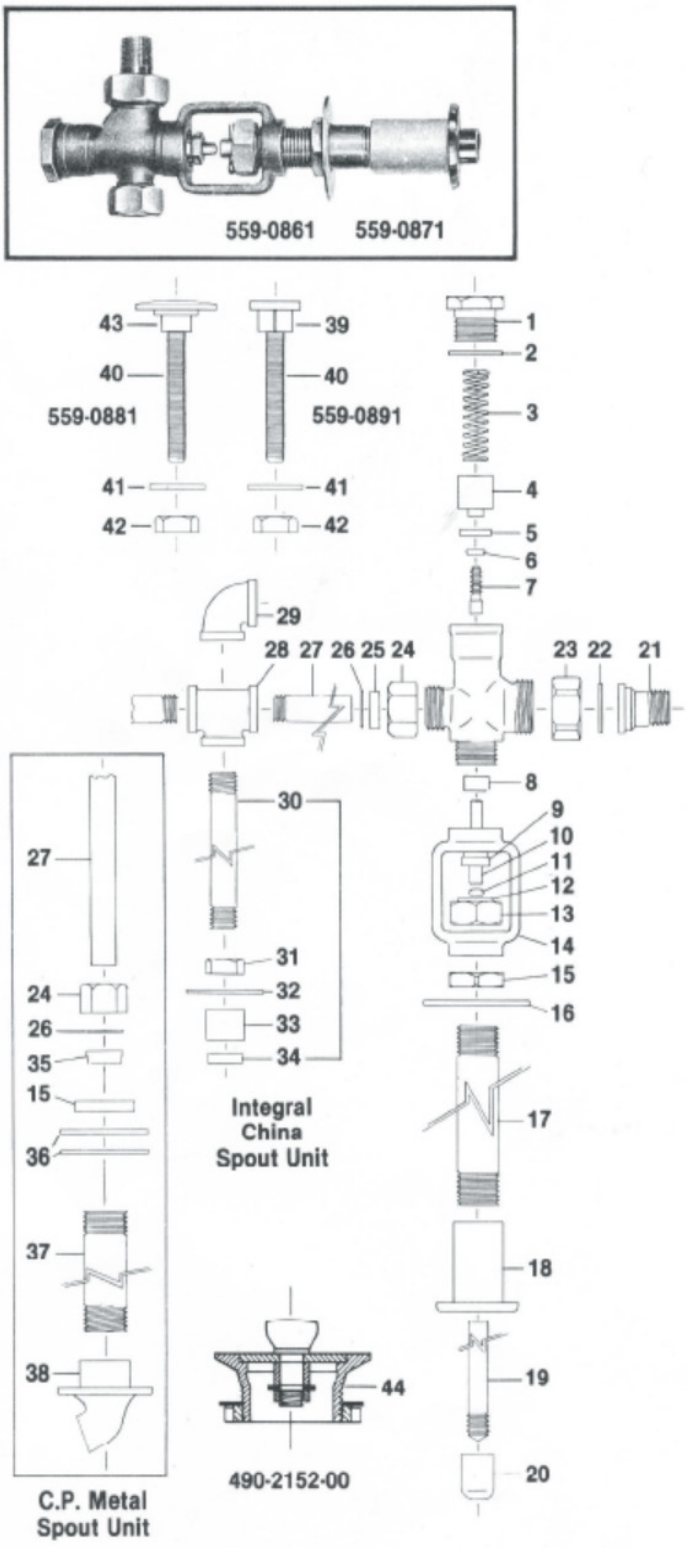

1	**490-1623-00**	CAP
2	**490-1644-00**	GASKET
3	**490-1643-00**	SPRING
4	**490-1641-00**	VALVE HEAD
5	**490-1213-00**	SEAT WASHER
6	**490-1331-00**	COLLAR
7	**490-4548-00**	VALVE STEM
8	**801727**	PACKING
9	**490-1620-00**	PACKING NUT
10	**807128**	VALVE STEM
11	**490-4699-00**	COTTER PIN
12	**490-1996-00**	FRICTION WASHER
13	**490-1645-00**	GUIDE NUT
14	**490-1619-00**	YOKE
15	**490-2272-00**	LOCKNUT
16	**490-1350-00**	WASHER
17	**490-1967-00**	SLEEVE(SPECIFY WALL THICKNESS)
18	**490-1621-00**	FLANGE
19	**490-1968-00**	PUSH ROD(SPECIFY WALL THICK-NESS)
20	**490-1622-00**	PUSH BUTTON
21	**490-1303-00**	TAILPIECE
22	**490-1163-00**	GASKET
23	**490-1378-02**	COUPLING NUT
24	**490-1305-00**	COUPLING NUT
25	**490-1312-00**	SLIP-JOINT GASKET
26	**490-1313-00**	FRICTION RING
27	**490-3630-00**	TUBE (3-5/8" LONG)
28	**490-2360-00**	TEE, 1/4" IPS (2 VALVE)
29	**490-2375-00**	ELBOW, 1/4" IPS (SINGLE VALVE)
30	**490-3631-00**	SUPPLY PIPE(SPECIFY WALL THICK-NESS)
31	**806356**	LOCKNUT
32	**490-1027-00**	WASHER
33	**490-2277-00**	EXPANSION GASKET
34	**490-1451-00**	COLLAR
35	**490-3434-00**	SLIP-JOINT GASKET
36	**490-2557-00**	WASHER(2)
37	**490-3712-00**	NIPPLE (SPECIFY WALL THICKNESS)
38	**490-2308-00**	C.P. METAL SPOUT
39	**490-1661-00**	BOLT HEAD
40	**490-2514-00**	ALL THREAD ROD, 3/8" (SPECIFY WALL THICKNESS)
41	**490-1062-00**	WASHER
42	**490-2500-00**	HEX NUT
43	**490-3955-00**	BOLT HEAD
44	**490-2152-00**	NON-REMOVEABLE WASTE STOPPER UNIT

FIAT - COMPLETE FAUCET - 605521

GROUP REPLACEMENT ASSEMBLY PARTS LIST		INDIVIDUAL COMPONENTS - COMPRISING GROUP ASSEMBLY	
GROUP ASSEMBLY #	DESCRIPTION	ITEM #	DESCRIPTION
GRA-01	HANDLE SPINDLE ASSEMBLY	RP-18	SEAT WASHER
		RP-24	SET WASHER SCREW
		RP-32	SPINDLE
GRA-02 **809466**	HANDLE MOUNTING GROUP ASSEMBLY	GRA-01	ASSEMBLY
		RP-01	PACKING NUT
		RP-21	BRASS WASHER
		RP-27	PACKING
		RP-33	HANDLE HUB
GRA-03	COUPLING ASSEMBLY	RP-02	COUPLING NUT
		RP-05	BUSHING (SOCKET)
		RP-10	SWIVEL
		RP-14	WALL FLANGE
		RP-19	WASHER
GRA-04 **809467**	VACUUM BREAKER DISC ASSEMBLY		
GRA-05	BRACE ASSEMBLY	RP-11	(2) WOOD SCREW
		RP-13	BRACE FLANGE
		RP-28	(2) S.S. ROLL PIN
		RP-31	WALL BRACE ROD
809467	VACUUM BREAKER ASSEMBLY	RP-06	SEAT
		RP-08	V.B. HUB
		RP-09	CAP
		RP-20	V.B. HUB WASHER
		RP-26	V.B. CAP SCREW
		GRA-04	ASSEMBLY
GRA-08	COMPLETE BODY ASSEMBLY	RP-12	NOZZLE
		RP-29	CENTER BODY
		RP-30	V.B. BODY

INDIVIDUAL COMPONENT REPLACEMENT PARTS LIST		
ACS #	ITEM #	DESCRIPTION
	RP-01	PACKING NUT
809459	RP-02	COUPLING NUT
809460	RP-03	SPINDLE-STOP
809461	RP-04	HANDLE
	RP-05	BUSHING-SOCKET
809462	RP-06	SEAT
809463	RP-07	SEAT
	RP-08	V.B. HUB
	RP-09	CAP
	RP-10	SWIVEL
	RP-11	WOOD SCREW
	RP-12	NOZZLE
	RP-13	BRACE FLANGE
	RP-14	WALL FLANGE
	RP-15	NIPPLE
809464	RP-16	HOT INDEX
809465	RP-17	COLD INDEX
805073	RP-18	SEAT WASHER-TEFLON
809474	RP-19	WASHER-SHANK
809469	RP-20	V.B. HUB WASHER
809472	RP-21	BRASS WASHER-STOP
809473	RP-22	HUB WASHER-STEM
809716	RP-23	WASHER-STOP
*805751	RP-24	SEAT WASHER-STOP STEM SCREW
809476	RP-25	HANDLE SCREW
	RP-26	V.B. CAP SCREW
809477	RP-27	PACKING
	RP-28	S.S. ROLL PIN
	RP-29	CENTER BODY
	RP-30	V.B. BODY
	RP-31	WALL BRACE ROD
	RP-32	SPINDLE
	RP-33	HANDLE HUB
	GRA-04	DISC & WASHER
*AVAILABLE ONLY AS A COMPLETE UNIT - GRA-08		

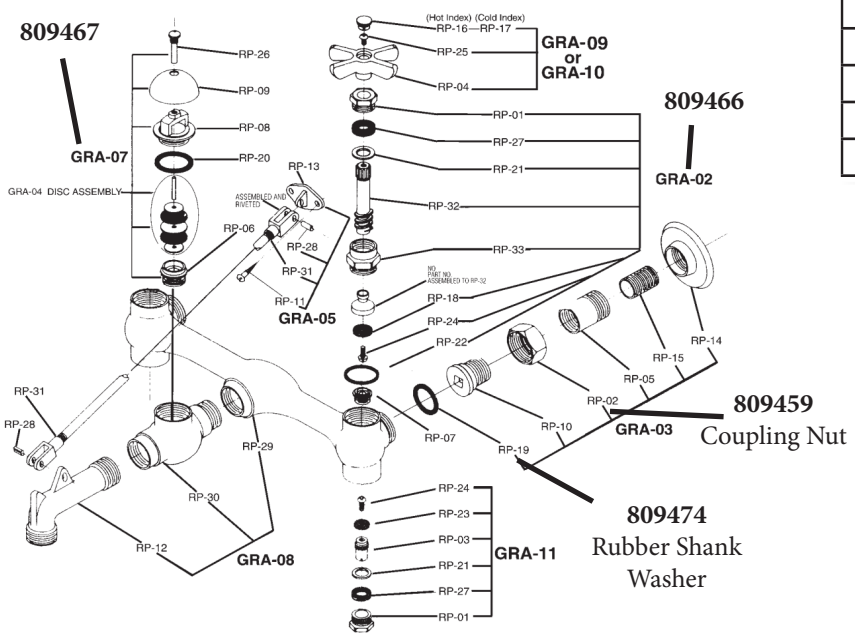

10

FISHER - SPRAY VALVE REPAIR KIT

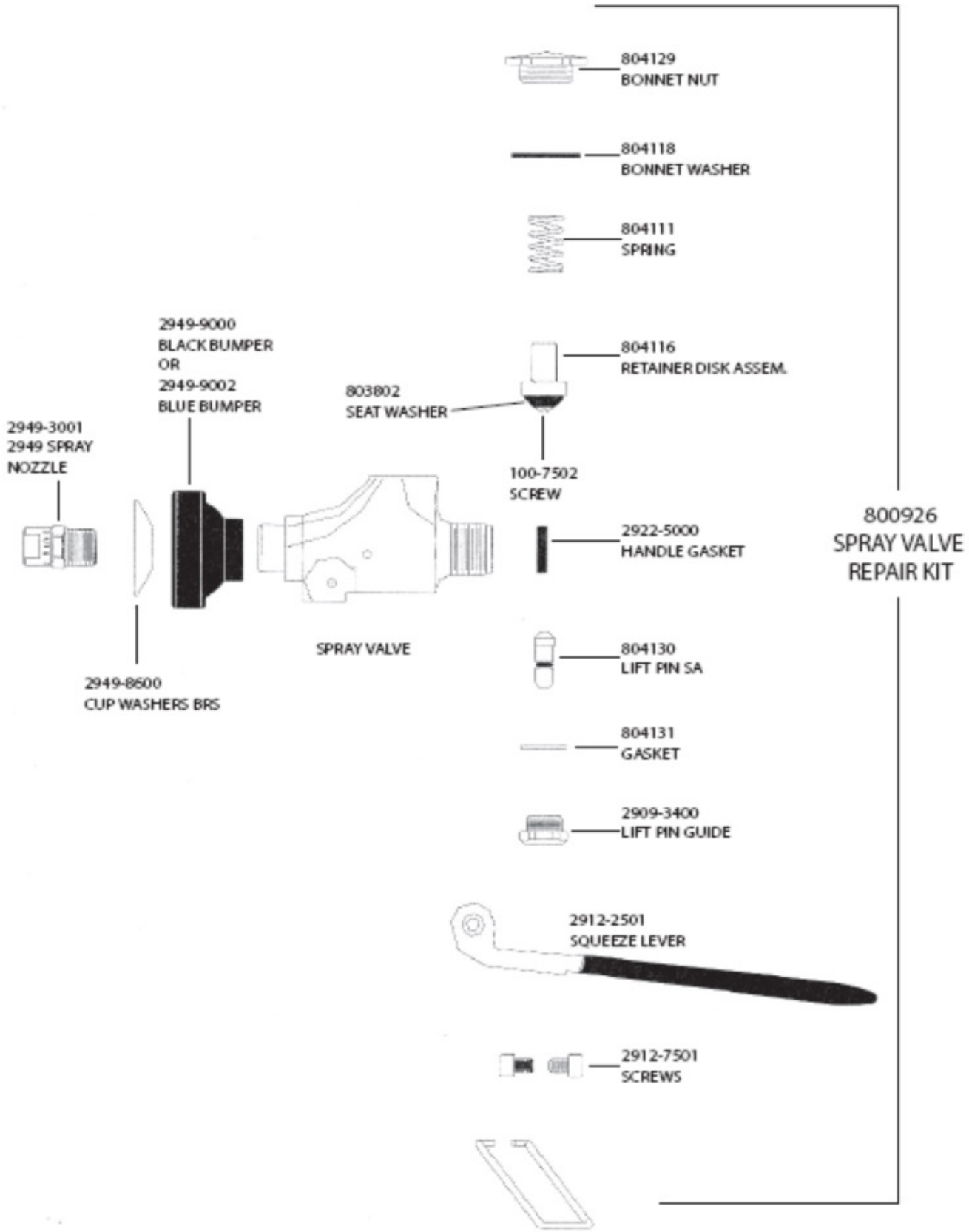

10

FISHER - COMPONENT PARTS (PRE-RINSE UNITS - SWIVEL TYPE

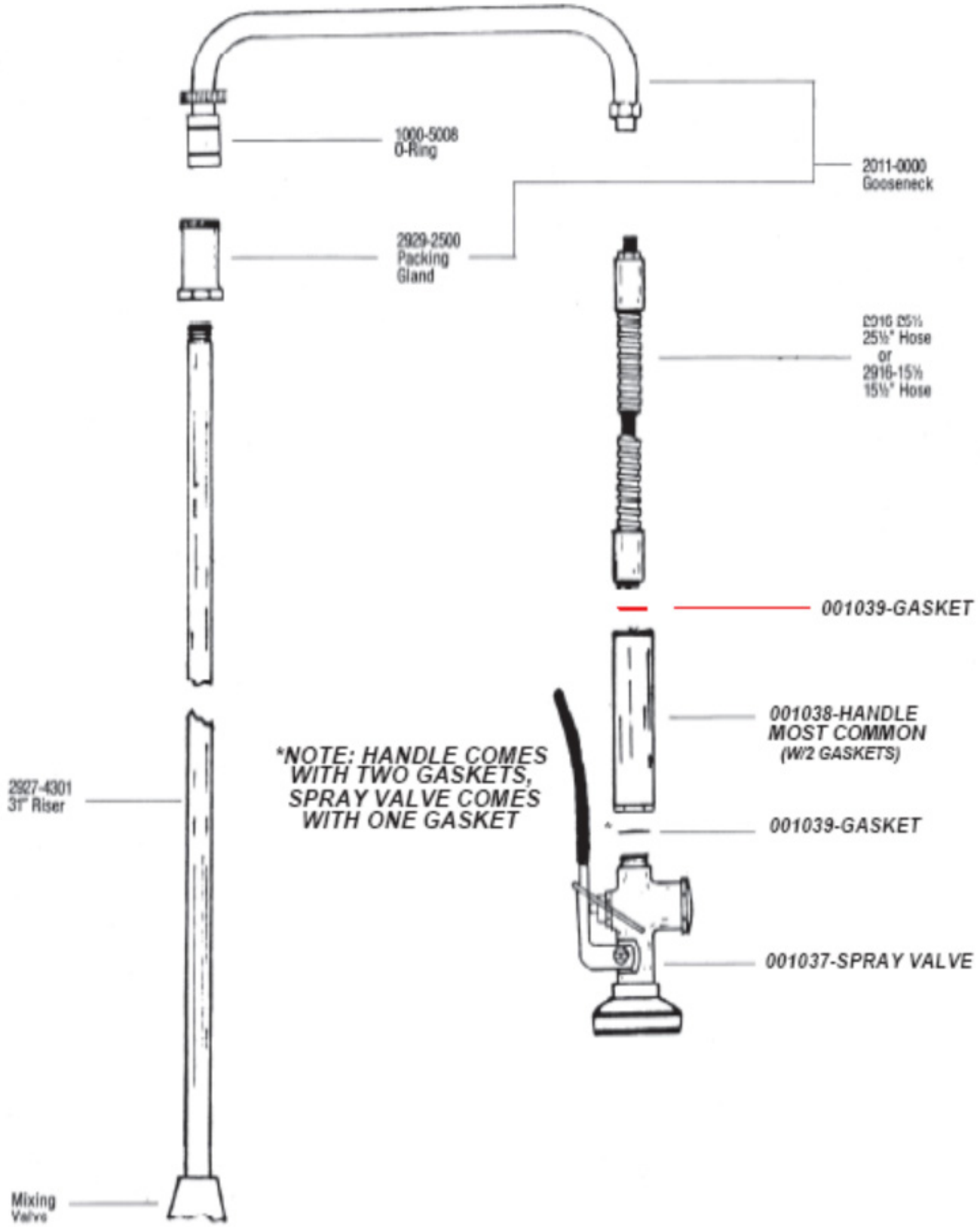

10

HIGHLAND LABS SURGICAL VALVE UNIT

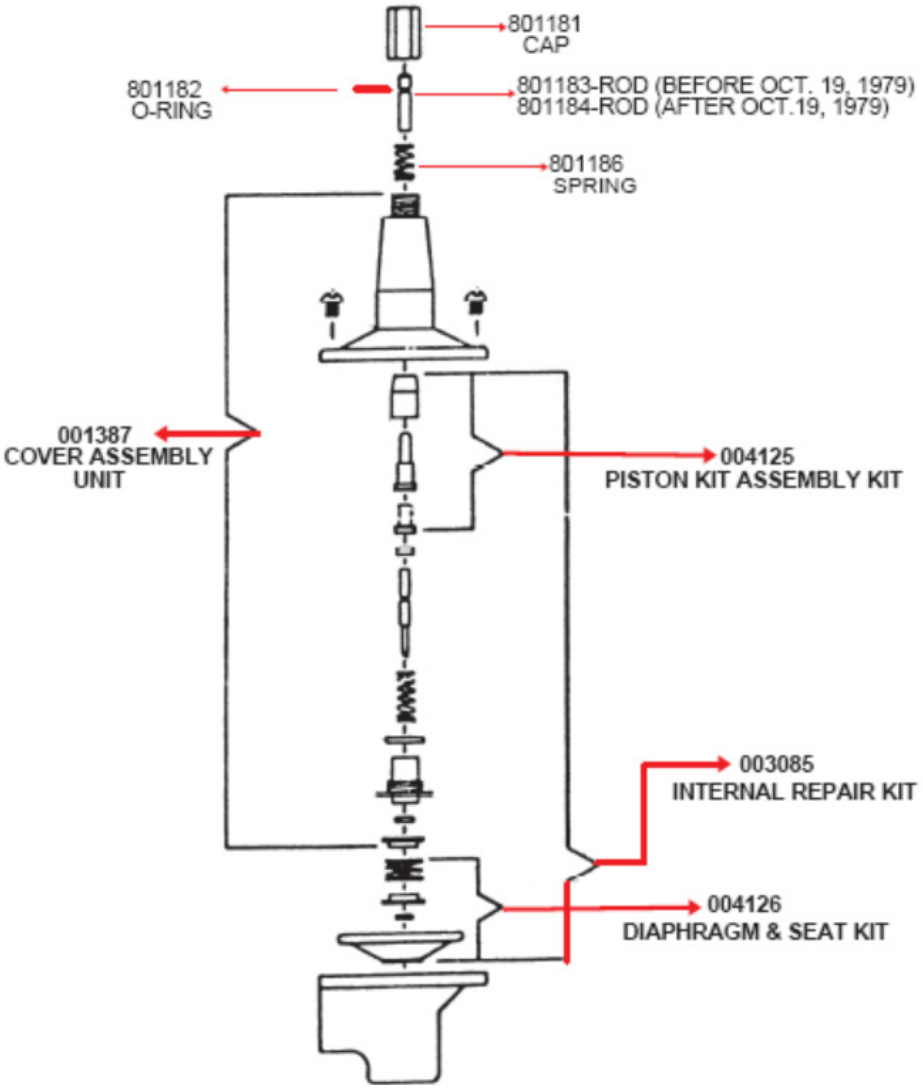

THIGH SOAP DISPENSER PISTON UNIT COMPLETE

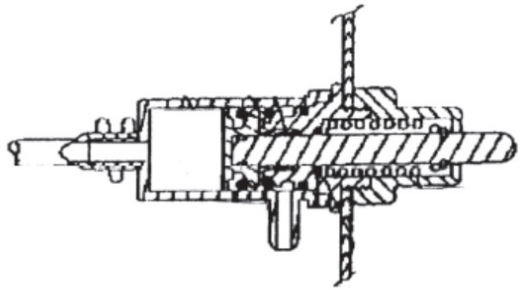

001045

THIGH SOAP DISPENSER NOZZLE UNIT

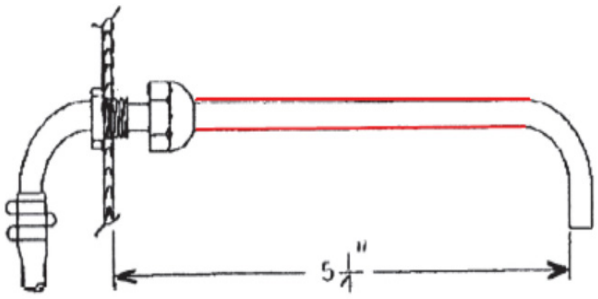

003445

CORALAIS - K-15181

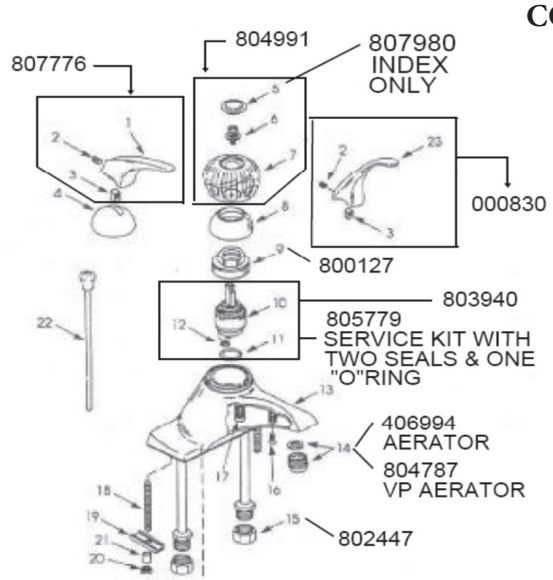

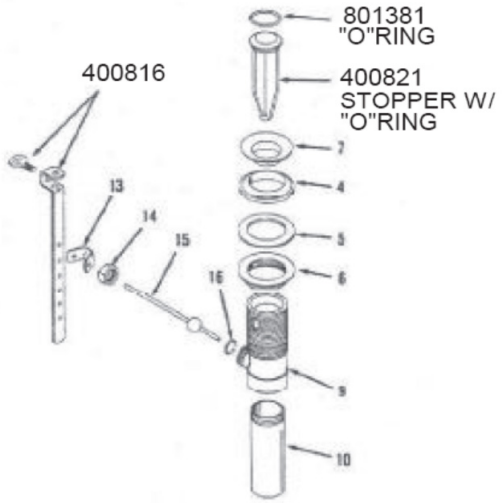

Kit Part #	Kit Name	Kit Contents
807776	Lever Handle Kit	1 ea., items 1, 2, &3
804991	Knee Handle Kit	1 ea., items 5, 6, & 7
803940	Valve Kit	1 ea., items 10 & 11; 2 ea., item 12
805779	Valve Service Kit	1 ea., item 11; 2 ea., item 12
406994	Aerator	1 ea., item 14
804787	Aerator (Vandal Proof)	1 ea., item 14
71507	Mounting Hardware	2 ea., items 19, 20, & 21
71667	Cap (Lever Handle)	1 ea., item 4
807980	Cap (Knee Handle)	1 ea., item 8
70341	Lift Rod	1 ea., item 22
70342	Lift Rod (Polished Brass & Colors)	1 ea., item 22
000830	Long Lever Handle Kit	1 ea., items 2, 3, & 23

Kit Part #	Kit Name	Kit Contents
402049	Ball Lever Assembly	1 ea., items 13 thru 16
400821	Stopper Assembly (Chrome)	1 ea., items 2 & 11
70407	Stopper Assembly (Brass)	1 ea., items 3 & 12
40245	Drain Assembly	1 ea., items 2, 4 thru 7, 9 & 11
806015	Ball Lever	1 ea., item 15
500165	Ball Lever (10-3/4")	1 ea., item 15

KOHLER CORALAIS - PRESSURE BALANCED SHOWER VALVE

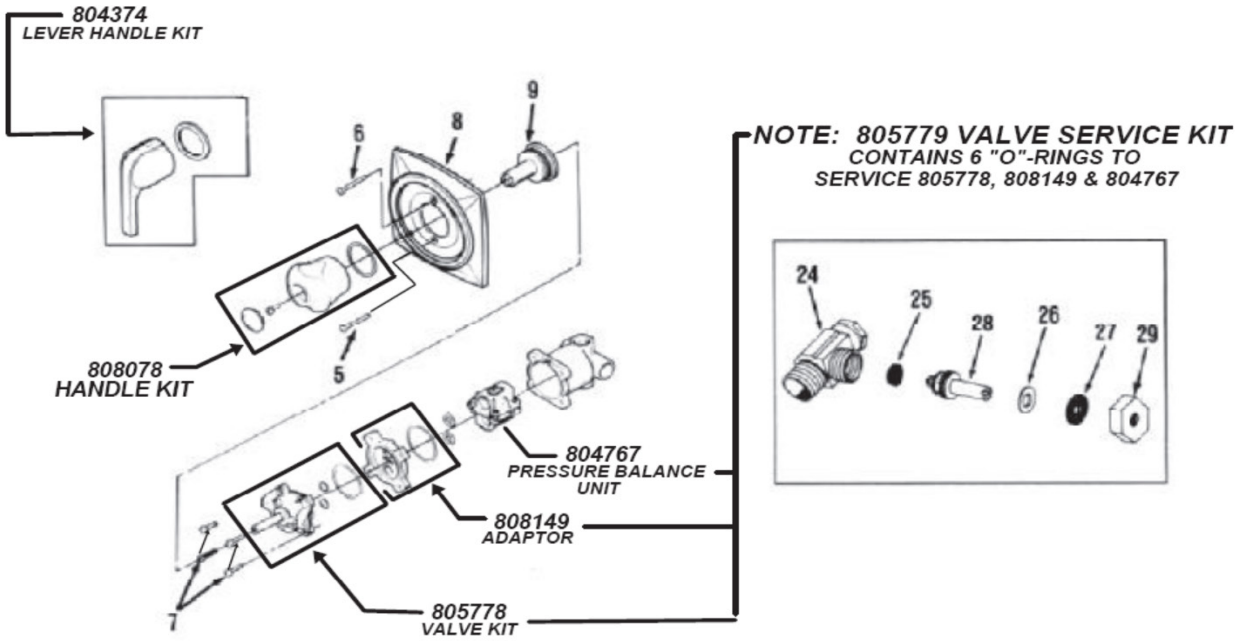

KOHLER - PLUMBING REPLACEMENT PARTS

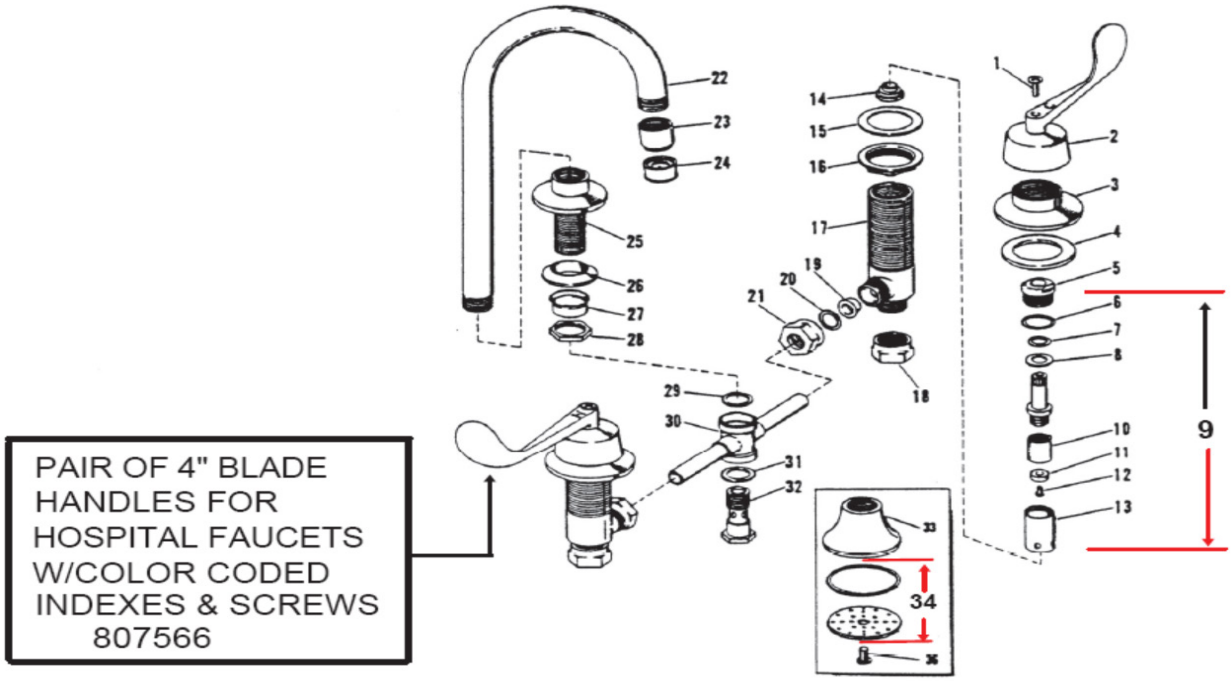

HOSPITAL LAVATORY FITTINGS
K-13341 - Lavatory Fitting w/ 4" Wrist Handles
K-13343 - Lavatory Fitting w/ 4" Wrist Handles
K- 13388 - Lavatory Fitting w/ Triton Handles

1	**802015**	Screw for 4" wrist handle	16	**802445**	Lock nut
	801466	Screw for Triton handle	17	**802446**	Valve body
2	**804986**	4" wrist handle (HOT)	18	**401168**	Coupling nut
	804985	4" wrist handle (COLD)	19	**801439**	Slip joint washer
3	**801457**	Escutcheon	20	**807610**	Friction Ring
4	**802444**	Washer	21	**802447**	Coupling nut
5	**800413**	Bonnet	22	**802448**	Spout
6	**801377**	"O" Ring	23	**801451**	Adaptor
7	**801577**	"O" Ring	24	**402050**	Aerator
8	**801422**	Washer	25	**802449**	Shank
9	**800260**	Hot Stem VALVET UNIT-BRASS	26	**801449**	Washer
	800265	Cold Stem VALVET UNIT-BRASS	27	**400105**	Spacer
10	**800775**	Hot Plunger w/seat washer & screw (Brass)	28	**401193**	Lock nut
	800770	Cold Plunger w/seat washer & screw (Brass)	29	**801448**	Gasket/Fiber, 3/32" Thick
11	**800050**	Seat Washer	30	**801426**	Cross Connection
12	**801125**	Screw	31	**800011**	Gasket
13	**805106**	Sleeve	32	**800414**	Clamping Nut
14	**800135**	Renewable seat (Brass)	33	**802450**	Body
	807597	Renewable seat (Monel)	34	**802451**	Spray Face Assembly
15	**801447**	Washer	36	**802453**	Screw

Order By Part Number, Not Item Number

KOHLER - PLUMBING REPLACEMENT PARTS

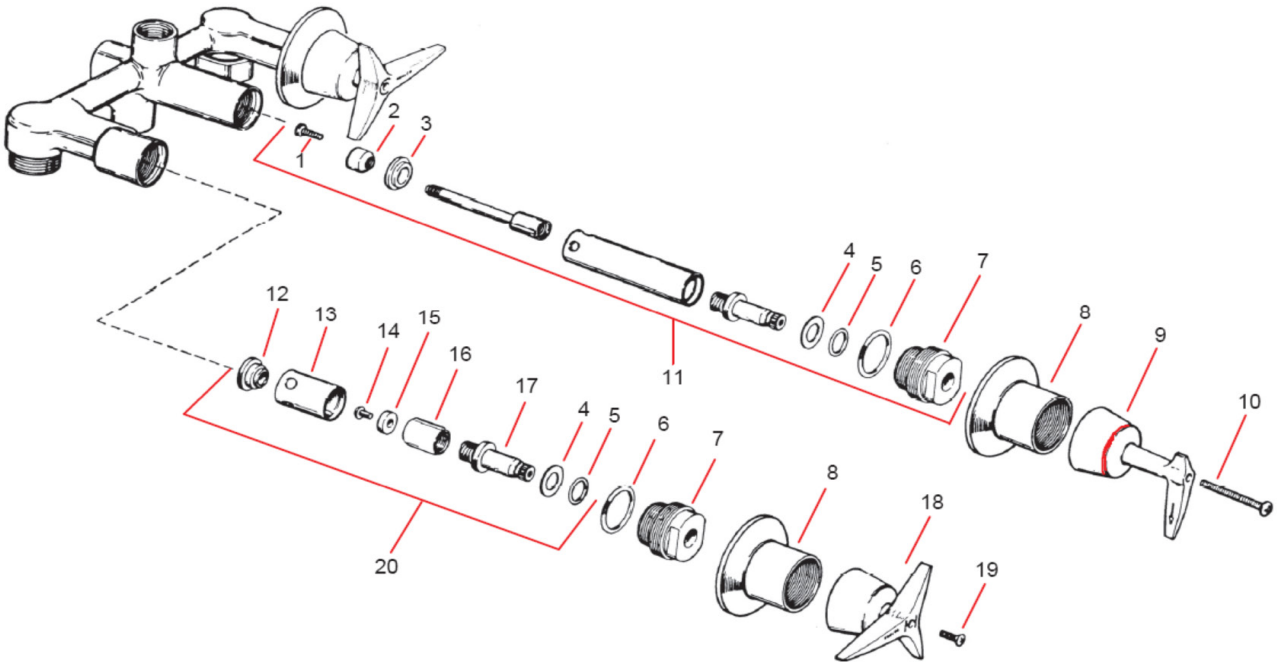

TRITON DIVERTER SHOWER AND BATH VALVE PARTS
K7014 Dalney Shower and Bath Fitting

1	**807571**	SCREW	11	**804310**	DIVERTER STEM ASSEMBLY
2	**803401**	SEAT FOR DIVERTER	12	**800135**	RENEWABLE SEAT
3	**803402**	RENEWABLE SEAT	13	**805106**	BARREL
4	**801422**	WASHER	14	**801125**	SCREW
5	**801577**	O-RING	15	**802105**	SEAT WASHER
6	**801381**	O-RING	16	**800770**	COLD PLUNGER
				800775	HOT PLUNGER
7	**801420**	BONNET NUT	17	***NLA**	USE #20
8	**804460**	ESCUTCHEON	18	**008474**	PAIR HANDLES - "H&C"
9	**803403**	DIVERTER HANDLE	19	**801462**	SCREW
10	**803404**	SCREW FOR HANDLE	20	**800260**	HOT STEM ASSEMBLY
				800265	COLD STEM ASSEMBLY

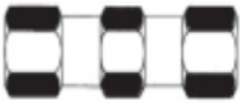

TUB STEM SOCKET WRENCH FOR THE VALVE ON THIS PAGE IS **200400**

KOHLER - TREND SHOWER & BATH VALVE REPLACEMENT PARTS

TREND VALVE REPAIR KIT
600667

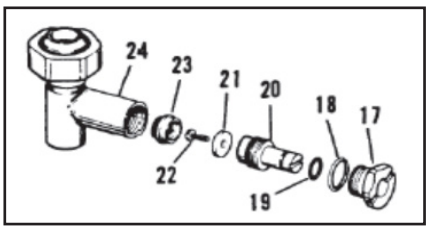

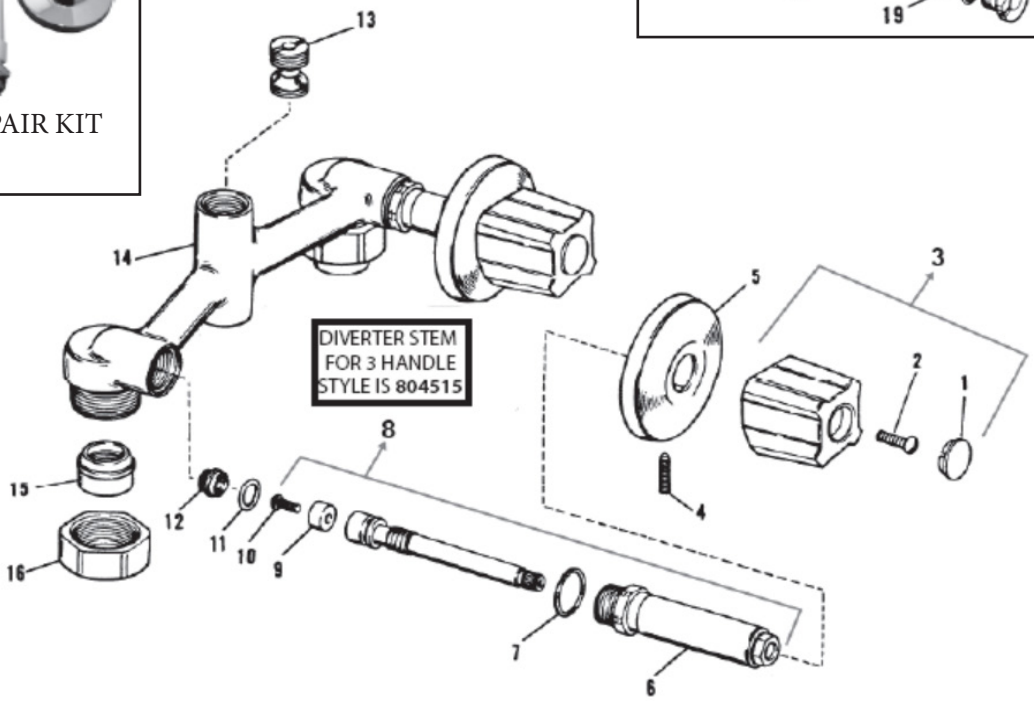

1	**806035**	PACK WITH HOT, COLD & DIVERTER (OEM)	15	**806106**	UNION JOINT FOR 1/2" I.P.S.
	801075	DIVERTER (GENERIC)		**806107**	UNION JOINT FOR 5/8" O.D. COPPER TUBE
	801077	HOT INDEX (GENERIC)	16	**806108**	UNION NUT
	801076	COLD INDEX (GENERIC)	17	**801442**	BONNET
2	**804913**	SCREW	18	**801583**	O-RING
3	**801100**	HOT HANDLE ASSEMBLY	19	**801120**	O-RING
	801101	COLD HANDLE ASSEMBLY	20	**801430**	STEM
4	**804577**	SET SCREW	21	**800820**	SEAT WASHER
5	**804987**	ESCUTCHEON	22	**807571**	SCREW
6	**20899**	BONNET W/20853 SLEEVE ORDER 803470	23	**803530**	SEAT
7	**806012**	WASHER	24	**806110**	BODY W/ SEAT & 806108 UNION NUT & 806106 UNION FOR 5/8" O.D. COPPER
8	**803470**	HOT/COLD STEM			
9	**803480**	WASHER		**806111**	SEAT WRENCH (NOT SHOWN)
10	**807571**	SCREW		**806112**	BONNET WRENCH (NOT SHOWN)
11	**801120**	O-RING	25	**801417**	SCREW
12	**800175**	RENEWABLE SEAT	26	**801435**	PAIR BLADE HANDLES (NEW STYLE) (NOT PICTURED)
13	**806104**	ASPIRATOR	FOLLOWING PARTS FOR: **806109** - STOP FOR 1/2" I.P.S. **806110** - STOP FOR 5/8" O.D. COPPER TUBE		
14	**806105**	BODY W/SEATS			

NOTE: **802415** STEM TO BE USED ONLY IN BLADE HANDLE SITUATION ROTATING OPPOSITE HOT STEM

GENERIC INDEX HAS "H" & "C" ON INDEX. OEM INDEX HAS ONLY RED & BLUE CIRCLE

KOHLER - LAVATORY FAUCET, 4" SPREAD

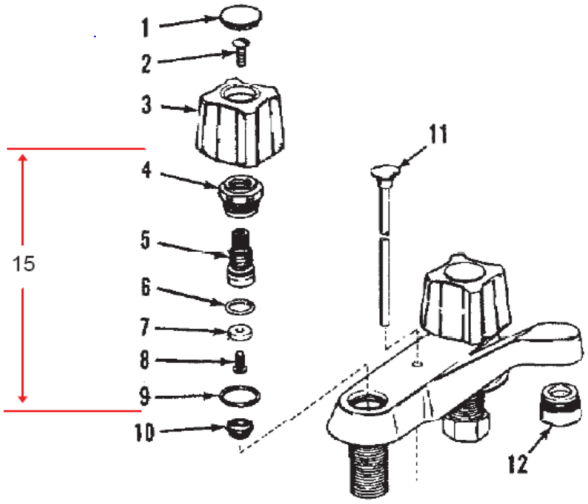

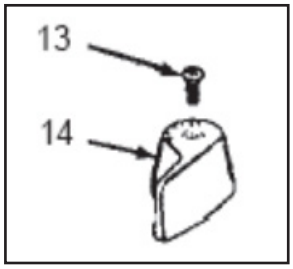

1	**801076**	COLD INDEX BUTTON	8	**801125**	BIBB SCREW
	801077	HOT INDEX BUTTON	9	**803777**	"O" RING
2	**807571**	BIBB SCREW	10	**800175**	SEAT
3	**801100**	HOT HANDLE	11	**401410**	LIFT ROD
	801101	COLD HANDLE	12	**402050**	AERATOR
4		ORDER #14	13	**804772**	HANDLE SCREW
5		ORDER #14	14	**801435**	HOT/COLD HANDLE KIT
6	**801120**	GASKET	15	**803025**	HOT/COLD STEM UNIT
7	**802105**	WASHER			

KOHLER - 4" SPR3EAD LAVATORY FAUCET
K-7401 CENTRA LAVATORY FITTING PARTS TRITON SERIES

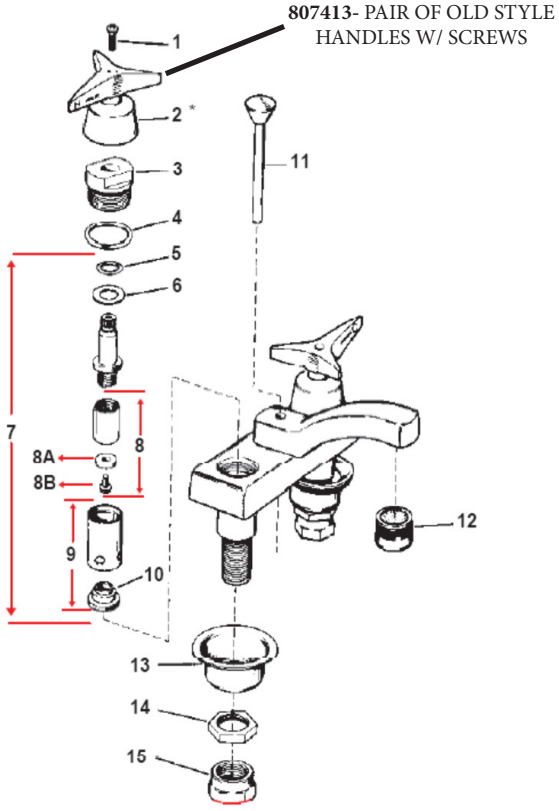

1	**801462**	HANDLE SCREW, 7/8" LONG
*2	NEW STYLE: USE **801432** HANDLE TO REPLACE OLD STYLE HOT OR COLD HANDLE USE **801436** INDEX KIT W/SCREWS & ADAPTORS	
*NOTE: **801432** IS ONE HANDLE AND REPLACES EITHER HOT OR COLD. **801436** INDEX KIT CONTAINS HARDWARE FOR BOTH HOT & COLD HANDLES.		
3	**801421**	BONNET
4	**801381**	O-RING
5	**801577**	O-RING
6	**801422**	BRASS WASHER
7	**800260**	HOT VALVE UNIT
	800265	COLD VALVE UNIT
8	**800775**	HOT INSERT
	800770	COLD INSERT
8A	**800050**	WASHER
8B	**805749**	BRASS SCREW
	801125	MONEL SCREW
9	**805106**	BARREL ASSEMBLY
10	**800135**	SNAP IN SEAT
11	**401410**	LIFT ROD
12	**402050**	AERATOR
13	**803215**	DEEP ROSETTE
14	**401193**	LOCK NUT
15	**401168**	SHANK NUT

KOHLER - SERVICE SINK FAUCET

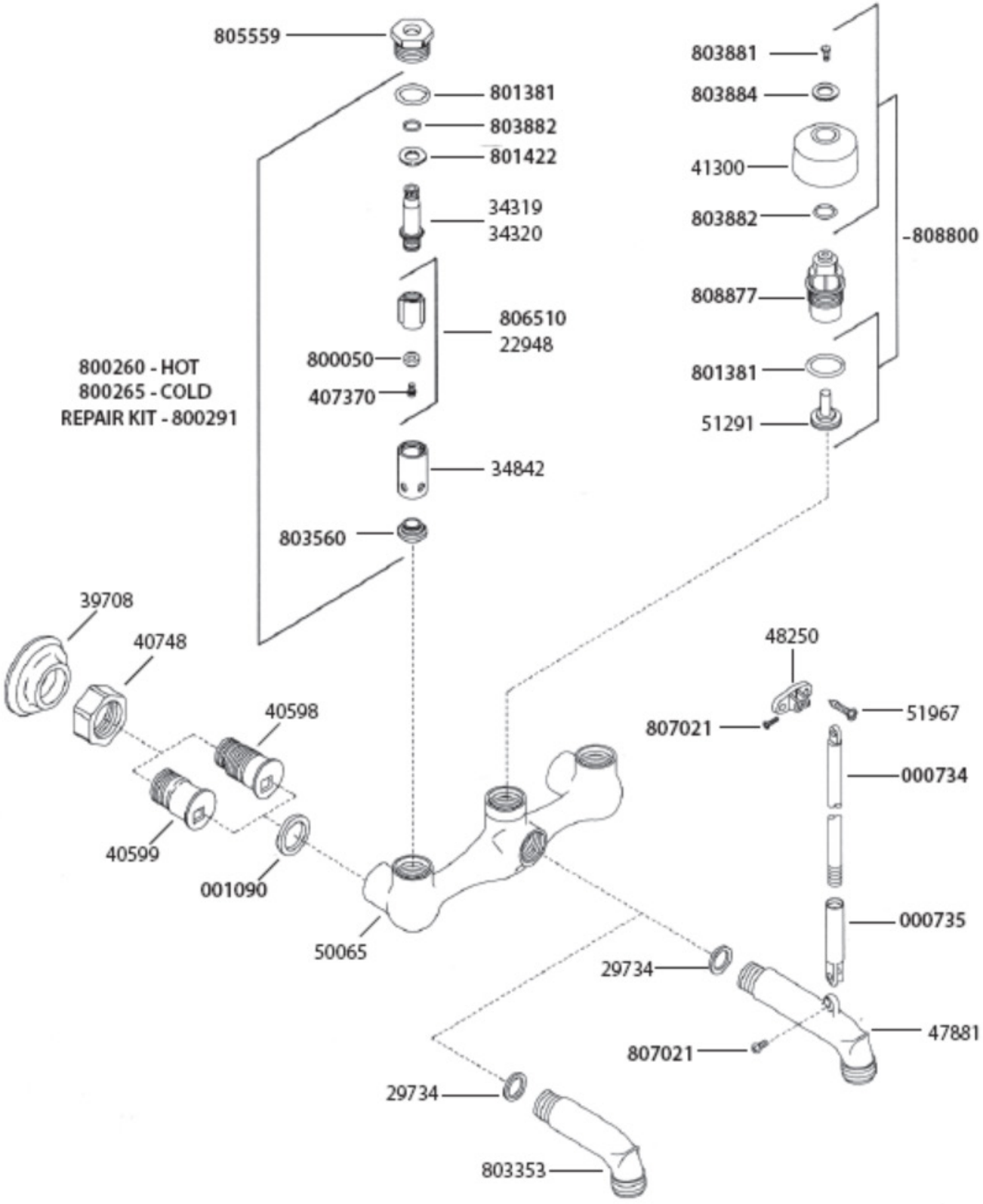

KOHLER - SERVICE PARTS (COMMERCIAL FITTINGS)

K-13808 FLOOR-MOUNTED PEDAL VALVE
K-13812 FLOOR-MOUNTED PEDAL VALVE (COLD WATER ONLY)

Ordering Options:

1	**A**
2	**802194**
3	**807577**
4	**36278**
5	**36277**
6	**807583**
7	**807582**
8	**807581**
9	**807580**
10	**36256**
11	**805088**
12	**805089**
13,14	**B**
15 thru 26	**C**
27 thru 31	**D**
32	**32338**
33	**E**
34	**36281**

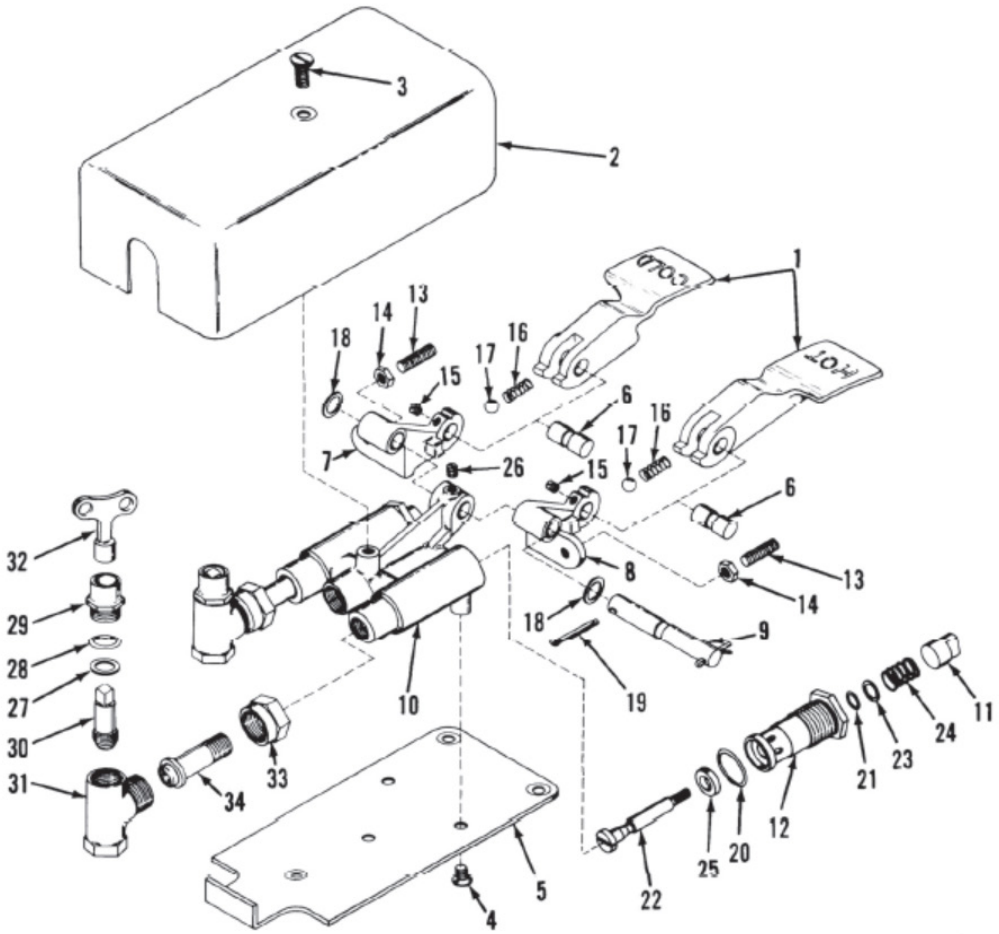

KIT	KIT PART #	KIT NAME	KIT CONTENTS
A	**802192**	FLOOR-MOUNTED PEDAL	1 ea. Hot, 1 ea. Cold; item 1
B	**805087**	SCREW & NUT	2 ea., items 13 and 14
C	**805086**	LINKAGE & VALVE REBUILDING	2 ea., items 15 thru 26
D	**802193**	STOP REBUILDING	2 ea., items 27 thru 31
E	**802447**	COUPLING NUT	2 ea., item 33

KOHLER - SERVICE PARTS (COMMERCIAL FITTINGS)

K-13816 FOOT-CONTROL MIXING VALVE
K-13817 FOOT-CONTROL MIXING VALVE (COLD WATER ONLY)

Ordering Options:

1	**807577**
2	**36279**
3	**807579**
4	**807583**
5 thru 16	**A**
17	**807582**
18	**807581**
19	**807580**
20	**805088**
21	**805089**
22	**B**
23	**36256**
24	**802447**
25	**36281**
26	**807578**
27 thru 32	**C**
33	**36278**
34	**36277**
35 thru 41	**D**
42	**20631**
43	**41326**

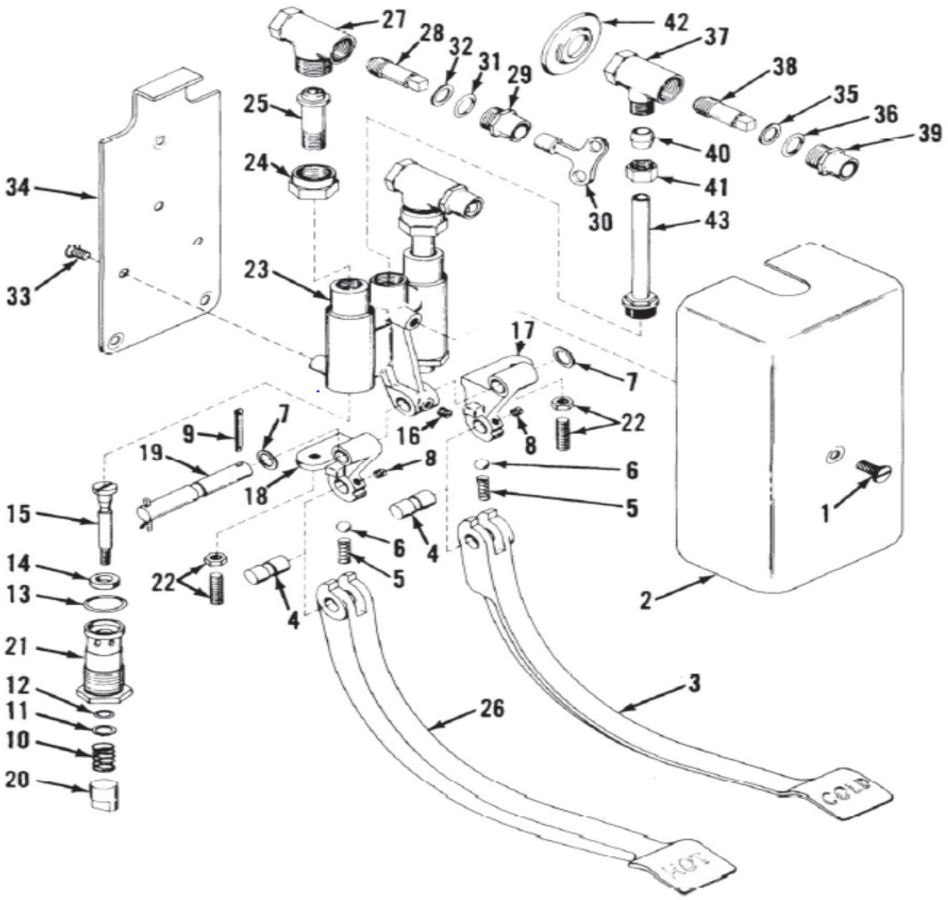

KIT	KIT PART #	KIT NAME	KIT CONTENTS
A	**805086**	LINKAGE & VALVE REBUILDING	2 ea., items 5 thru 16
B	**805087**	SCREW & NUT	2 ea., item 22
C	**35103**	LOOSE KEY STOP REBUILDING	1 ea., items 27 thru 30; 2 ea., items 31 & 32
D	**34167**	STOP REBUILDING	1 ea., items 37 thru 41; 2 ea., items 35 & 36

KOHLER - SERVICE PARTS KNEE VALVE (COMMERCIAL FITTINGS)

K-13710	NIEDECKEN	EXPOSED MIXER PARTS FOR KNEE ACTION FITTING
K-13715	NIEDECKEN	EXPOSED MIXER PARTS FOR KNEE ACTION FITTING

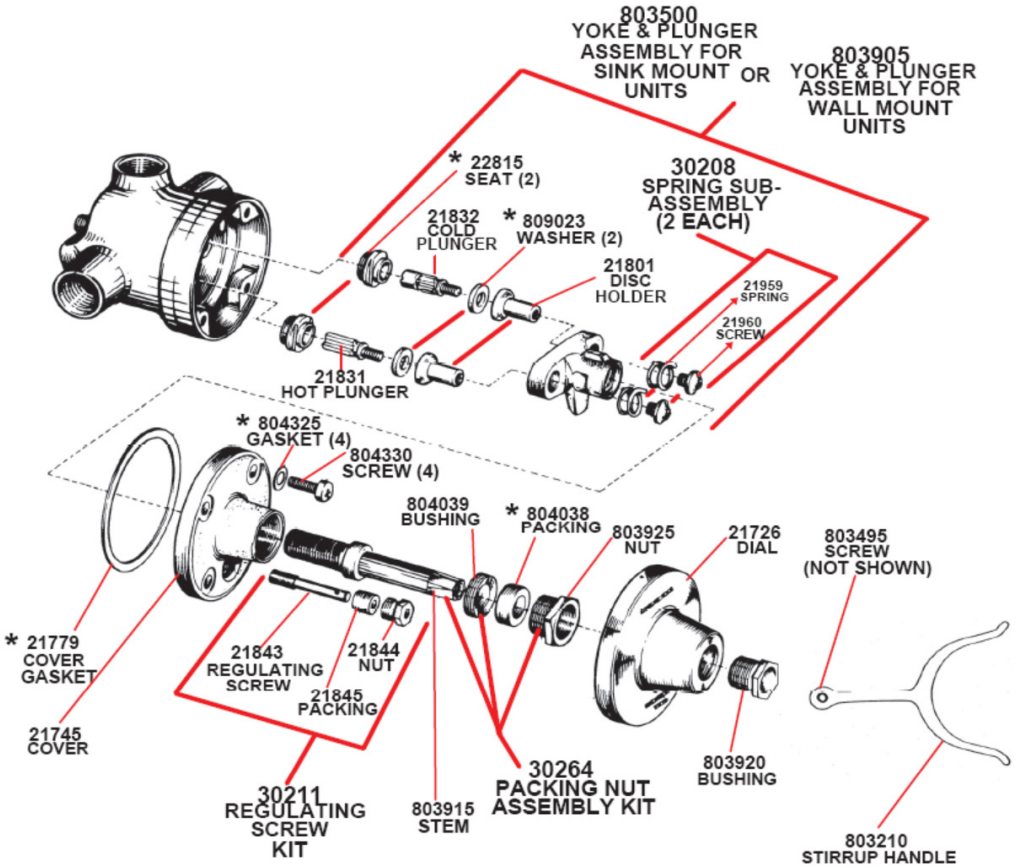

***ITEMS COME IN VALVE REBUILD KIT 803490**

IMPORTANT! - TWO TOOLS REQUIRED FOR VALVE SERVICE ARE A SEAT WRENCH #200790 AND A SPINDLE BUSHING WRENCH #200795

SINK MOUNT STYLE - **600042**

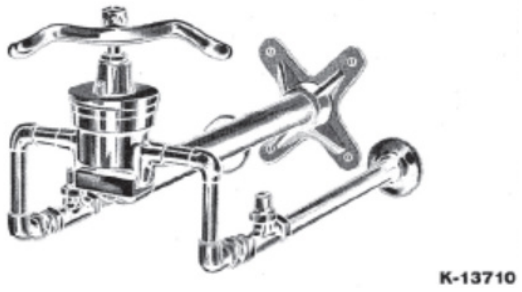

WALL MOUNT STYLE - **603350**

LEONARD
M-10-C, M10-CST, M-10-E
(AS FURNISHED WITH MODELS TM-456, MARK I, TM-504, TM-356, TM-203, TM-202, TM-140, TM-177A)

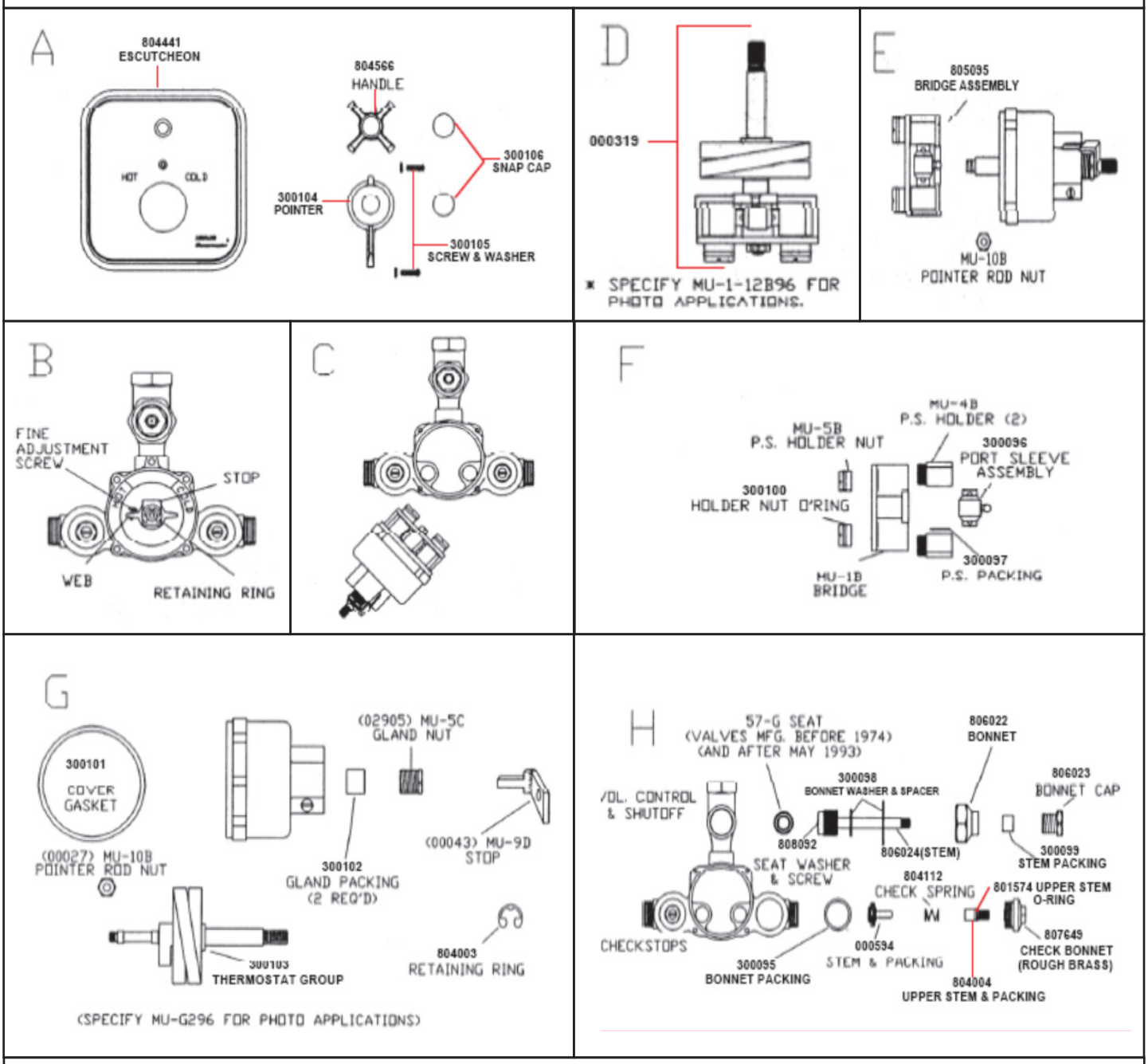

CHECKSTOPS

1. HOT WATER BY-PASSES INTO COLD LINE (OR COLD INTO HOT).
2. SUPPLIES CASNNOT BE SHUT OFF COMPLETELY.

STOP STEM REPAIR KIT **807650** INCLUDES:

(2) **300095** - BONNET PACKING
(2) **801574** - UPPER STEM "O" RING
(2) **000594** - STEM AND PACKING
(2) **804112** - CHECK SPRING

LEONARD
PAM II-ST, PAM II-E
PRESSURE ACTUATED MIXER - SERIAL NO. PAST **20390** & HIGHER
1/2" INLETS, 1/2" TOP OUTLET (1/2" BOTTOM OUTLET)

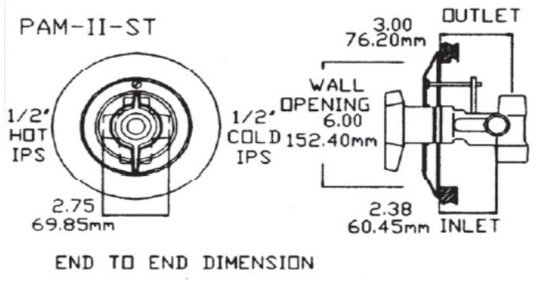

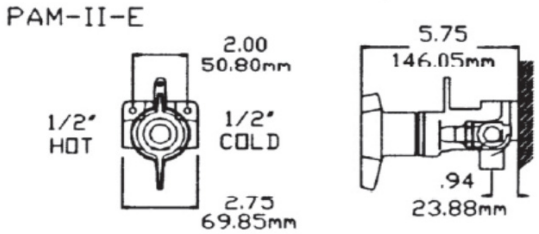

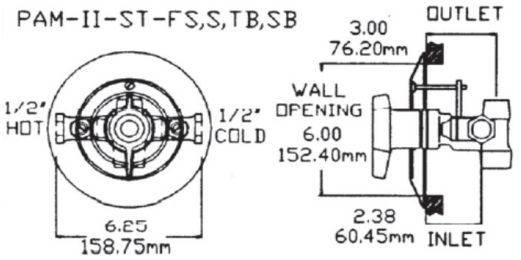

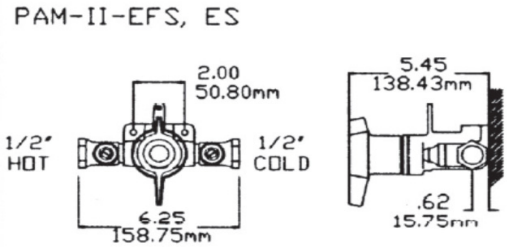

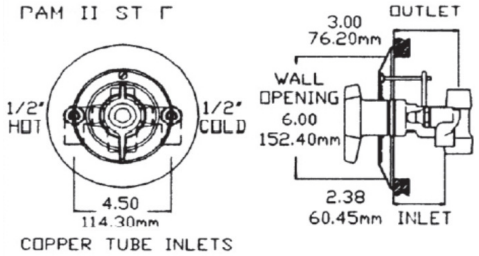

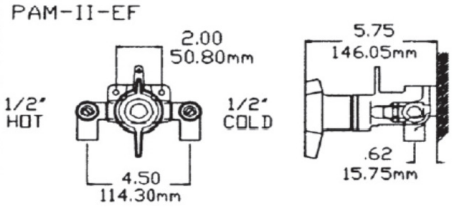

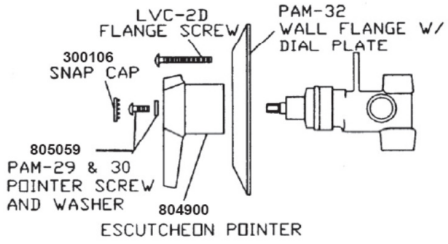

1.

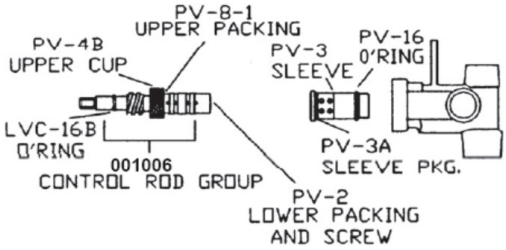

4.

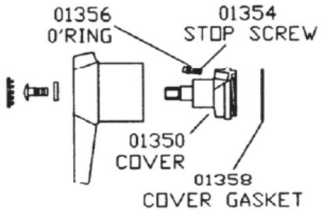

2.

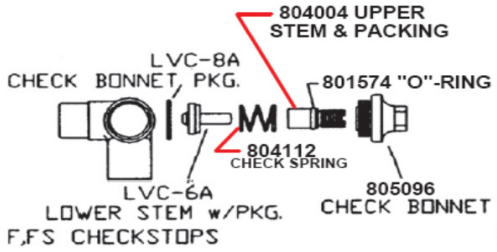

5.

3.

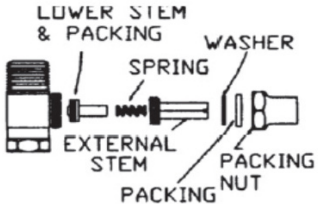

SB,TB CHECKSTOPS 6.

10

METCRAFT

PUSH BUTTON DIAPHRAGM ASSEMBLY - **920200**

PVK-1 VALVE KIT - **920215**

HAND HELD SHOWER ASSEMBLY

1	**500195**	SPRAY HEAD
2	**500197**	SWIVEL CONNECTOR
3	**500198**	S/S FLEXIBLE HOSE
4	**500196**	MOUNTING HOOK
5	**500183**	SUPPLY FLANGE
6	**500184**	ADAPTER
7	**500188**	VAC. BREAKER
8	**500189**	QUICK CONNECT

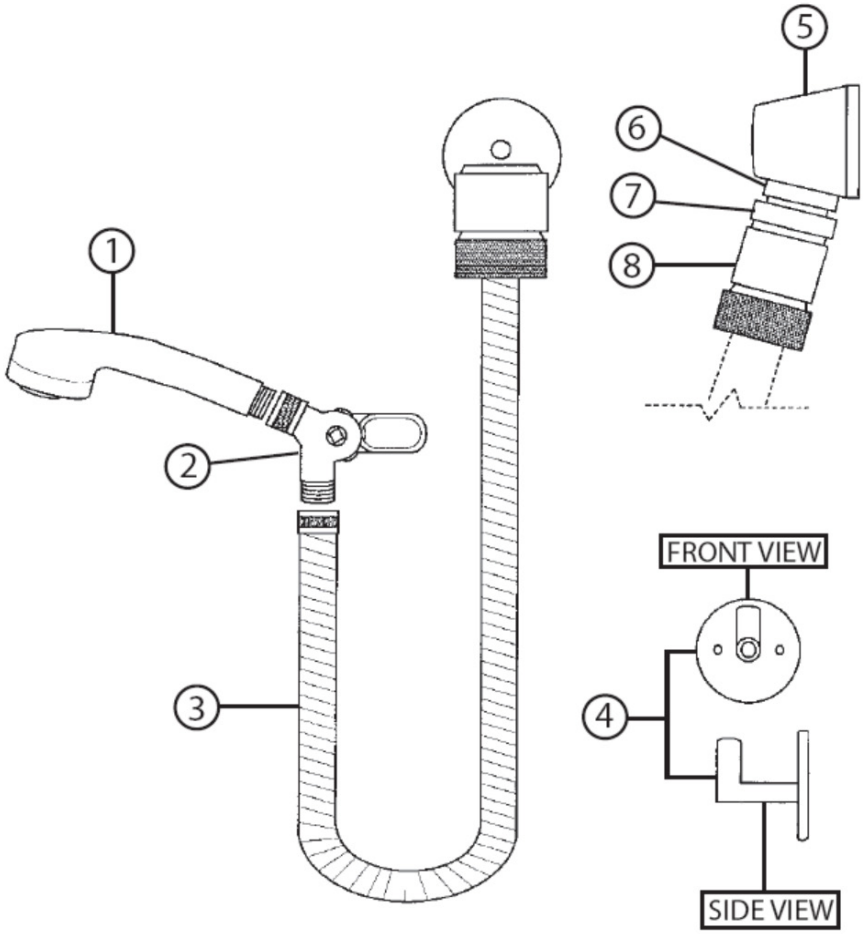

METCRAFT PARTS

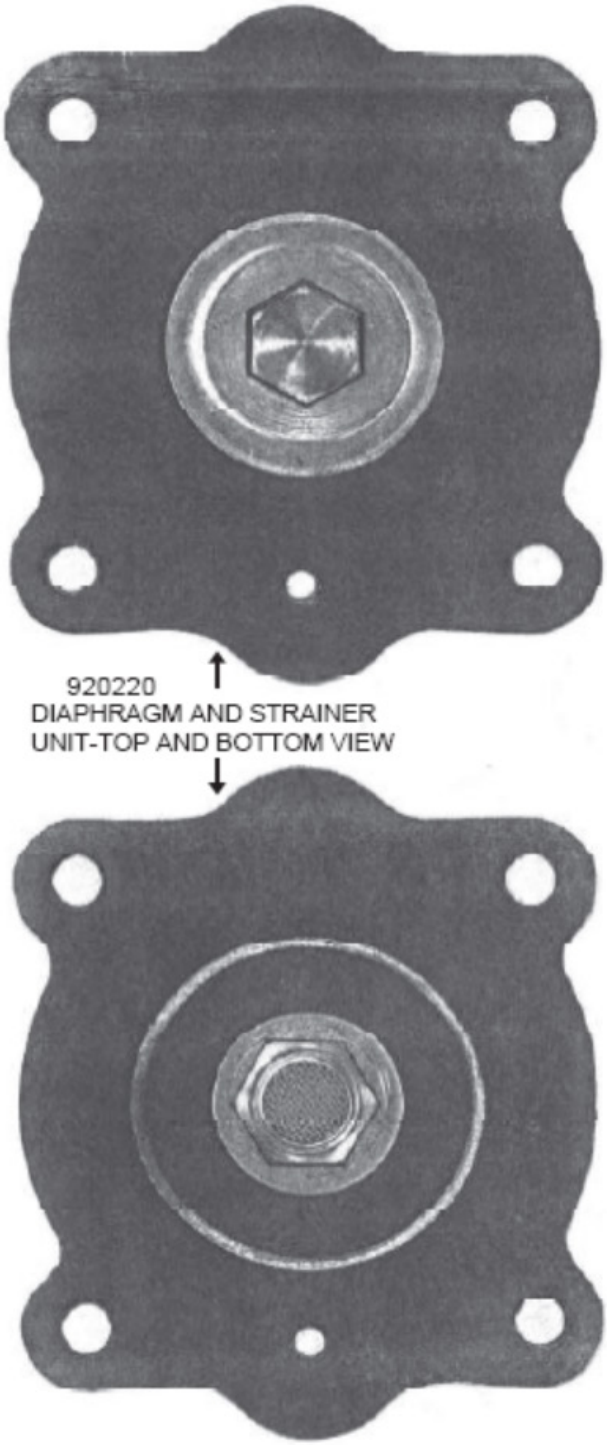

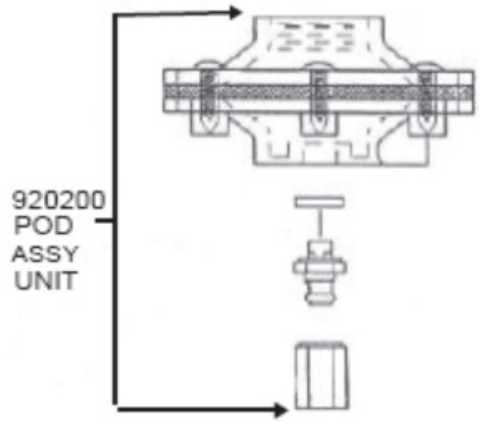

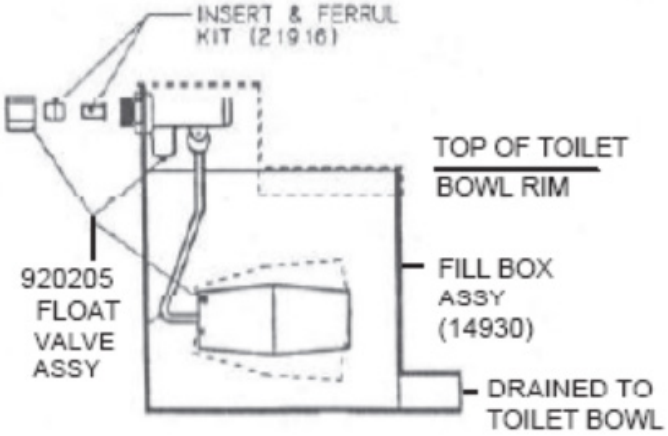

BRASS CHECK/STOP STRAINER
****NO LONGER AVAILABLE, USE 809089****

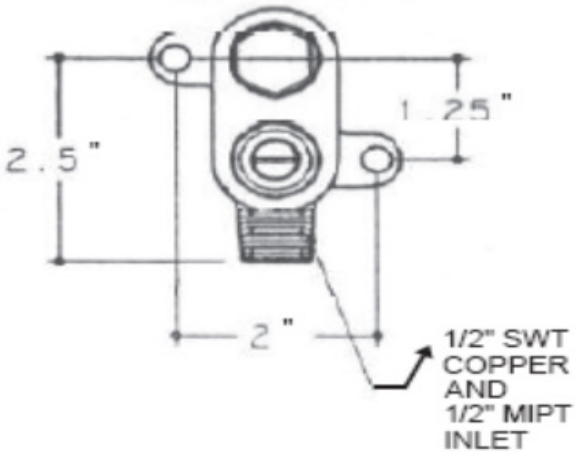

10

METCRAFT PARTS - PNEUMATIC AND METRO-FIT SERVO REPLACEMENT PARTS

NO.	PART #	DESCRIPTION	QTY.
A	**16918**	BRASS VALVE BASE	-
B	**N/A**	PLASTIC VALVE BASE (METRO-FIT)	-
1	**16977**	5/5 REPLACEMENT SEAT & O-RING	1
2	**920195**	KIT PVK-2 DIAPHRAGM ASSEMBLY	1
3	**16934**	WATER DIAPHRAGM ASSEMBLY	1
4	**16919**	ORIFICE PLATE ASSEMBLY	1
5	**16512**	ORIFICE PLATE ASSEMBLY (PLATED)	1
6	**16920**	ORIFICE PLATE SPRING	1
7	**920215**	KIT PVK-1 CUP ASSEMBLY	1
8	**19069**	1/8" TUBE ADAPTER	1
9	**15967**	CLAMP NUT	1
10	**????**	#8 LOCKWASHER	4
11	**16930**	#8 SCREW UNIFIED NATIONAL	4

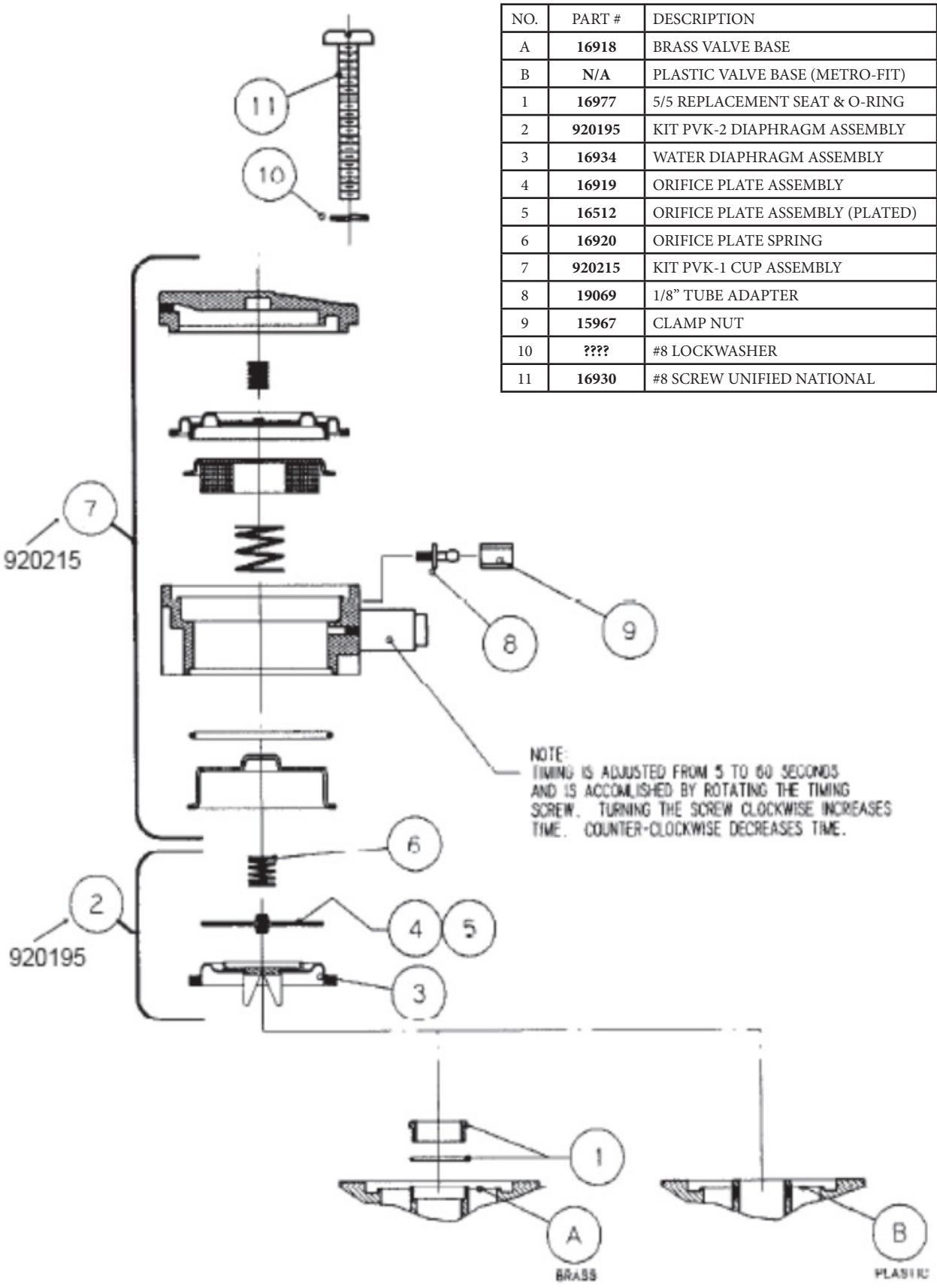

METCRAFT PARTS

EFFECTIVE 04-2022
SINGLE TEMPERATURE PNEUMATIC VALVES

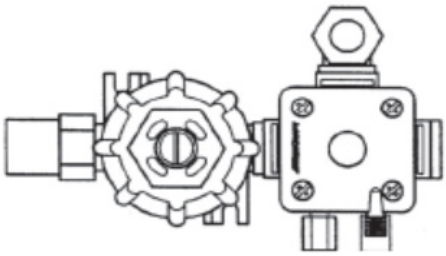

PART #	DESCRIPTION
920125	LAVATORY W/PUSHBUTTON .5 GPM
920126	LAVATORY W/O PUSHBUTTON .5 GPM
920127	SHOWER W/ PUSHBUTTON 2.5 GPM
920128	SHOWER W/O PUSHBUTTON 2.5 GPM

EFFECTIVE 04-2022
SINGLE TEMPERATURE PNEUMATIC VALVES

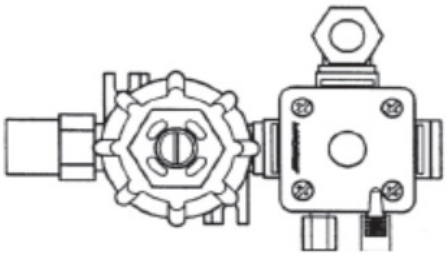

PART #	DESCRIPTION
920125	LAVATORY W/PUSHBUTTON .5 GPM
920126	LAVATORY W/O PUSHBUTTON .5 GPM
920127	SHOWER W/ PUSHBUTTON 2.5 GPM
920128	SHOWER W/O PUSHBUTTON 2.5 GPM

EXPLODED VIEW OF HYDRAULIC DIAPHRAGM VALVES USED WITH METCRAFT #166 ANTI-FLOOD DEVICE

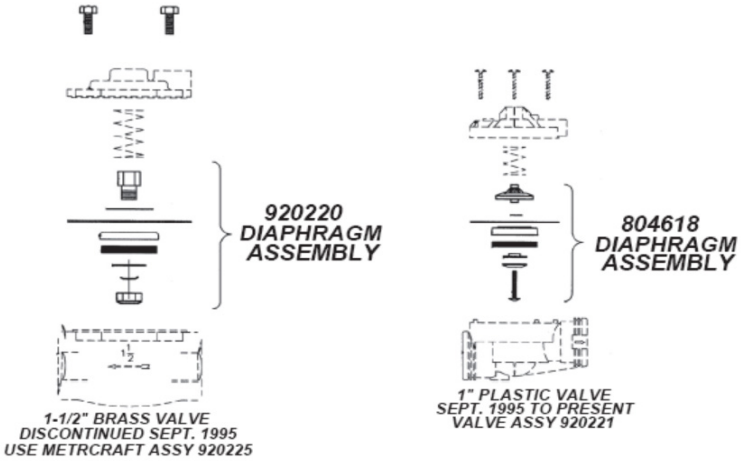

NOTE: Individual parts are NOT sold separately! (Except for diaphragm assemblies)

NON-METERING CARTIDGE

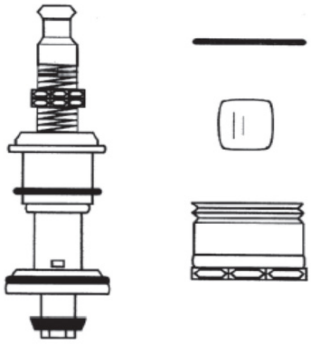

606334
NON-METERING
CARTRIDGE KIT

QTY.	DESCRIPTION
1	FIBER WASHER
1	NYLON SPACER
1	CAP NUT
1	NON-METERING CARTRIDGE

EFFECTIVE 04-2002

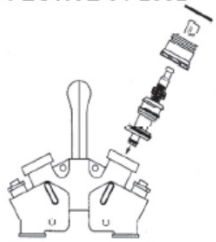

Complegte valve has been discontinued and is no longer available. Use either the single or dual temperature valves shown at the top of this page.

NOTE: Individual parts are NOT sold separately!

MIXET

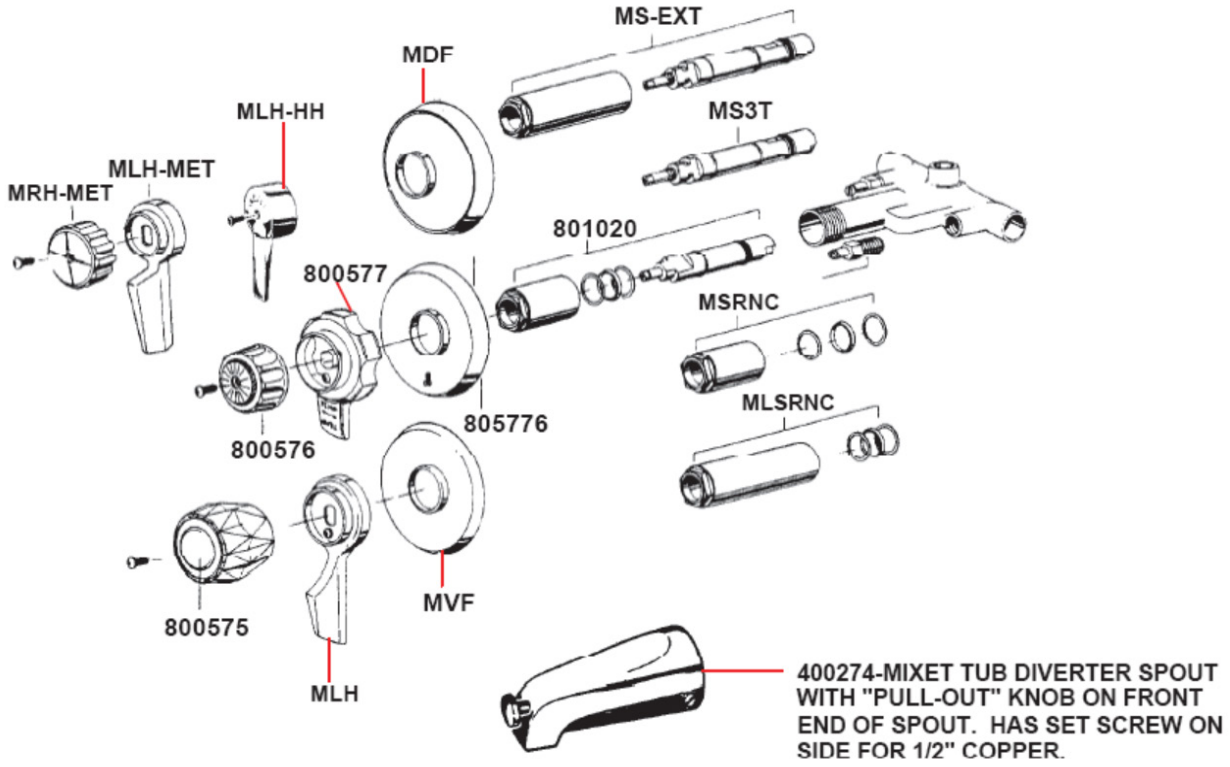

MOEN

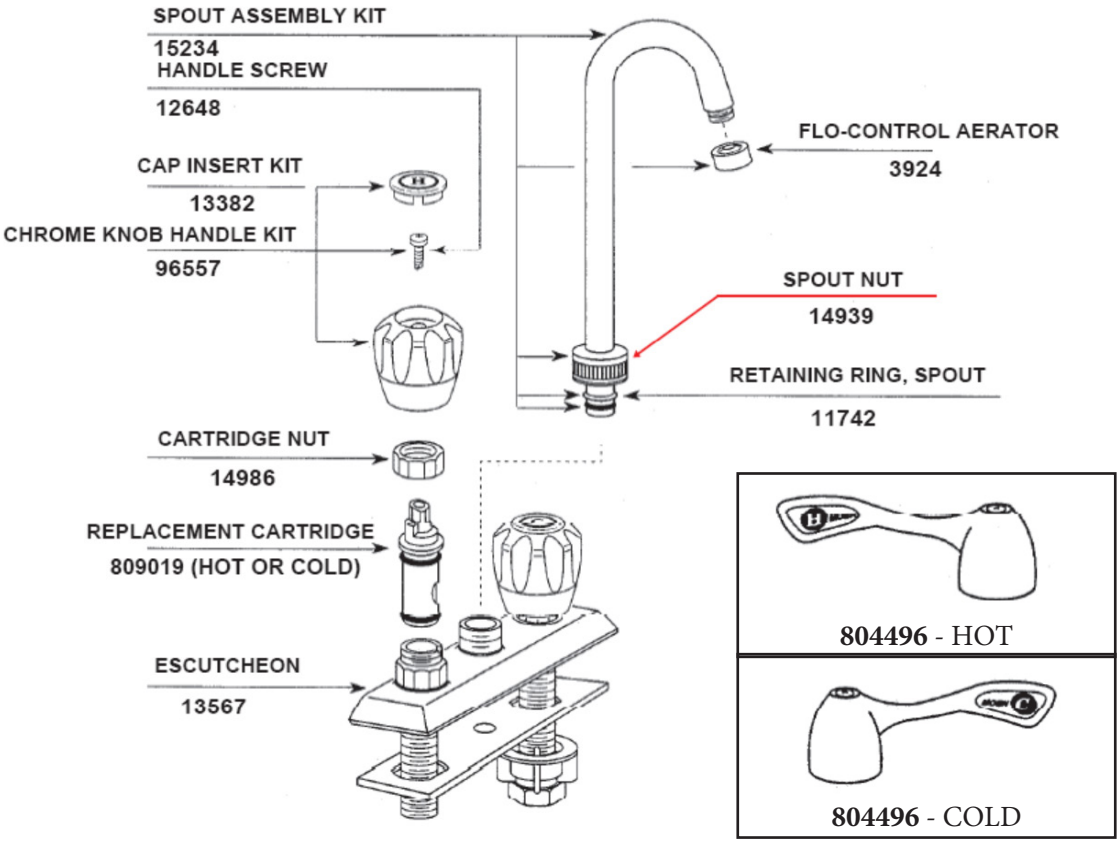

10

LEGEND BY MOEN - SINGLE-HANDLE LAVATORY FAUCET (CHROME - 4400-4420)

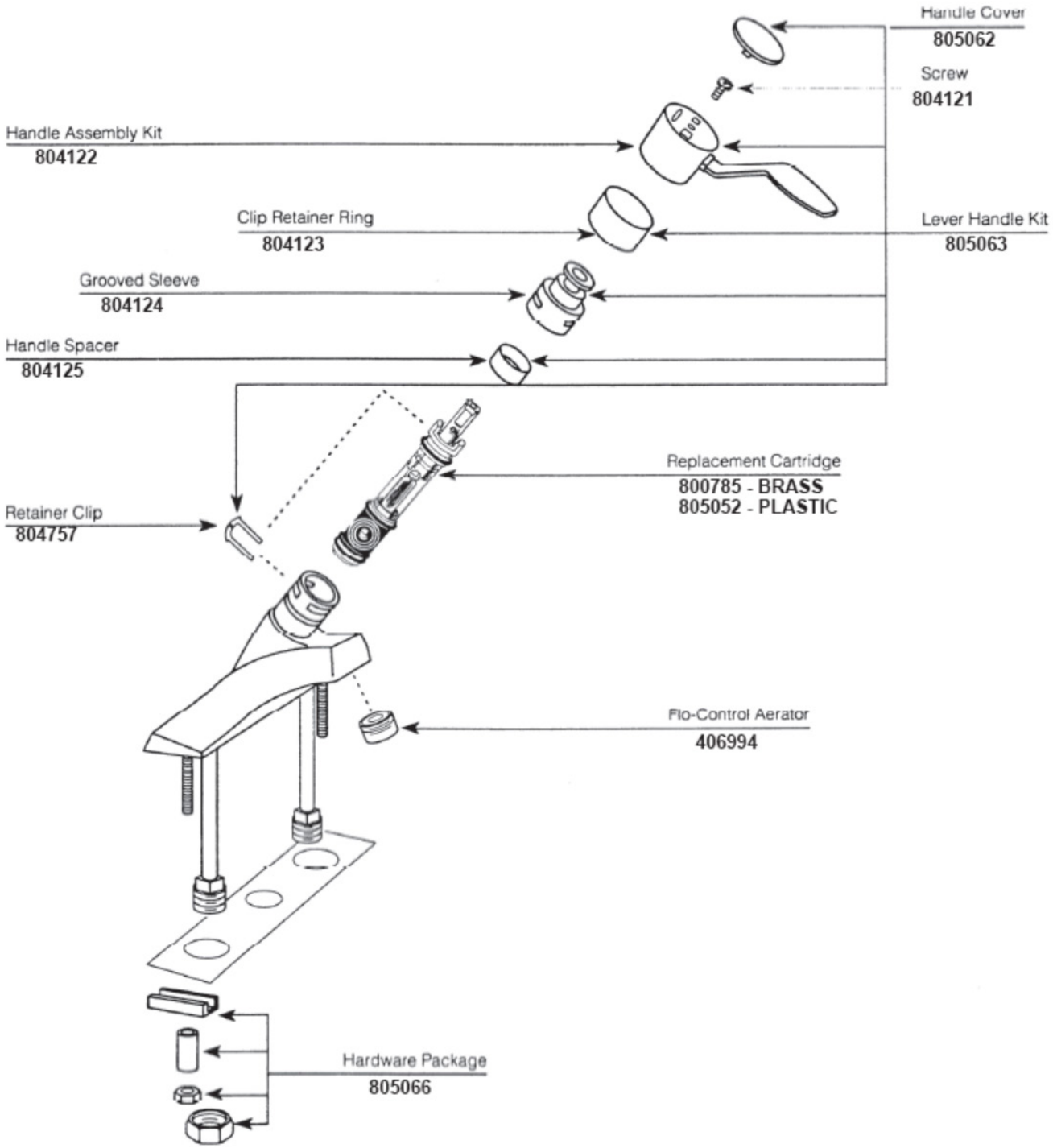

CHATEAU BY MOEN - POSI-TEMP SINGLE-HANDLE TUB & SHOWER VALVES
(CHROME - T187, T188, T189, T190, T191, 2320, 2325, 2339, 2370, 2375, 2389)
(POLISHED BRASS - T187-P, T188-P, T189-P, T190-P, 2320-P, 2325-P, 2339-P, 2370-P, 2375-P, 2389-P)

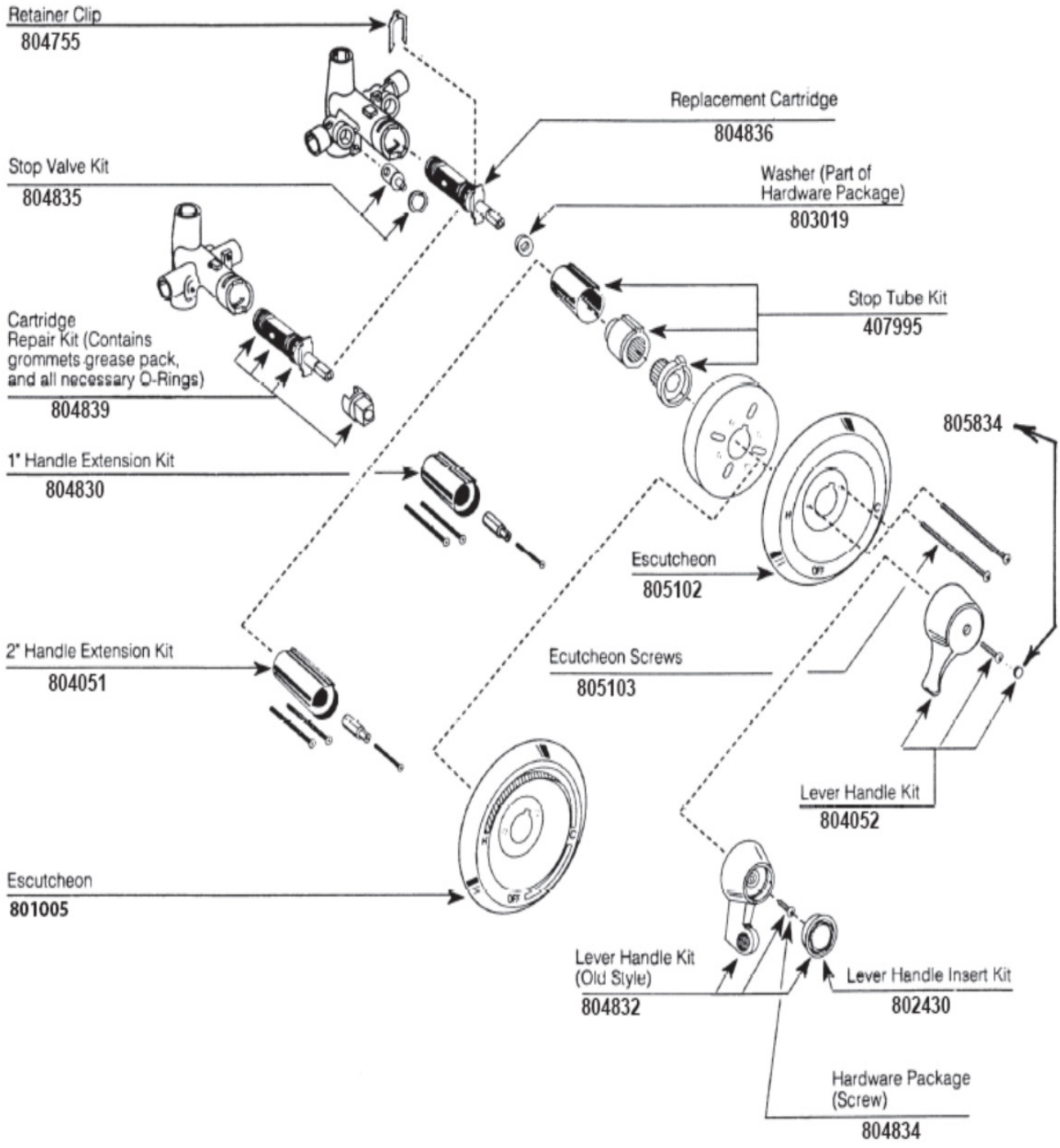

10

CHATEAU BY MOEN - SINGLE-HANDLE LAVATORY FAUCET
CHROME- L4625, LEVER
POLISHED BRASS- L4625P, LEVER

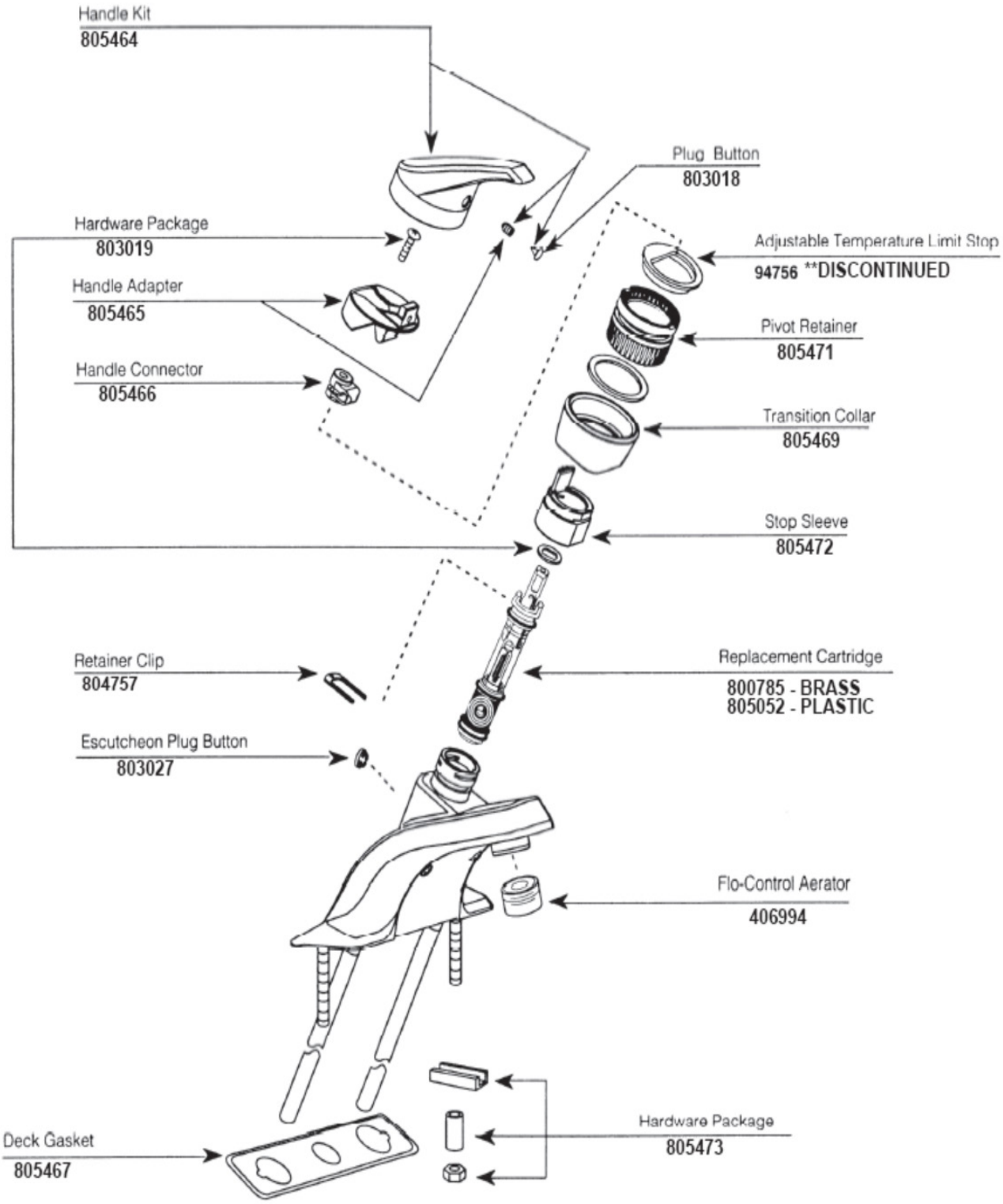

400 SERIES - POWERS LEVER, HANDLE AND TRI-HANDLE ASSEMBLY

1-2 LEVER HANDLE ASSEMBLY (MODELS 8-9)		
1a	LEVER HANDLE	
1b	SLEEVE	
2	LEVER HANDLE SCREW	**410-365**
3a-3d TRI-HANDLE ASSEMBLY (ALL MODELS 1-9)		
3a	TRI-HANDLE	**410-191**
3b	WASHER	**046-008K**
3c	SCREW	**030-070**
3d	PLUG BUTTON (NS)	**410-195**
3-7 ACRYLIC HANDLE ASSEMBLY		
3	PLUG BUTTON AND INSERT	**420-314**
4	HANDLE SCREW 8-23x 3/4”	**034-515K**
5	WASHER	**227-197**
6a	ACRYLIC HANDLE KNOB	
6b	SLEEVE	**227-196**
7	KNOB INSERT	**420-213**

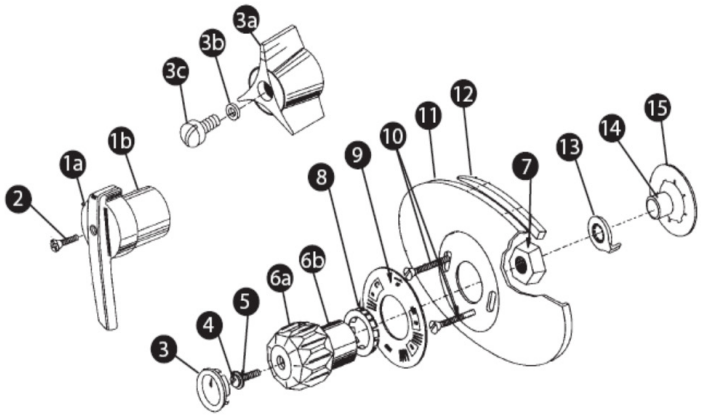

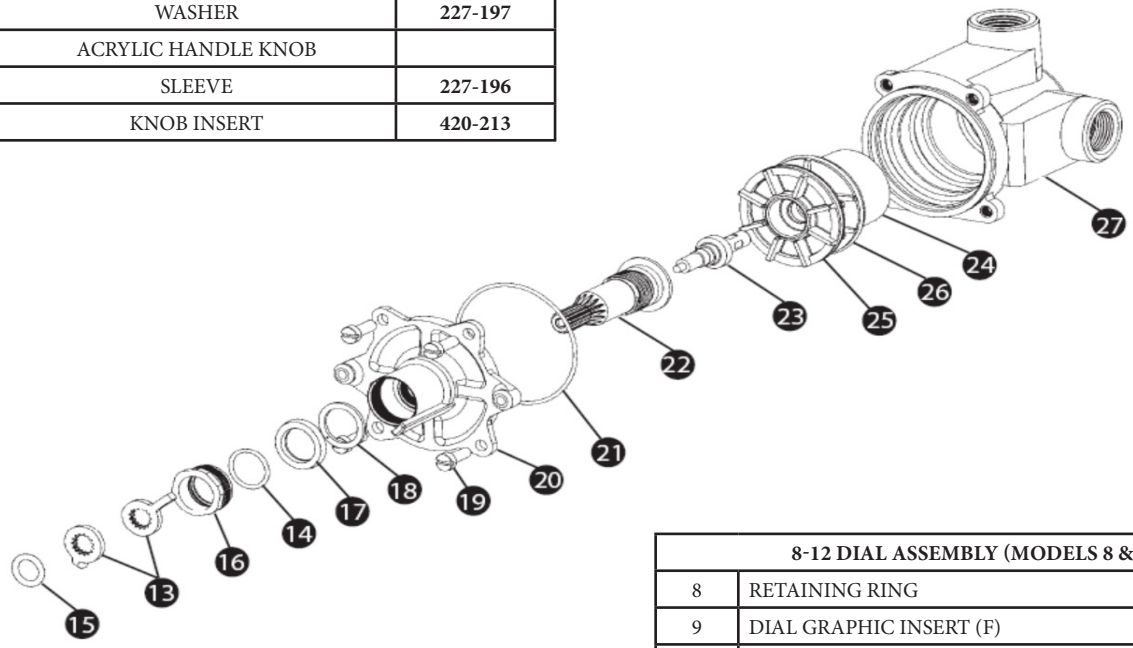

8-12 DIAL ASSEMBLY (MODELS 8 & 9)		
8	RETAINING RING	**227-116**
9	DIAL GRAPHIC INSERT (F)	**420-308**
10	DIAL PLATE SCREWS: (CONSEALED) 8-32 x 1-1/2” (2)	**080-013**
11	DIAL PLATE (OVAL)	**420-166**
12	DIAL GASKET	**410-284**
13	TEMP STOP	**047-124**
14	O-RING	**084-014**
15	O-RING	**047-128**
16	PACKING GLAND	**420-578**
17	HUVA CUP	**225-404**
18	PACKING STOP RING	**420-210**
19	BONNET SCREWS	**030-887**
20	BONNET	**420-210**
21	O-RING	**047-128**
22	ADJUSTMENT STEM	**420-139**
23	THERMAL ACTUATOR	**420-024**
24	CARTRIDGE ASSEMBLY	**420-140**
25	O-RING	**047-029**
26	O-RING	**047-129**
27	VALVE BODY	**N/A**

304418 - MOTOR UPGRADE KIT

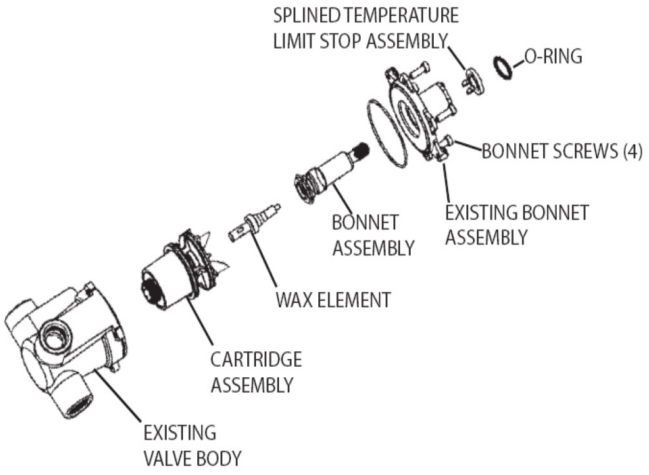

SLOAN - OPTIMA PLUS 605300 FAUCET

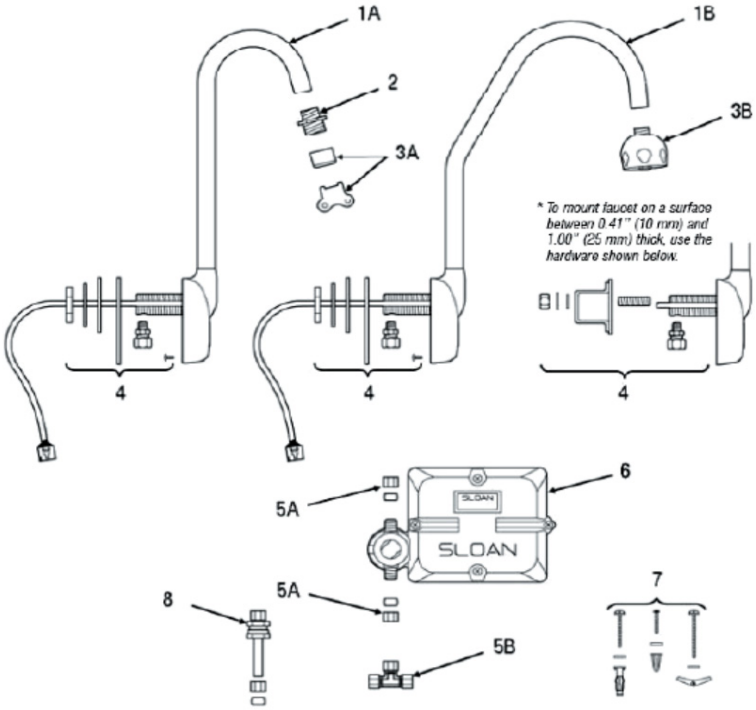

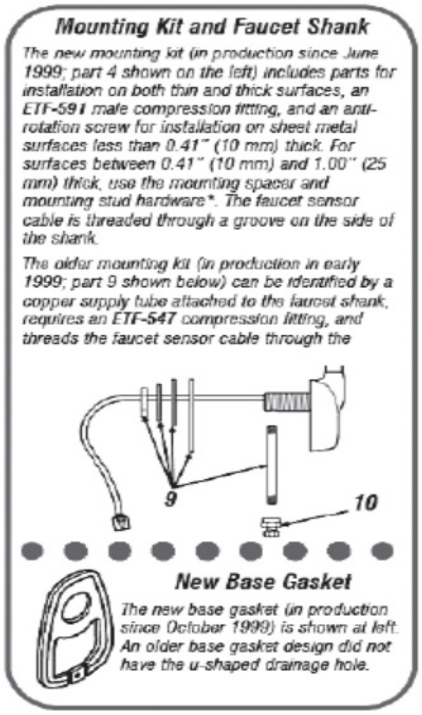

ITEM #	ACS #	SLOAN #	DESCRIPTION:
1A		**EBF-94-A**	FAUCET AND SENSOR ASSEMBLY WITH STANDARD SPOUT (605300)
1B		**EBF-95-A**	FAUCET AND SENSOR ASSEMBLY WITH SURGICAL BEND GOOSENECK SPOUT (EBF-550-S)
2	**920605**	**ETF-178**	ADAPTER FOR SPRAY HEADS (NOT REQUIRED FOR AC-55-A SHOWER SPRAY HEAD)
3A	**920603**	**ETF-1020-A**	0.5GPM SPRAY HEAD WITH KEY (FEMALE THREAD)
	802343	**ETF-1022-A**	2.2GPM AERATOR SPRAY HEAD WITH KEY (FEMALE THREAD)
	402764	**ETF-237**	2.2GPM LAMINAR FLOW SPRAY HEAD (FEMALE THREAD)
	920604	**ETF-435**	REPLACEMENT KEY ONLY FOR 920603 0.5GPM SPRAY HEAD AND 802343 2.2 GPM AERATOR SPRAY HEAD (NOT REQUIRED FOR 402764 2.2GPM LAMINAR FLOW SPRAY HEAD)
3B		**AC-55-A**	SHOWER SPRAY HEAD ASSEMBLY, 2.2GPM
4		**EBF-110-A**	FAUCET MOUNTING KIT INCLUDES BASE GASKET, LARGE FLAT WASHER, LARGE LOCKWASHER, LARGE NUT, MOUNTING SPACER, MOUNTING STUD, SMALL FLAT WASHER, SMALL NUT, ANTI-ROTATION SCREW, AND ETF-591 - COMPRESSION FITTING CONNECTOR (MALE)
		ETF-591	1/8" NPT PIPT TO 3/8" TUBE MALE COMPRESSION FITTING CONNECTOR
5A		**EBF-113-A**	SINGLE SOLENOID SUPPLY KIT INCLUDES (2) COMPRESSION NUTS, (2) COMPRESSION SLEEVES, SCREW-DRIVER
5B		**ETF-259**	3/8" TEE COMPRESSION FITTING
6	**920656**	**EBF-60-A**	CONTROL MODULE ASSEMBLY INCLUDES BASE ENCLOSURE COVER ENCLOSURE, (2) GASKETS, SOLENOID BODY, SOLENOID ENCLOSURE, SOLENOID FILTER CAP, AND BATTERY STOP
7		**EBF-79-A**	MOUNTING HARDWARE KIT FOR CONTROL MODULE ASSEMBLY INCLUDES, (4) ANCHOR NUTS, (4) TOGGLE NUTS, (4) MOUNTING SCREWS FOR BASE PLATE, (4) FLAT WASHERS, (4) ANCHORS AND (4) METAL SCREWS
8	**803639**	**ETF-470-A**	BACK CHECK
9		**EBF-110-A**	OLD FAUCET MOUNTING KIT INCLUDES 3/8" WATER SUPPLY TUBE, BASE GASKET, LARGE FLAT WASHER, LARGE LOCKWASHER, LARGE NUT AND ETF-547 COMPRESSION FITTING CONNECTOR (ORDER ITEMS 4 AND 10 AS REPLACEMENT PARTS)
10		**ETF-547**	1/8" NPT PIPE TO 3/8" TUBE FEMALE COMPRESSION FITTING CONNECTOR
		EBF-107-A	SENSOR HOUSING AND CABLE ASSEMBLY REPLACEMENT KIT
	809408	**EBF-62-A**	SOLENOID REPLACEMENT KIT INCLUDES SOLENOID BODY, SOLENOID ENCLOSURE, AND SOLENOID FILTER CAP
		EBF-1004-A	SOLENOID FILTER REPLACEMENT KIT INCLUDES FILTER SCREEN ASSEMBLY AND O-RING
		EBF-1006-A	REPAIR KIT FOR EBF-60 CONTROL MODULE ASSEMBLY INCLUDES EBF-61-A BATTERY HOLDER ASSEMBLY ND - EBF-159 BATTERY GASKET
		EBF-50-A	CONTROL MODULE REPLACEMENT GASKETS (2 REQUIRED)

SLOAN - OPTIMA PLUS 604200 FAUCET

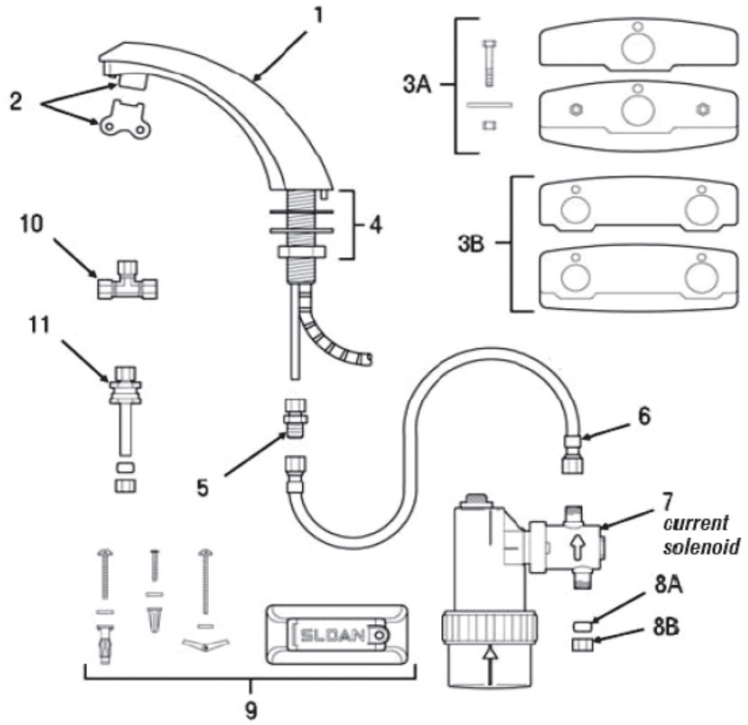

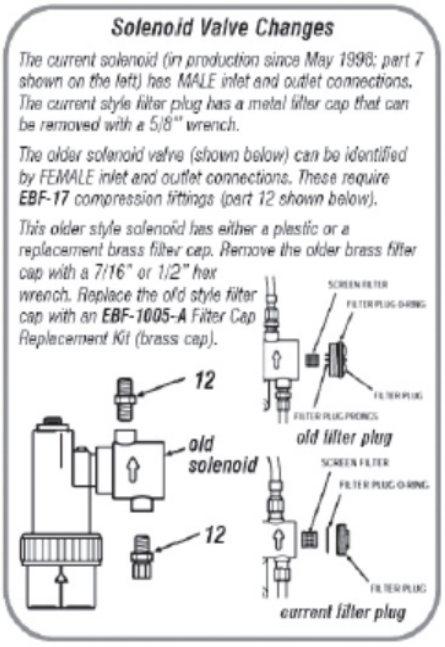

ITEM #	ACS #	SLOAN #	DESCRIPTION:
1		**EBF-10-A**	FAUCET AND SENSOR ASSEMBLY (604200)
		EBF-179-A	FIBER OPTIC SENSOR CABLE ASSEMBLY ONLY (REPLACES EBF-12-A)
		EBF-1009-A	FIBER OPTIC SENSOR CABLE ASSEMBLY ONLY (REPLACES EBF-12-A, INCLUDES LENS HOLDER)
	920603	**ETF-1021-A**	0.5GPM SPRAY HEAD WITH KEY (FEMALE THREAD)
2	**802343**	**ETF-1022-A**	2.2GPM AERATOR SPRAY HEAD WITH KEY (FEMALE THREAD)
	402764	**ETF-237**	2.2GPM LAMINAR FLOW SPRAY HEAD (FEMALE THREAD)
	920604	**ETF-435**	REPLACEMENT KEY ONLY FOR 920603 0.5GPM SPRAY HEAD AND 802343 2.2GPM AERATOR SPRAT HEAD (NOT REQUIRED FOR 402764 2.2GPM LAMINAR SPRAY HEAD)
3A		**ETF-295-A**	4" CENTERSET TRIM PLATE KIT FOR FAUCET (FAUCET ONLY) INCLUDES: (2) NUTS, (2) HEX SCREWS, (2) FLAT WASHERS, SINGLE HOLE COVER PLATE, AND CP BASE PLATE
3B		**ETF-299-A**	4" CENTERSET TRIM PLATE KIT FOR FAUCET WITH OPTIONAL MIXING VALVE INCLUDES: (2) NUTS, (2) HEX SCREWS, (2) FLAT WASHERS, DUAL HOLE COVER PLATE, AND CP BASE PLATE
4		**ETF-290-A**	FAUCET MOUNTING KIT INCLUDES: RUBBER GASKET, MOUNTING WASHER, MOUNTING NUT, AND ETF-297 COMPRESSION FITTING CONNECTOR
5		**ETF-297**	1/4" TO 3/8" COMPRESSION FITTING CONNECTOR
6		**MIX-19**	20" FLEX HOSE
7	**920657**	**EBF-11-A**	SOLENOID VALVE MODULE ASSEMBLY INCLUDES SOLENOID ENCLOSURE, SOLENOID BOY AND FILLER CAP
8A		**ETF-208**	3/8" FERRULE
8B		**ETF-209**	3/8" COMPRESSION NUT
9		**EBF-25-A**	MOUNTING BRACKET KIT INCLUDES: BASE PLATE, WALL BRACKET BASE, WALL BRACKET, MOUNTING SCREW, SELF-TAPPING SCREW, (2) WOOD SCREWS, WASHERS AND PLASTIC ANCHORS, (2) SCREWS PLUS WASHERS AND HOLLOW WALL ANCHORS
10		**ETF-259**	3/8" TEE COMPRESSION FITTING CONNECTOR
11	**803639**	**ETF-470-A**	BACK CHECK
12		**EBF-17**	3/8 TO 1/4 COMPRESSION FITTING CONNECTOR
		EBF-1001-A	SOLENOID FILTER REPLACEMENT KIT FOR OLD SOLENOID INCLUDES FILTER SCREEN ASSEMBLY & O-RING
		EBF-1004-A	SOLENOID FILTER REPLACEMENT KIT FOR CURRENT SOLENOIED INCLUDES FILTER SCREEN ASSEMBLY & O-RING
		EBF-1005-A	FILTER CAP ASSEMBLY FOR OLD SOLENOID INCLUDES METAL FILTER COVER & O-RING

SPEAKMAN - REPAIR PARTS LISTING FOR COMMANDER WIDESPREAD GOOSENECK FAUCET W/ 4" WRIST HANDLES

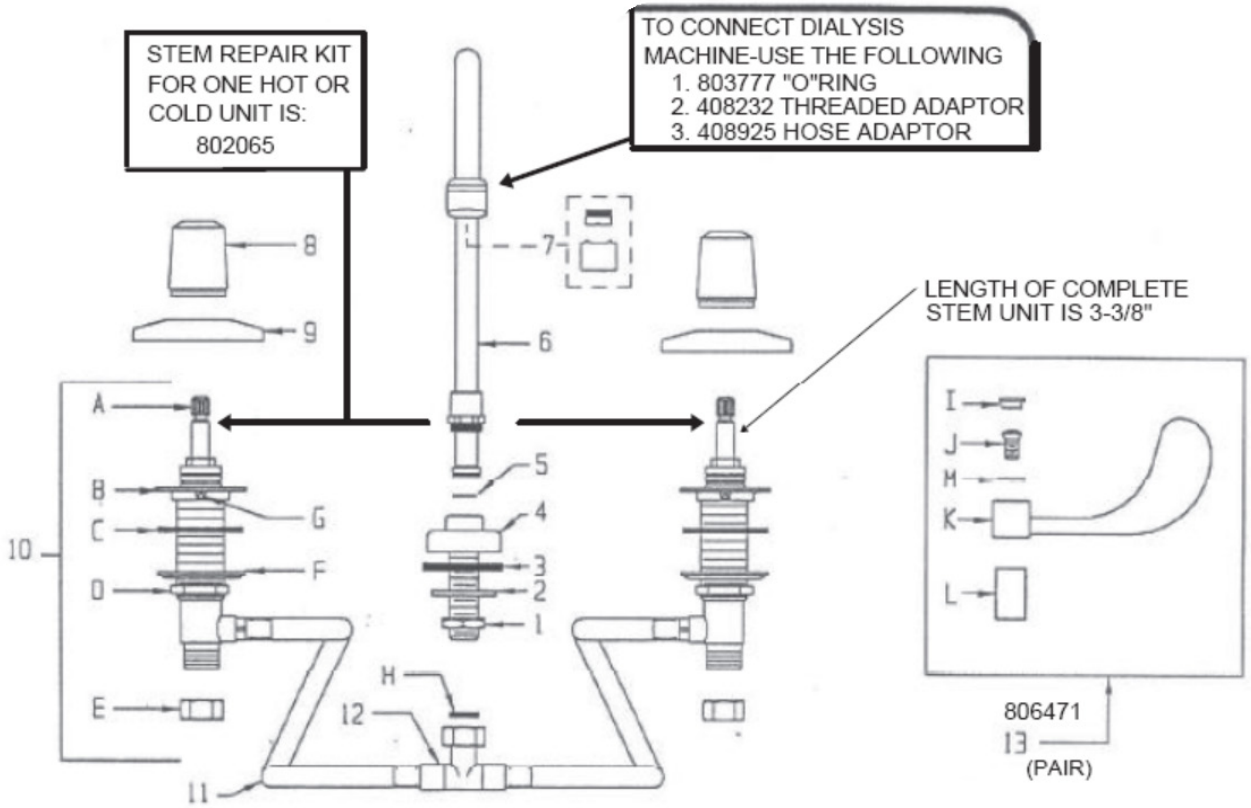

1	**808203**	SHANK NUT
2	**808204**	NOZZLE SPACER
3	**808205**	CHANNEL WASHER
4	**G26-0034**	BASE W/LIFT ROD HOLE (SC-3014)
	G26-0036	BASE W/O LIFT ROD HOLD (SC-3004)
5	**808206**	WASHER FOR RIGID CONNECTION
6	**801007**	GOOSENECK NOZZLE ASSY. G18-0198 NOZZLE, 02-0147 COLLAR, 05-1813 BUSHING, 49-0077 O-RING
7	**808207**	STANDARD AERATOR W/ WRENCH
	05-1917	AERATOR
	05-1899	WRENCH
8	**02-0142**	TRIM COLLAR (2)
9	**26-0233**	TRIM FLANGE (2)
10	**808201**	BODY ASSY W/ RED MTG (HOT/LEFT)
	808202	BODY ASSY W/ BLUE MTG (COLD/RIGHT)

A	**801301**	RED VALVE MTG (HOT/LEFT)
	801300	BLUE VLAVE MTG (COLD/RIGHT)
B	**808212**	FLANGED NUT
C	**808213**	RUBBER WASHER
D	**808214**	LOCKNUT
E	**01-0075**	COUPLING NUT
F	**45-0697**	CUP WASHER
G	**48-0293**	SET SCREW
	20-0946	VALVE BODY INSERT (NOT SHOWN)
	49-0138	O-RINGS (2) NOT SHOWN
11	**808208**	FLEX HOSE (2)
12	**808209**	TEE ASSEMBLY
H	**808210**	RUBBER WASHER
13	**806471**	4" WRIST HANDLES - PAIR
I	**808144**	RED INDEX
	808145	BLUE INDEX
J	**48-0305**	8-32 SCREW (2)
K	**04-0472**	4" WRIST HANDLE (2)
L	**05-1828**	SLEEVE (2)
M	**45-0686**	LOCKWASHER (2)

SPEAKMAN - REPAIR PARTS LISTING FOR COMMANDER SERVICE SINK FITTING SC-5815 & SC-5815-RCP

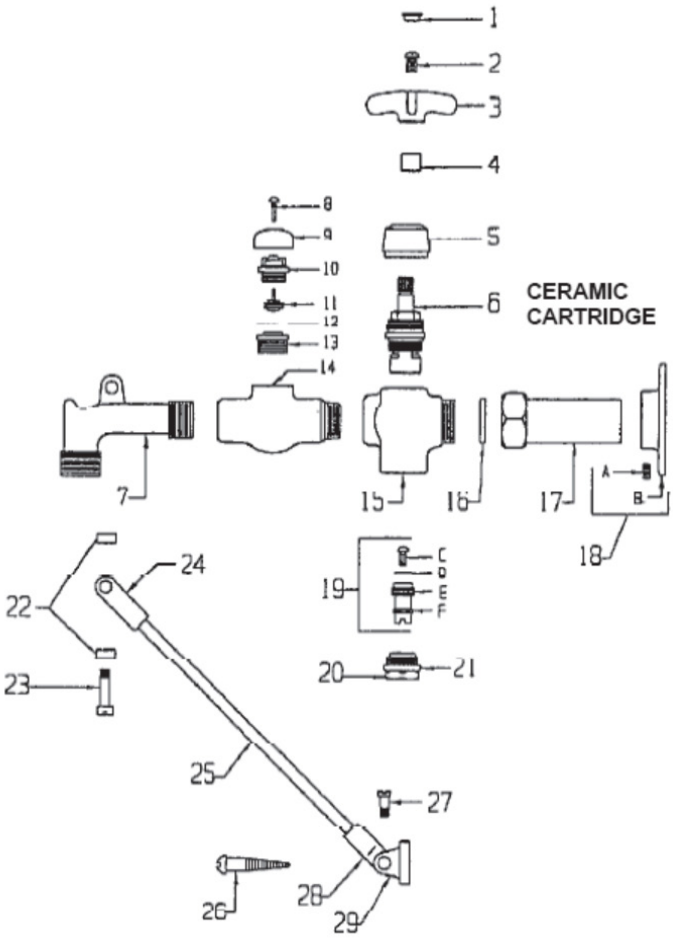

1	**808144**	RED INDEX
	808145	BLUE INDEX
2	**48-0307**	8-32 SCREW (2)
3	**808143**	CROSS HANDLE (2)
4	**806632**	SLEEVE (2)
5	**806247**	TRIM COLLAR (2)
6	**801302**	RED VALVE MOUNTING (2)
7	**18-0197**	SERVICE NOZZLE
8	**001010**	SCREW
9	**001012**	VAC BREAKER CAP
10	**001060**	HUB
11	**807685**	WASHER ASSEMBLY
12	**001013**	WASHER
13	**05-1823**	SEAT
14	**20-0576**	VAC BREAKER BODY
15	**20-0894**	CENTER BODY
16	**803640**	RUBBER WASHER (2)
17	**G08-0001**	SWIVEL ASSY (2)
18	**G26-0033**	FLANGE & SCREW
A	**26-0031**	FLANGE
B	**48-0194**	8-32 SET SCREW
19	**G03-0361**	IS SPINDLE (2)
C	**806449**	SCREW
D	**45-0448**	SEAT WASHER
E	**03-0494**	SPINDLE
F	**49-0076**	O-RING
20	**01-0772**	RETAINING NUT (2)
21	**49-0124**	O-RING (2)
22	**02-0136**	SPACERS (2)
23	**51-0063**	BRACE PIN
24	**47-0075**	RH BRACE W/O THREAD
	47-0074	LH BRACE W/THREAD
25	**32-0181**	BRACE ROD (2)
26	**13-0002**	WOOD SCREW (4)
27	**51-0012**	BRACE/FLANGE PIN (2)
28	**47-0074**	RH BRACE W/ THREAD (2)
29	**26-0069**	BRACE FLANGE (2)

SPEAKMAN - REPAIR PARTS LISTING FOR COMMANDER SERVICE SINK FITTING SC-5811-4WH & SC-5811-6WH

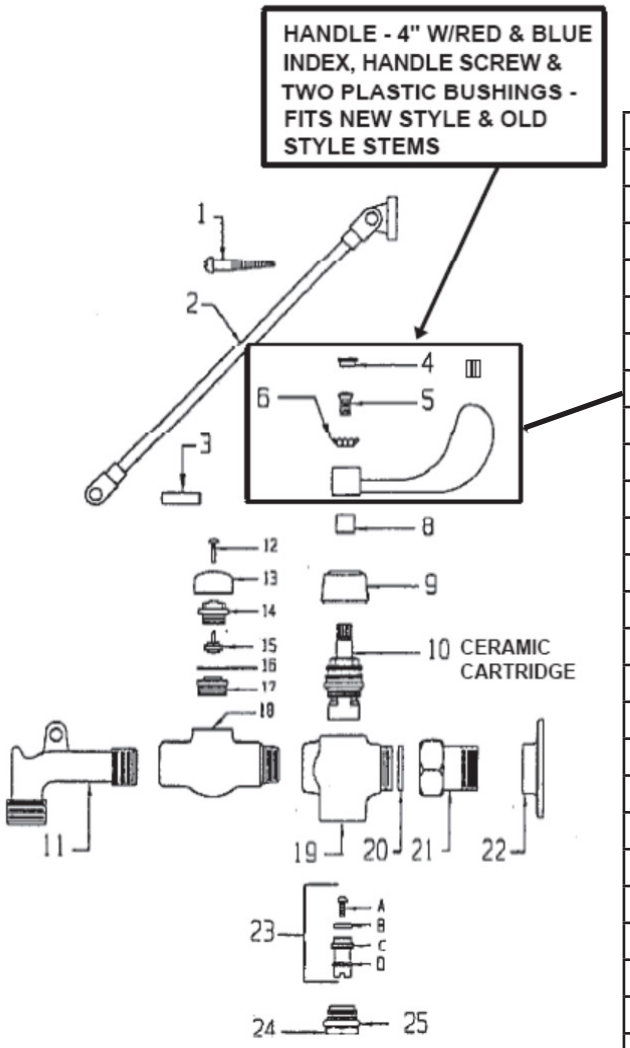

1	**13-0002**	WOOD SCREW (2)
2	**G47-0035**	BRACE ASSEMBLY
3	**51-0066**	PIN
4	**808144**	RED INDEX
	808145	BLUE INDEX
5	**48-0305**	8-32 SCREW (2)
6	**45-0686**	LOCKWASHER (2)
7	**808803**	4" WRIST HANDLE (2)
	04-0473	6" WRIST HANDLE (2)
8	**806632**	SLEEVE (2)
9	**806247**	TRIM COLLAR (2)
10	**801302**	RED VALVE MOUNTING (HOT/LEFT)
	801303	BLUE VALVE MOUNTING (COLD/RIGHT)
11	**18-0197**	SERVICE NOZZLE
12	**001010**	SCREW
13	**001012**	VAC BREAKER CAP
14	**001060**	HUB
15	**807685**	WASHER ASSEMBLY
16	**001013**	WASHER
17	**05-1823**	SEAT
18	**20-0576**	VAC BREAKER BODY
19	**20-0894**	CENTER BODY
20	**803640**	RUBBER WASHER (2)
21	**809998**	SWIVEL ASSY (2)
22	**26-0127**	FLANGE (2)
23	**G03-0361**	IS SPINDLE (2)
A	**806449**	SCREW
B	**45-0448**	SEAT WASHER
C	**03-0494**	SPINDLE
D	**49-0076**	O-RING
24	**01-0772**	RETAINING NUT (2)
25	**49-0124**	O-RING (2)

SYMMONS - TEMPTROL LAVATORY FAUCET (OLD STYLE)

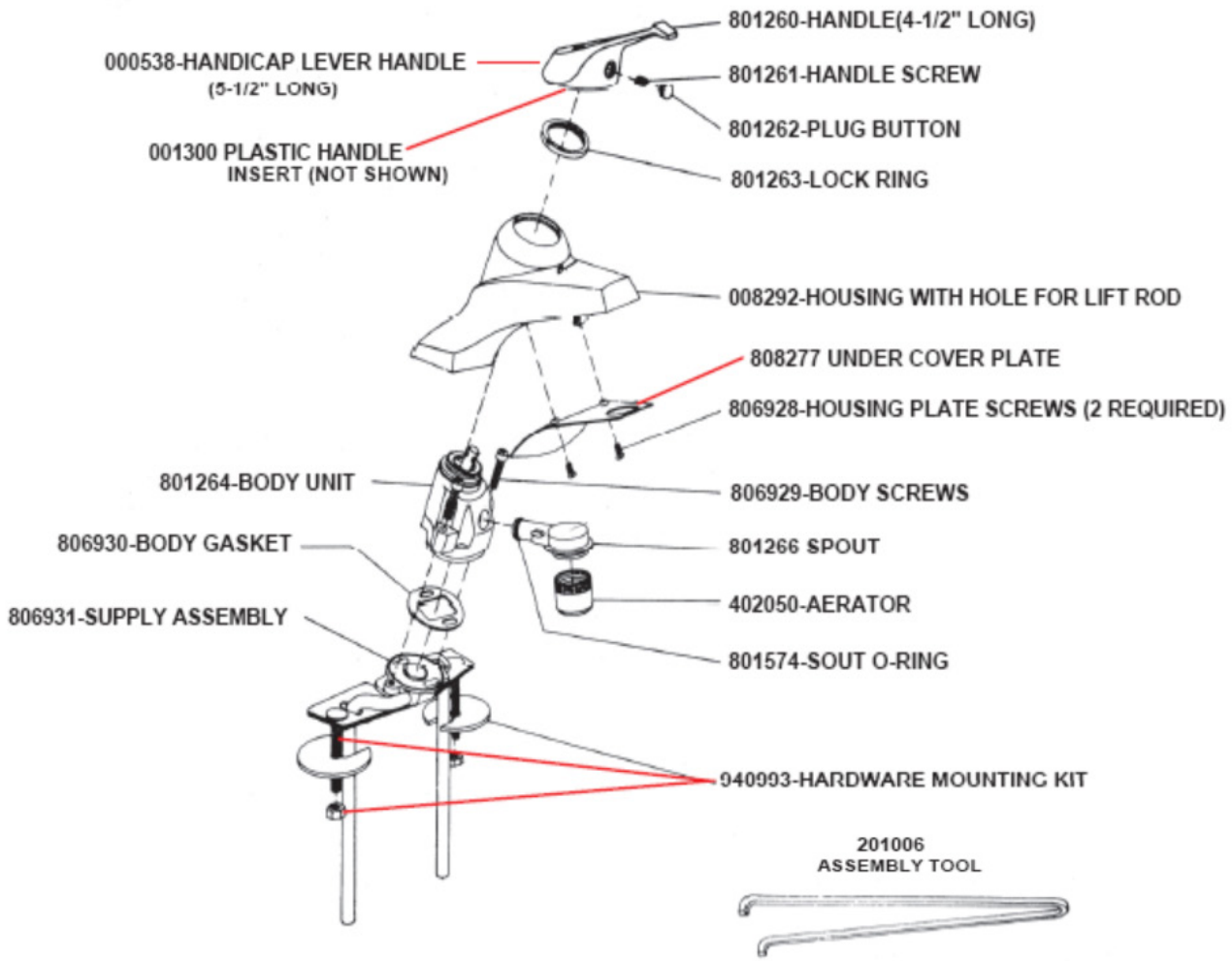

1 TO REMOVE HANDLE

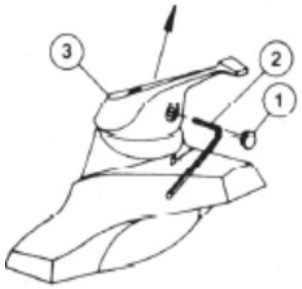

SHUT OFF WATER SUPPLY

1. POP OUT PLUG BUTTON.
2. USE 3/32" HEX. WRENCH TO LOOSEN HANDLE. TURN SETSCREW COUNTER-CLOCKWISE
3. LIFT OFF HANDLE.

2 TO REMOVE HOUSING

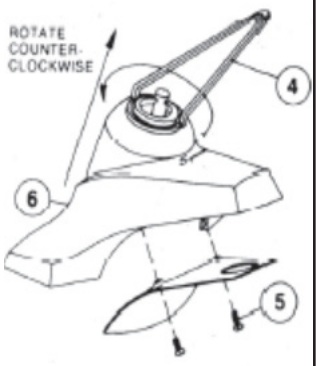

4. USE L-T 2 ASSEMBLY TOOL AND REMOVE SLOTTED LOCK RING.
5. REMOVE HOUSING PLATE SCREWS WITH PHILLIPS SCREWDRIVER (IF FAUCET HAS LIFT ROD FOR DRAIN, DETACH UNDER SINK.)
6. LIFT OFF HOUSING.

3 TO REMOVE BODY UNIT AND SPOUT

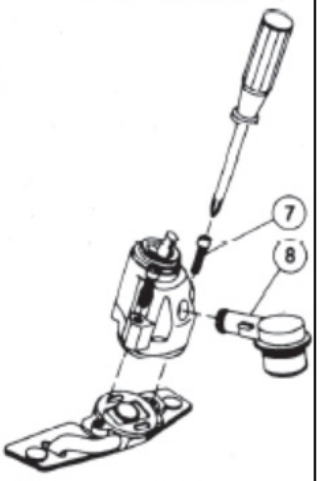

7. USE PHILLIPS SCREW-DRIVER TO REMOVE 2 SCREWS HOLDING BODY TO SUPPLY ASSEMBLY.
8. PULL OUT SPOUT.

4 TO REPLACE BODY UNIT

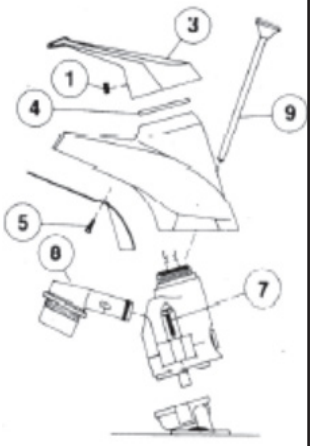

REASSEMBLE ALL COMPONENTS IN REVERSE ORDER.

9. LIFT ROD MODEL MUST BE REASSEMBLED UNDER SINK TO OPERATE DRAIN.

10

SYMMONS - ULTRA-SENSE FAUCET SERIES

803111	ANCHOR BAR
803112	SPIROL SPACER
803124	NUT
403306	AERATOR
809897	DECK PLATE
SF-140	GASKET
SF-142	MOUNTING KIT
SF-143	MOUNTING SCREWS
SF-145	LABEL
SF-147	SENSOR REPAIR HOSES
806188	SUPPLY HOSES
809932	PILOT VALVE REPAIR KIT
SF-151	SOLENOID VALVE MEMBRANE
SF-152	HOUSING SCREW
SF-153	HANDLE PLUG BUTTON
601429	HANDLE
SF-155	HANDLE SCREW
SF-156	HANDLE LIMIT STOP
SF-158	SINGLE MOUNT KIT
SF-159	PLUG
SF-162	MIXER
SF-181	CHECK STRAINER ASSEMBLY
SF-186	CHECK STRAINER KIT
941335	6V LITHIUM BATTERY

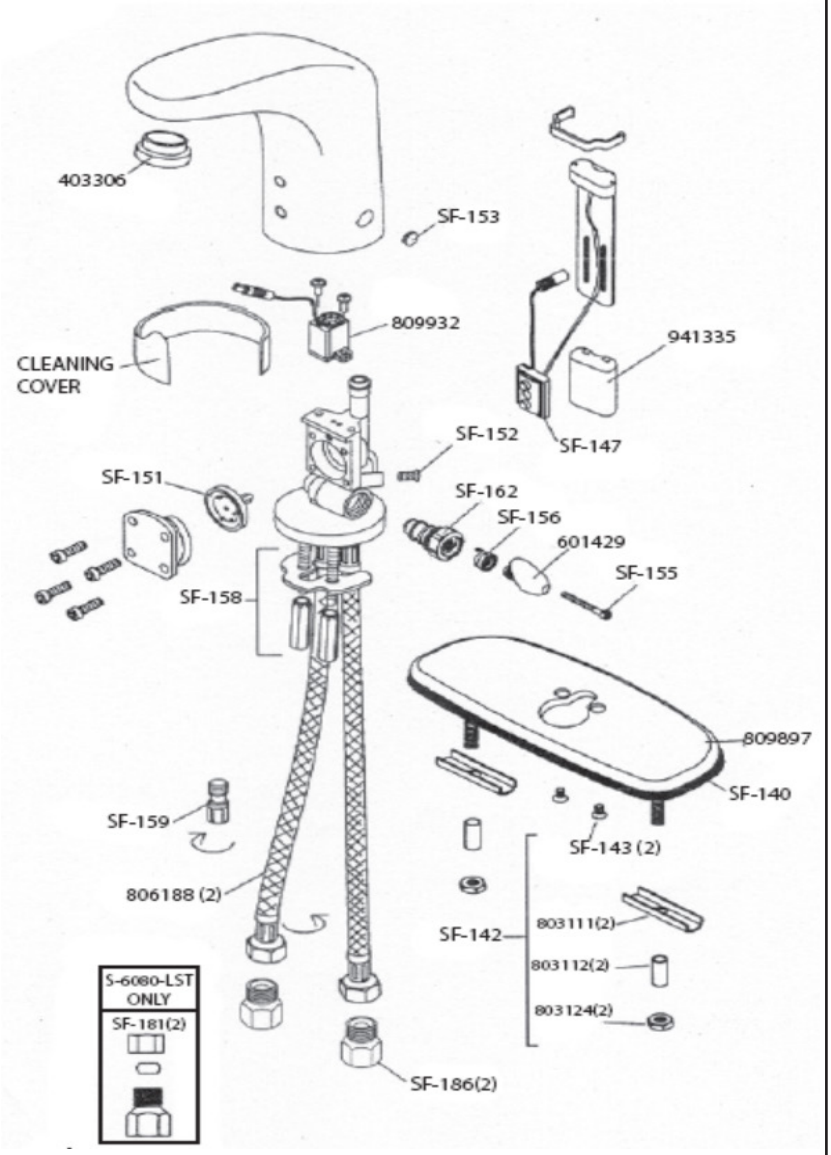

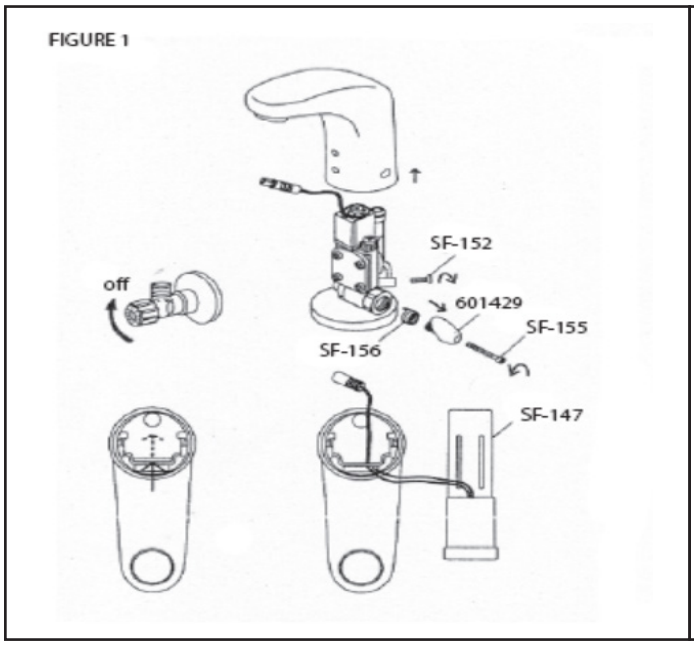

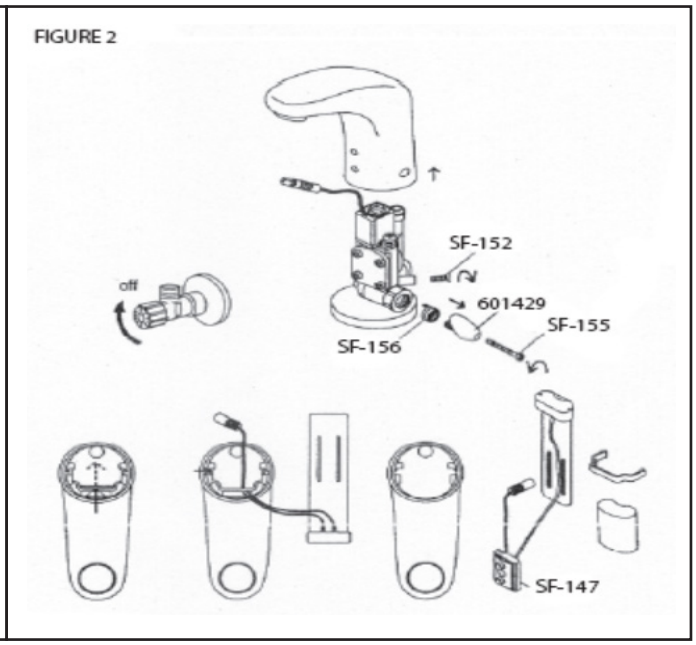

10

SYMMONS - S-20 SERIES NEW STYLE

803106(HANDLE)
801261(SETSCREW)
803113(PLUG BUTTON)
803109(LOOP HANDLE)
803108(SHIM PLATE)
803116(LIMIT STOP BODY)
803114(LIMIT STOP PLATE)
803131(VALVE CAP)
803107(COMPRESSION RING)
803351(CARTRIDGE)
803117(VALVE HOUSING)
NO LONGER AVAILABLE
803118(UNDERCOVER PLATE)
803121(SCREWS/PAIR)
402050(AERATOR)
803111(ANCHOR BAR/PAIR)
803112(MOUNTING SPACER/PAIR)
803124(MOUNTING NUTS/PAIR)
401168
NUT
803122
MOUNTING GASKET
803129(POP UP ASSEMBLY)

Figure 1

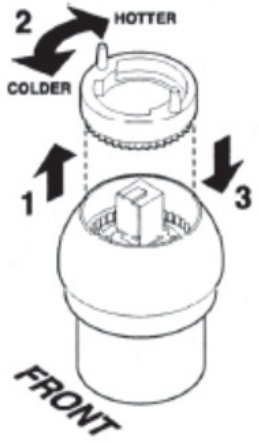

10

SYMMONS - SAFETY MIX
PRESSSURE BALANCING MIXING VALVE - FROM 1960 TO DATE

IDENTIFY VALVE BY DIAL MARKING, "MODEL V" OR "MODEL O"

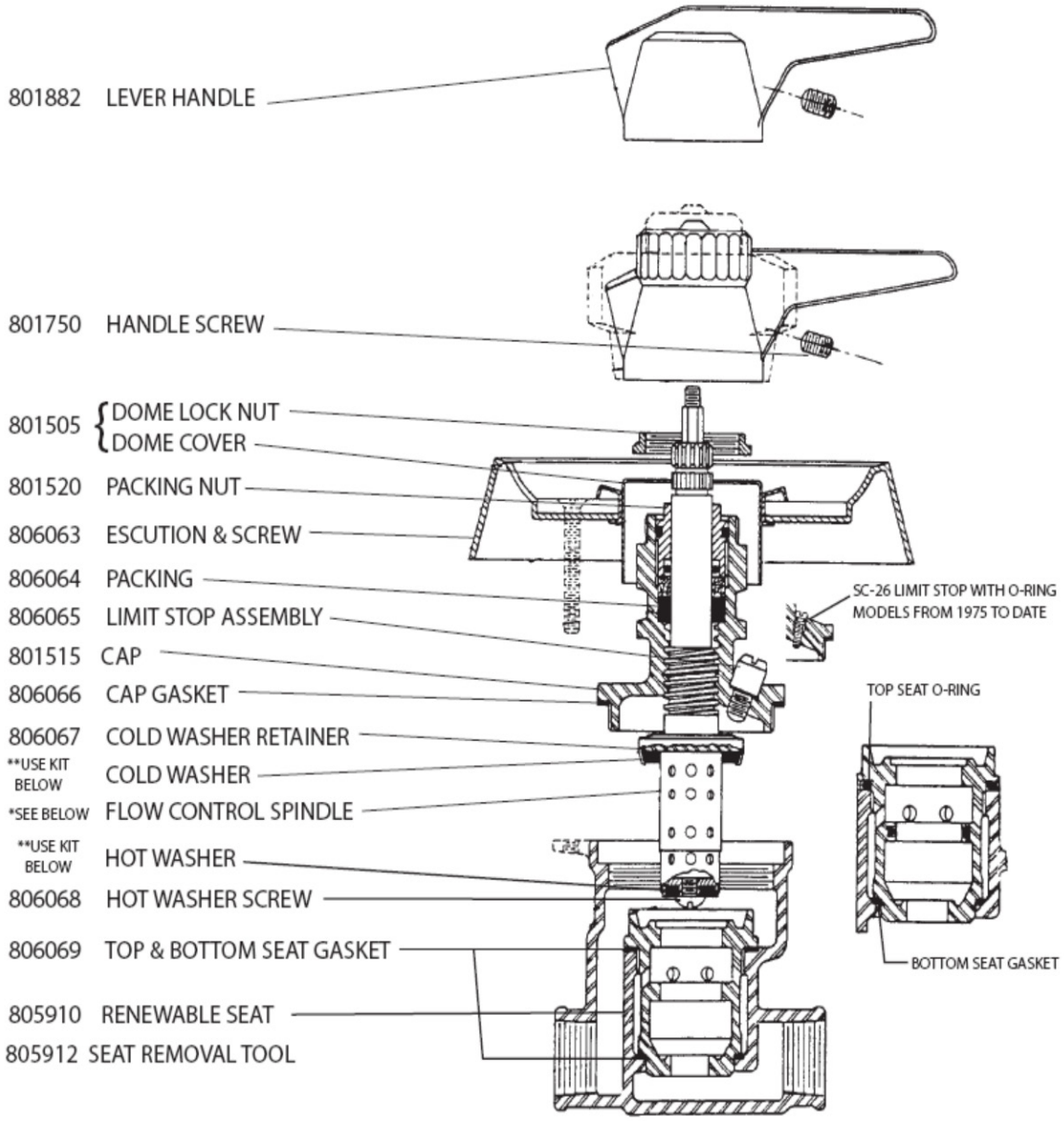

801745 - SAFETY MIX WASHER & GASKET KIT (KIT INCLUDES THE FOLLOWING PARTS)

806067 - COLD WASHER RETAINER
** - HOT AND COLD WASHERS
806064- SPINDLE PACKING
806066 - CAP GASKET
806068 - HOT WASHER SCREW
801750 - HANDLE SCREW

REPAIR UNITS (COMPLETE WITH WASHERS)

805910 - RENEWABLE SEAT UNIT

*FLOW CONTROL SPINDLE. REPLACE W/ SPINDLE ASSEMBLY **801265 & 801882** HANDLE

NOTE: WHEN VALVE HAS A HIGH FREQUENCY OF USE AND REQUIRES REPAIR, REPLACE **RENEWABLE SEAT AND SPINDLE ASSEMBLY** SIMULTANEOUSLY

SYMMONS - SAFETY MIX HYDAPIPE

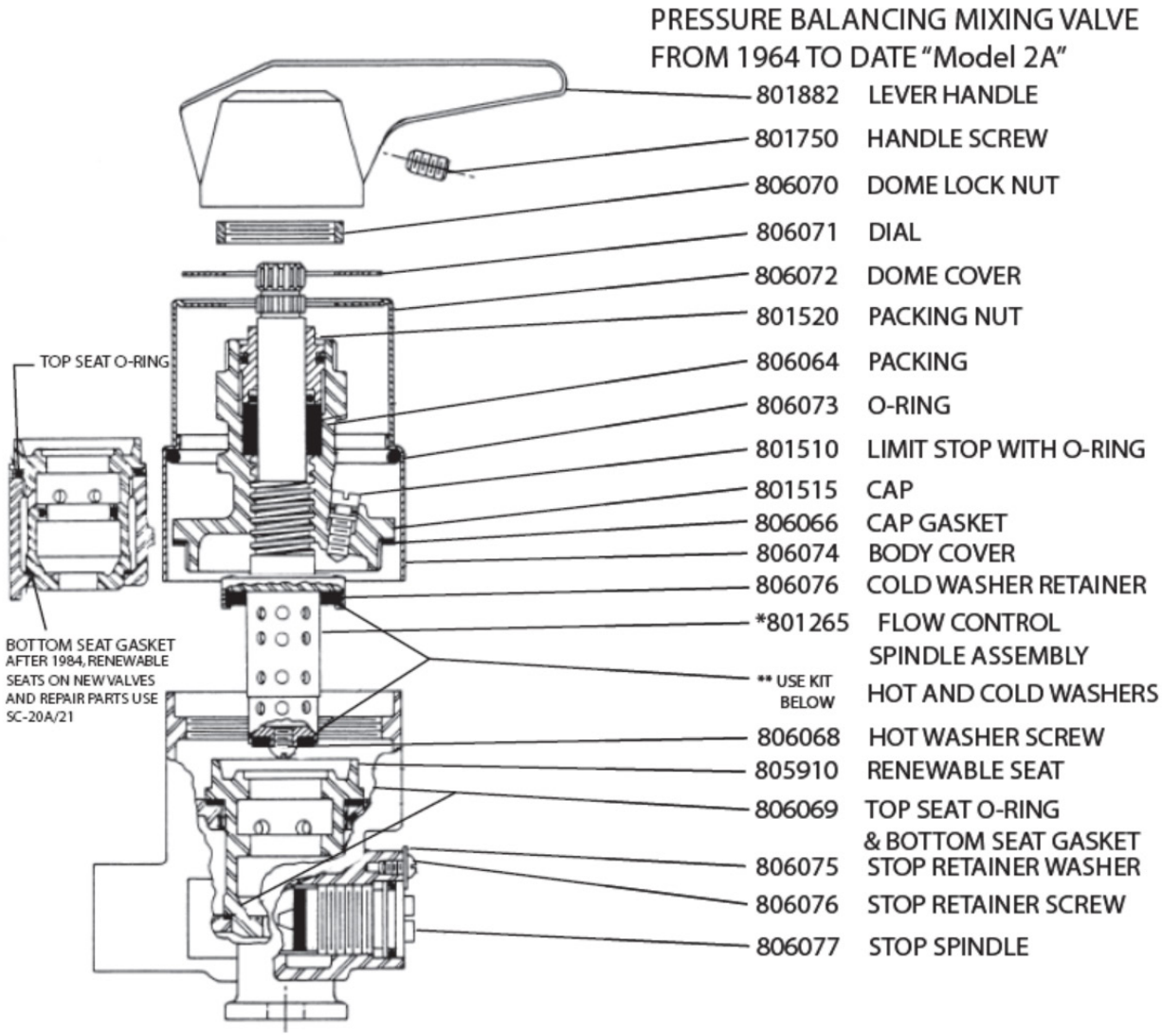

801745 - SAFETY MIX WASHER & GASKET KIT (KIT INCLUDES THE FOLLOWING PARTS)

806067 - COLD WASHER RETAINER
** - HOT AND COLD WASHERS
806064- SPINDLE PACKING
806066 - CAP GASKET
806068 - HOT WASHER SCREW
801750 - HANDLE SCREW

REPAIR UNITS (COMPLETE WITH WASHERS)

805910 - RENEWABLE SEAT UNIT (COMPLETE)
801265 - SPINDLE ASSEMBLY

*SPINDLE ASSEMBLY W/ VOLUME CONTROL NO LONGER AVAILABLE. USE SPINDLE ASSEMBLY **801265 & 801882** HANDLE

NOTE: WHEN VALVE HAS A HIGH FREQUENCY OF USE AND REQUIRES REPAIR, REPLACE **RENEWABLE SEAT AND SPINDLE ASSEMBLY** SIMULTANEOUSLY

SYMMONS - SAFETYMIX VISU-TEMP
PRESSURE BALANCING VALVE W/ THERMOMETER
FROM 1975 TO DATE - IDENTIFY BY DIAL MARKING, "MODEL VT"

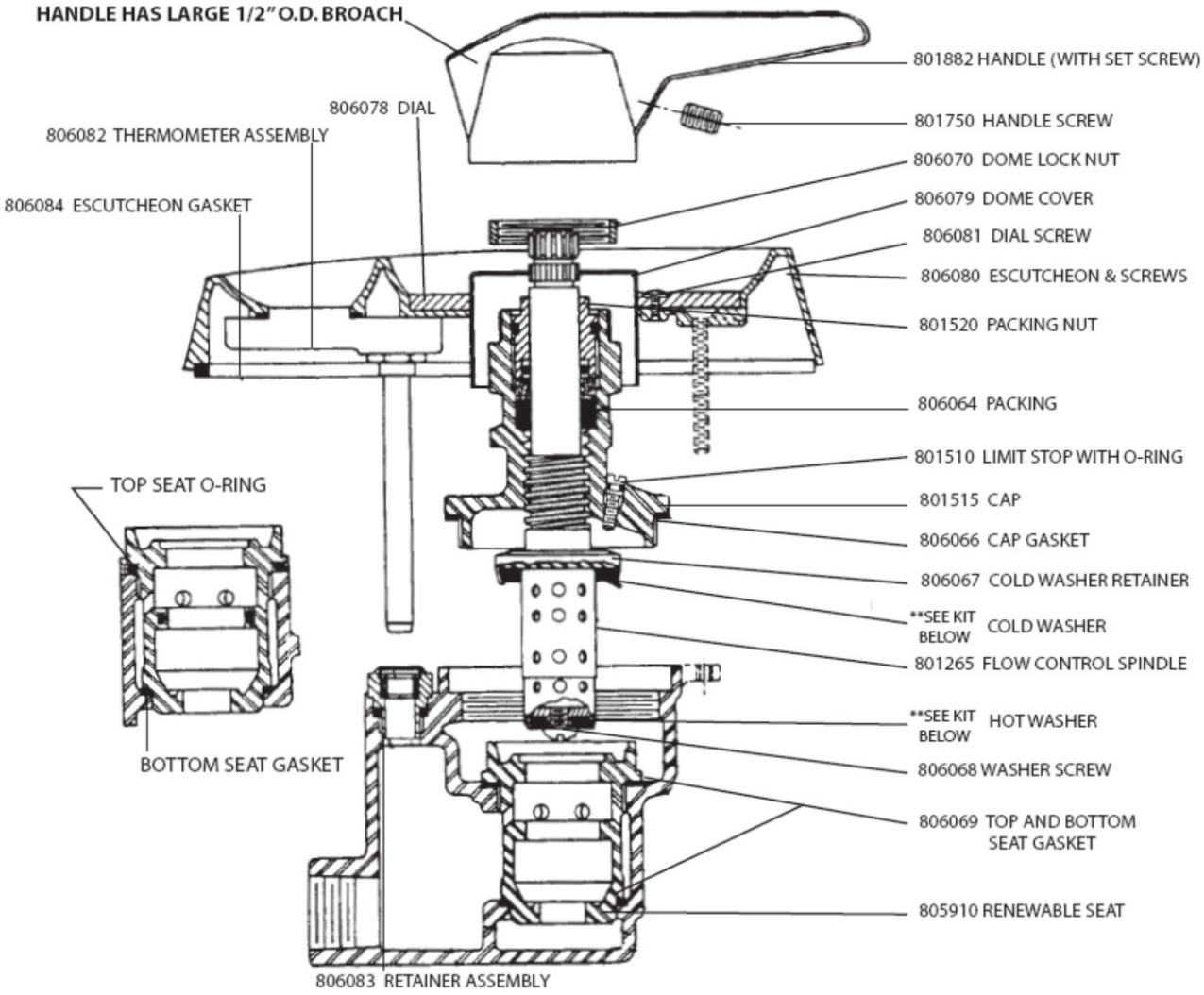

REPAIR PARTS

803850 - WASHER & GASKET KIT (KIT INCLUDES THE FOLLOWING)

806083 - RETAINER ASSEMBLY
806084 - ESCUTCHEON GASKET
806067 - COLD WASHER RETAINER
** - HOT AND COLD WASHERS
806064- SPINDLE PACKING
806066 - CAP GASKET
806068 - HOT WASHER SCREW
801750 - HANDLE SCREW

REPAIR UNITS (COMPLETE WITH WASHERS)

805910 - RENEWABLE SEAT UNIT (COMPLETE)
801265 - SPINDLE ASSEMBLY

NOTE: WHEN VALVE HAS A HIGH FREQUENCY OF USE AND REQUIRES REPAIR, REPLACE **RENEWABLE SEAT AND SPINDLE ASSEMBLY** SIMULTANEOUSLY

SYMMONS - TEMPTROL

PRESSURE BALANCING MIXING VALVE 1968 TO DATE
IDENTIFY VALVE BY DIAL MARKING TEMPTROL & MODEL A, MODEL B, OR MODEL C,
MODEL A VALVE W/ TEMP. CONTROL & DIVERTER, MODEL B VALVE W/ TEMP. & VOLUME CONTROL,
MODEL C VALVE W/ TEMP. CONTROL ONLY

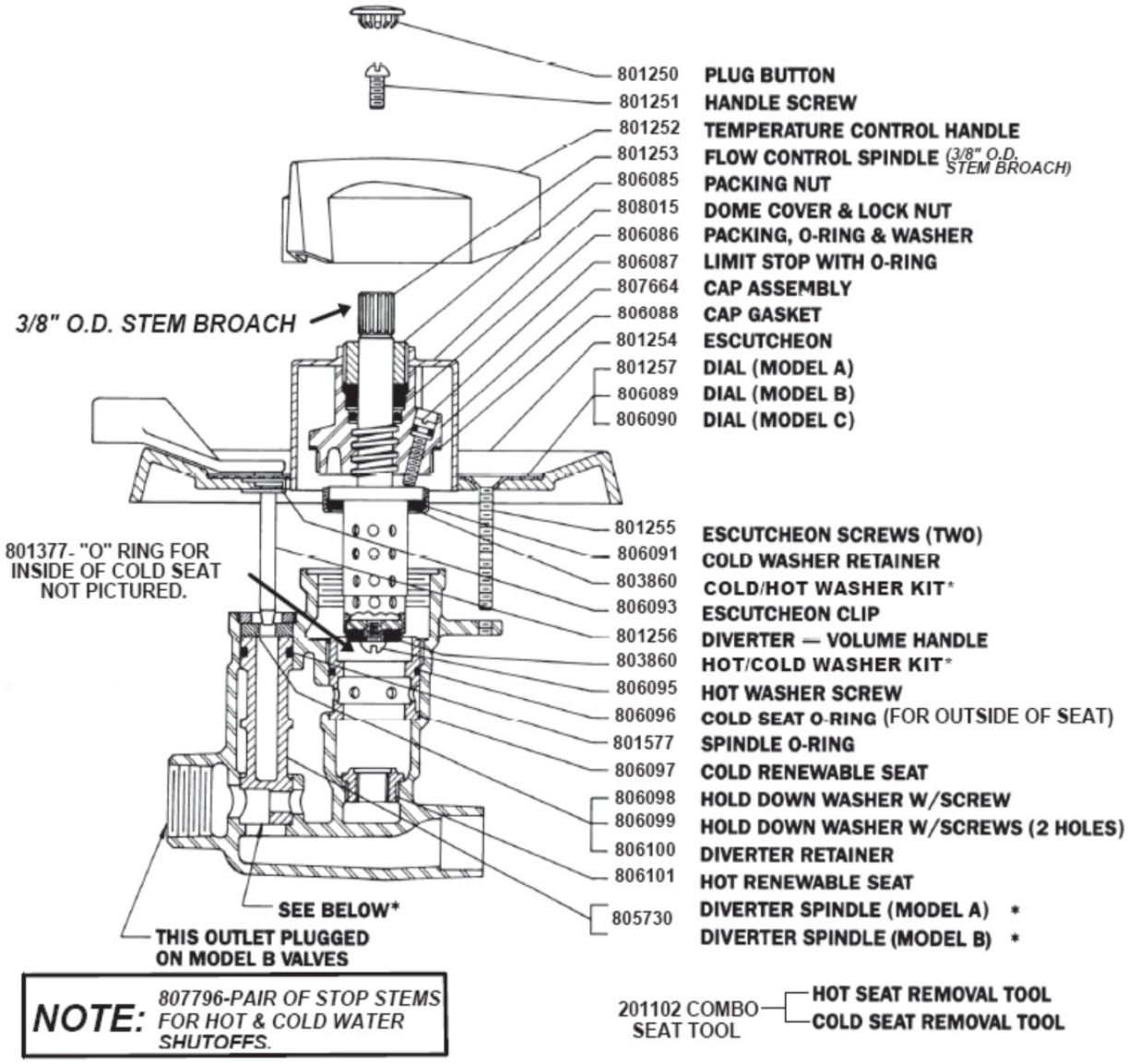

COMPOSITE PARTS

803855 - HOT SEAT (806101), COLD SEAT (806097), COLD SEAT O-RING (806096)

803860 - HOT WASHER SCREW (806095), HOT WASHER (806094), COLD WATER RETAINER (806091), COLD WASHER (806092), CAP GASKET (806088)

801253 - SPINDLE ASSEMBLY

***805730** - DIVERTER VOLUME SPINDLE (806102), O-RING (801577) - FOR MODEL A VALVE - COLOR IN BEIGE OR GREY

***806103** - DIVERTER VOLUME SPINDLE (806102), O-RING (801577) - FOR MODEL B VALVE - COLOR BLACK

NOTE: WHEN VALVE HAS A HIGH FREQUENCY OF USE AND REQUIRES REPAIR, REPLACE RENEWABLE SEAT AND SPINDLE ASSEMBLY SIMULTANEOUSLY.

SYMMONS - STOP PARTS

SAFETYMIX, SAFETYMIX'ETTE' & TEMPTROL

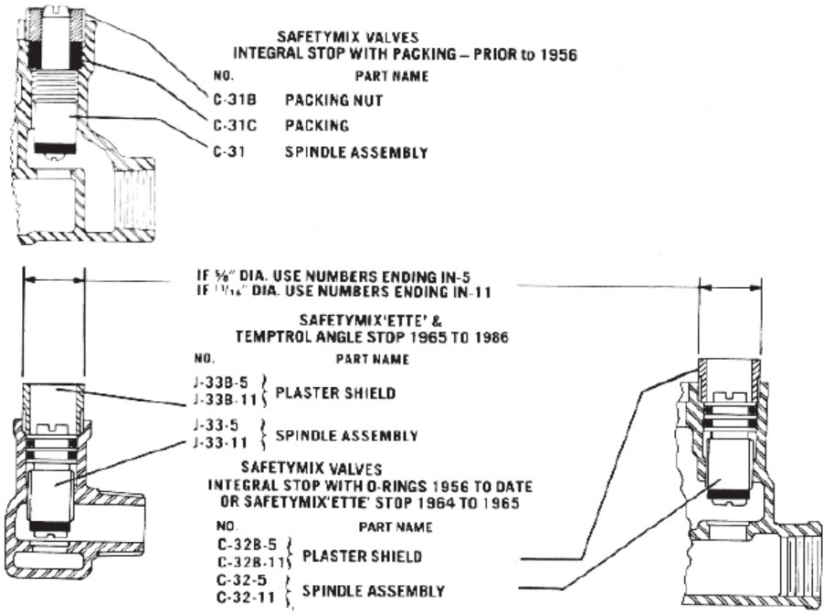

EXPOSED SAFETYMIX VALVES

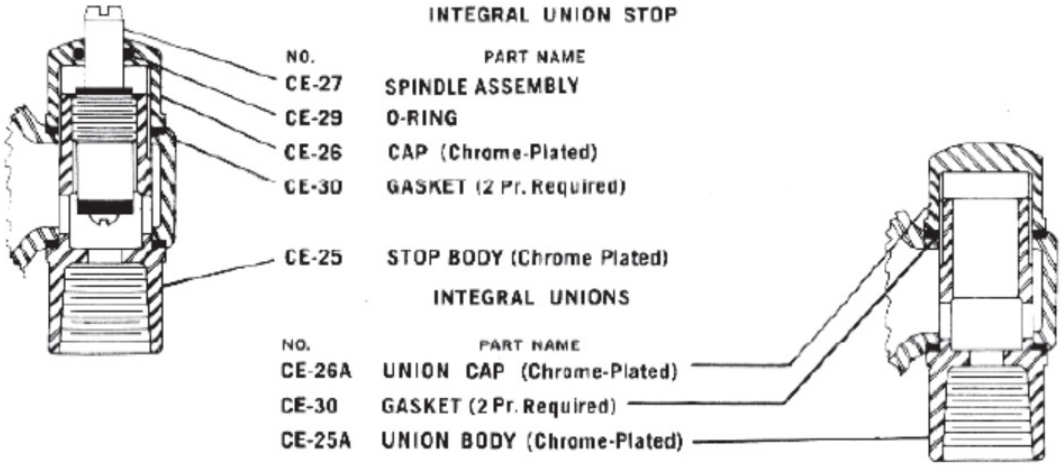

TEMPTROL VALVE WITH SWEAT CONNECTIONS

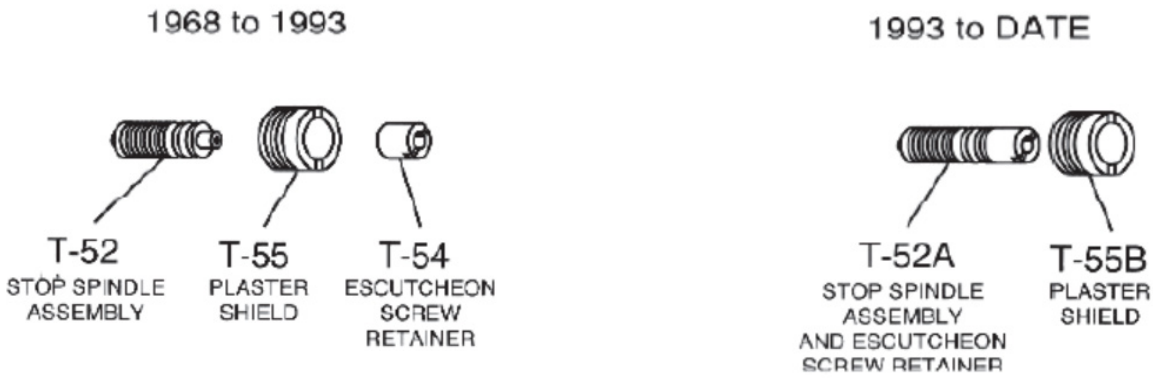

10

SYMMONS - SHOWEROFF "60" AUTOMATIC SHOWER LIMITING VALVE FROM 1960 TO 1983 - OLD STYLE

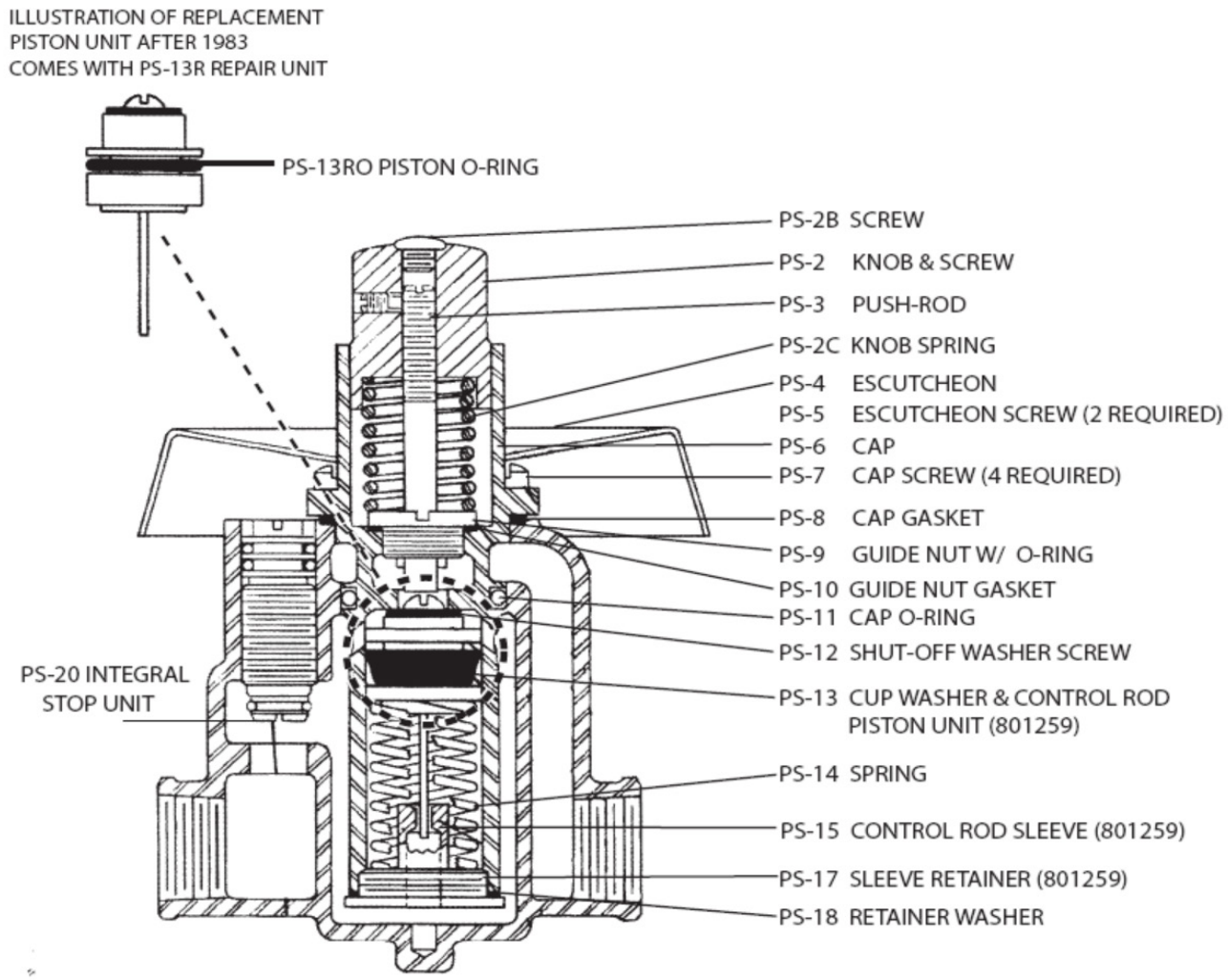

FOR SHOWEROFF PARTS IN HYDAPIPE MODELS #1-801S-60 & #1-801S-56 PRIOR TO SEPT 1975, CALL FOR INFORMATION REGARDING THESE VALVES

REPAIR PARTS

WASHER & GASKET PARTS

801259 - REPAIR UNIT - INCLUDES PISTON UNIT, CONTROL ROD SLEEVE, SLEEVE RETAINER & ALL NECESSARY WASHERS & GASKETS

COMPLETE REPLACEMENT UNIT

801258 - CARTRIDGE UNIT - COMPRISES THE COMPLETE WORKING UNIT OF THE VALVE ASSEMBLED & TESTED

SYMMONS - "SHOWEROFF" AUTOMATIC SHOWER LIMITING VALVE FROM 1983 TO DATE - MODEL 83 - NEW STYLE

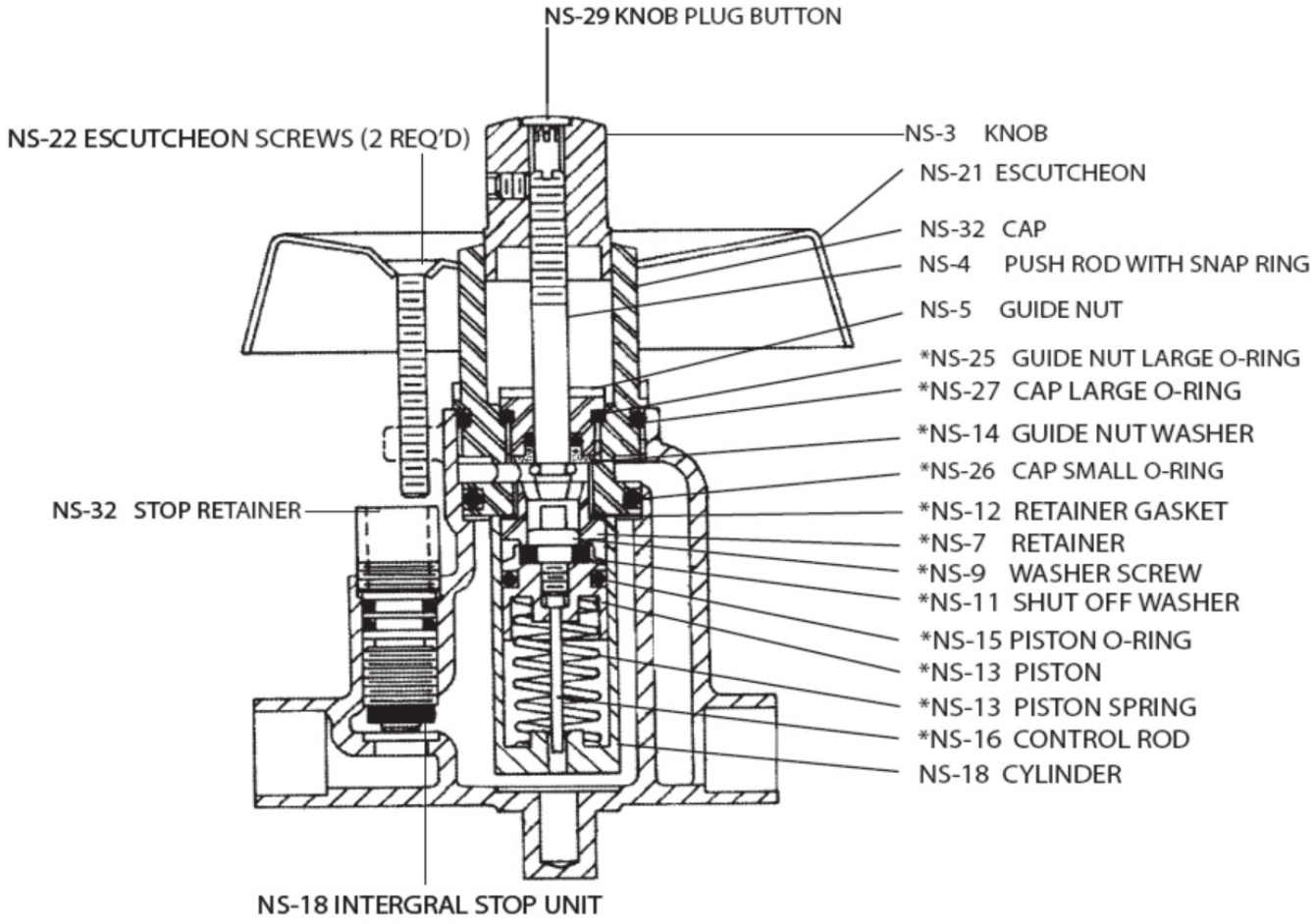

REPAIR PARTS

801267 - COMPLETE REPLACEMENT UNIT

CARTRIDGE UNIT - COMPRISES THE COMPLETE WORKING UNIT OF THE VALVE - ASSEMBLED & TESTED

802400 - WASHER AND GASKET REPAIR UNIT

REPAIR UNIT - INCLUDES PISTON UNIT, CYLINDER & ALL NECESSARY WASHERS AND GASKETS SHOWN BY *ASTERISK

SYMMONS - REPAIR PARTS

#4-458 & #4-459 DOUBLE OUTLET DIVERTERS 1976 TO SEPT. 1990

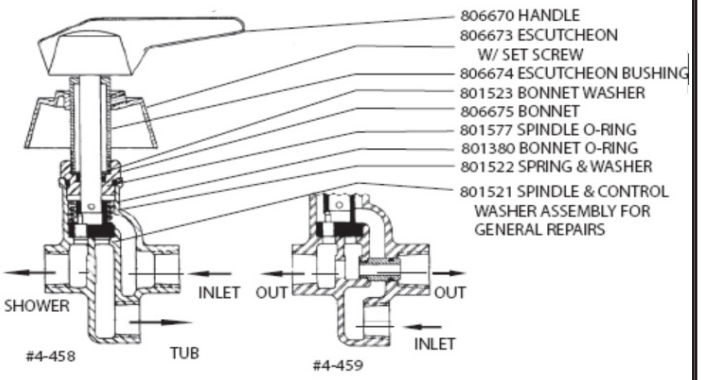

#4-460 TRIPLE OUTLET DIVERTER

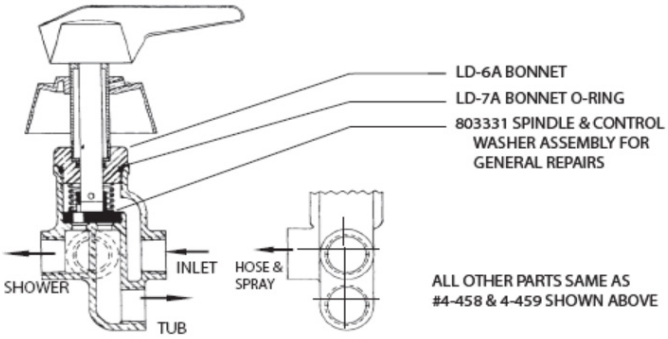

ALL OTHER PARTS SAME AS #4-458 & 4-459 SHOWN ABOVE

SYMMONS REPLACEMENT CARTRIDGES

ACS PART #	SYMMONS PART #
805556	7-102NW
604512	7-1000NW
804477	7-400NW
804402	7-700NW
002015	7-200NW
808968	7-500NW
802055	7-900NW

LEVER TYPE 1960 TO 1964 OLD STYLE NO LONGER AVAILABLE

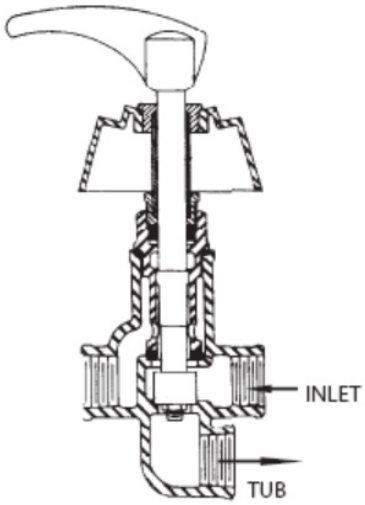

USE 804573 REPLACEMENT STEM UNIT W/ ESCUTCHEON

LEVERTROL FROM 1965 TO 1976 SEPT. 1990 TO DATE

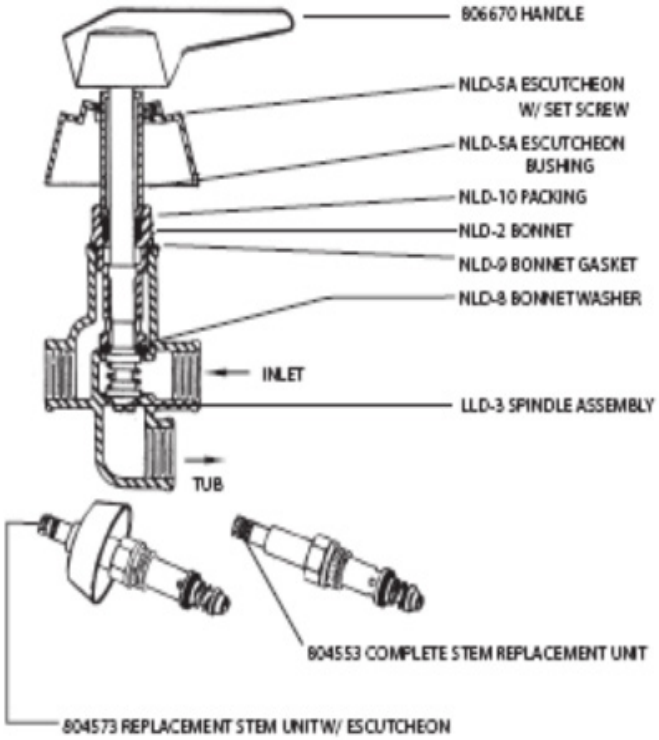

10

SYMMONS - TEMPCONTROL REPAIR PARTS

Model No.	Inlets	Outlet
5-100	½	½
5-101	½	½
5-101P	½	½
5-102	½	½
5-102P	½	½

Suffix HC High Capacity Model specify when ordering cartridge

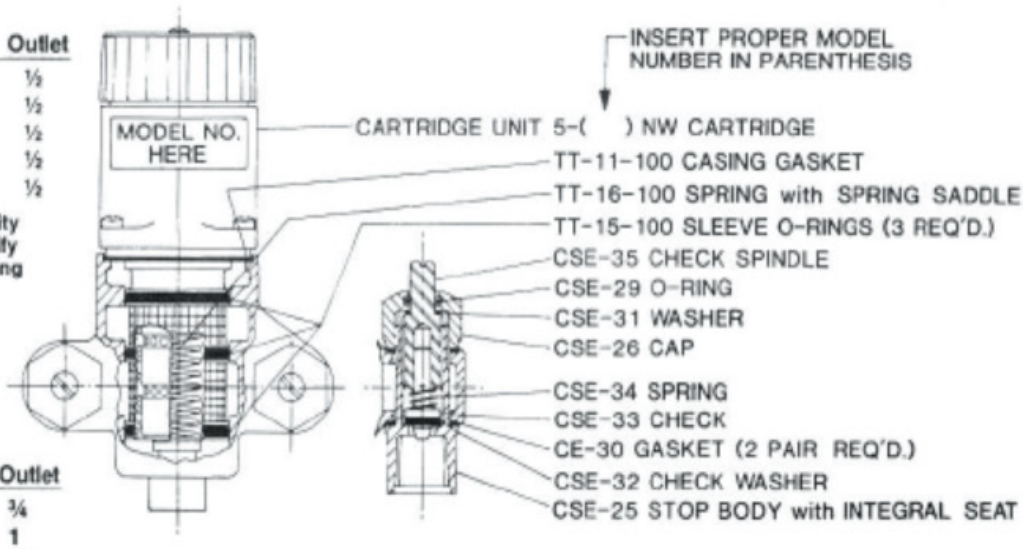

Model No.	Inlets	Outlet
5-200	¾	¾
5-400	¾	1
5-500	1	1¼
5-700	1¼	1½

5-200-1, 5-400-1 } lower capacity units

GLAND NUT DISTINGUISHES VALVE PRIOR TO 1988

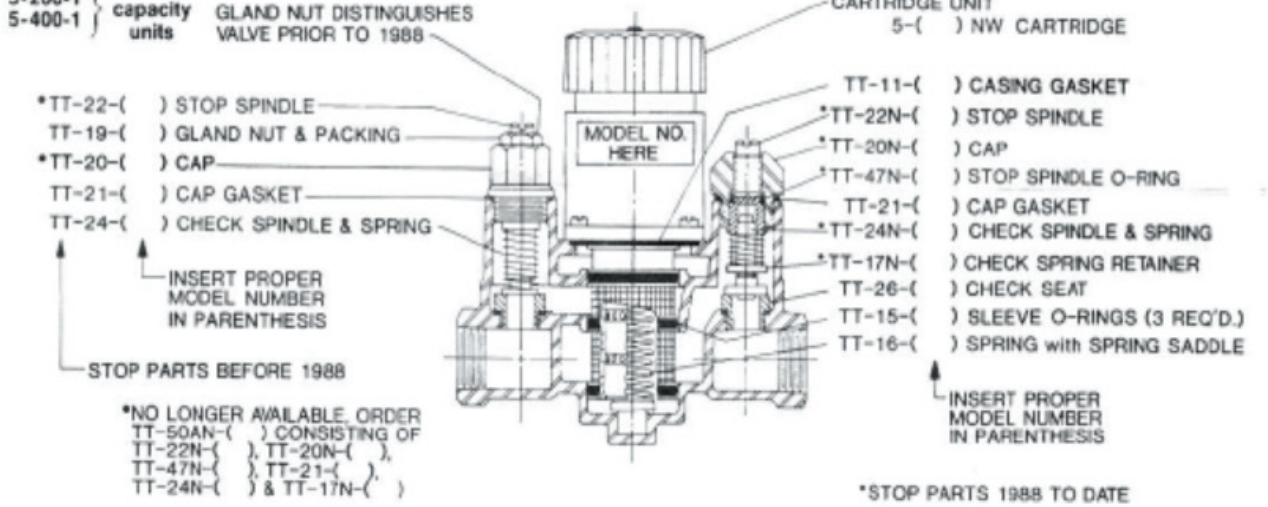

*NO LONGER AVAILABLE, ORDER TT-50AN-( ) CONSISTING OF TT-22N-( ), TT-20N-( ), TT-47N-( ), TT-21-( ), TT-24N-( ) & TT-17N-( )

*STOP PARTS 1988 TO DATE

Model No.	Inlets	Outlet
5-900	1½	1½
5-1000	1½	2

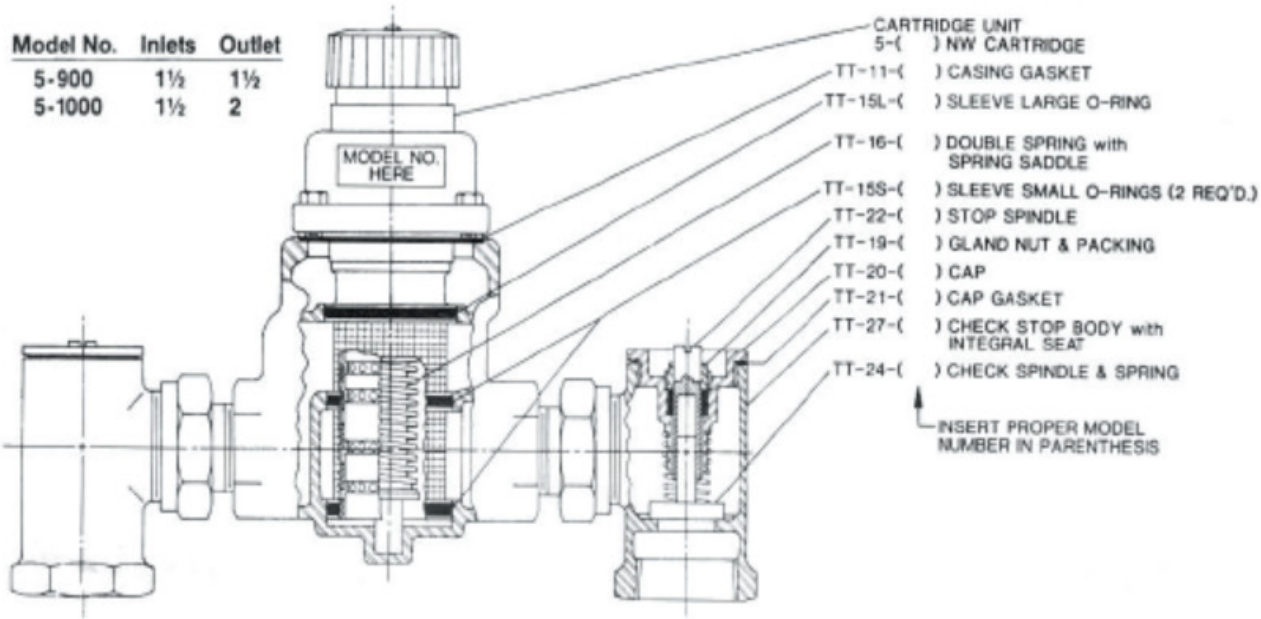

10

T & S PARTS

ETERNA CARTRIDGE

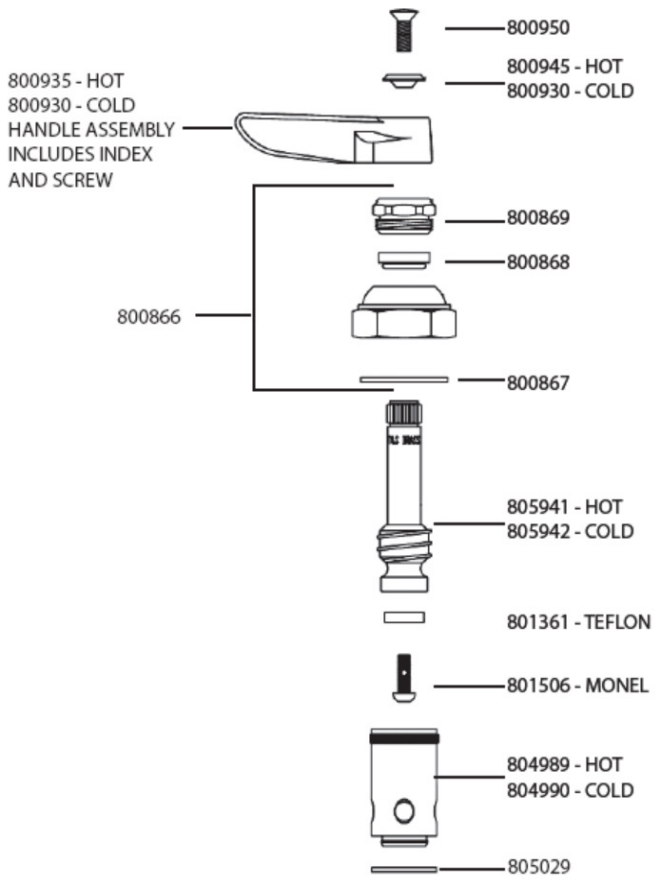

ETERNA CARTRIDGE WITH SPRING CHECK

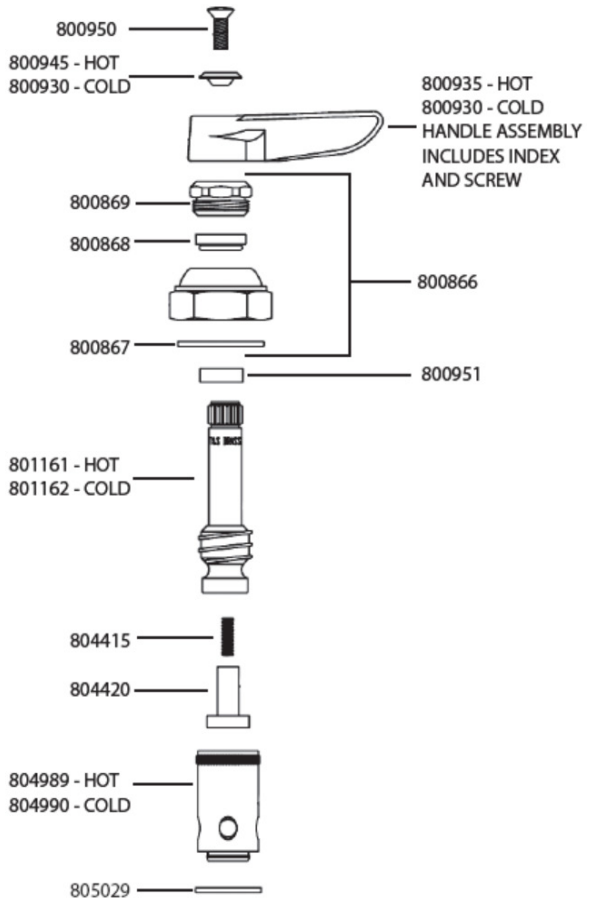

STEM & HANDLE ASSEMBLY

800910 - HOT W/ STANDARD WASHERS
800915 - COLD W/ STANDARD WASHERS
802435 - HOT - SPRING CHECK TYPE PLUNGERS
802436 - COLD - SPRING CHECK TYPE PLUNGERS
805231 - SAME AS 800910 - LESS HANDLE
805230 - SAME AS 800915 - LESS HANDLE

WRIST BLADE HANDLES

800986 - 4" HANDLE, HOT INDEX (RED) AND SCREW
800987 - 4" HANDLE, CLOD INDEX (BLUE) AND SCREW
809798 - 6" HANDLE, HOT INDEX (RED) AND SCREW
809799 - 6" HANDLE, COLD INDEX (BLUE) AND SCREW
800895 - RED INDEX ONLY
800900 - BLUE INDEX ONLY
800905 - HANDLE SCREW ONLY

ETERNA SPINDLE PARTS KIT

1	RIGHT HAND ETERNA INSERT
1	LEFT HAND ETERNA INSERT
1	RIGHT HAND SPINDLE INSERT
1	LEFT HAND SPINDLE INSERT
6	SEAT WASHER SCREW
10	BOTTOM GASKET
12	TOP GASKET
24	SEAT WASHER
6	PACKING
6	WASHER
6	0-RING

NOTE: RIGHT-HAND SPINDLE ASSEMBLIES (HOT SIDE) ARE USED ON THE COLD SIDE ONLY WHEN FOUR-ARM, CAROLINA AND ALPINE HABNDLES ARE SPECIFIED

T & S OLD STYLE SPINDLE ASSEMBLY
#1 CUSTOM STYLE FAUCET WITH LEVER HANDLES (IN USE PRIOR TO 1969)

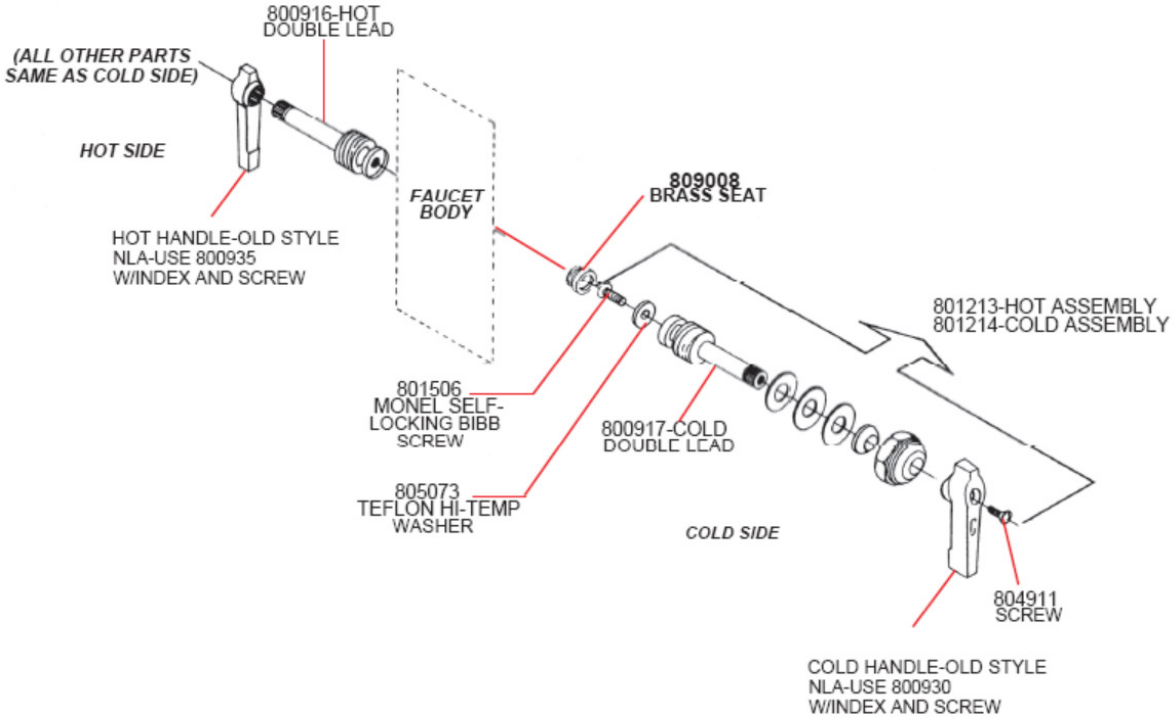

T & S OLD STYLE REPAIR KIT FOR ABOVE SPINDLE ASSEMBLIES - 800908

QTY	ITEM	
1	RIGHT HAND SPINDLE/STEM	
1	LEFT HAND SPINDLE/STEM	
6	SEATS	
6	SEAT SCREWS	
12	WASHERS-BRASS	
12	BONNET WASHERS- WHITE RUBBER	
12	BONNET WASHERS - STAINLESSS	
24	SEAT WASHERS	
24	O-RINGS	REPLACES DOME PACKING
12	WASHERS	

T & S - SLOW SELF-CLOSING FAUCET ASSEMBLY - 608206

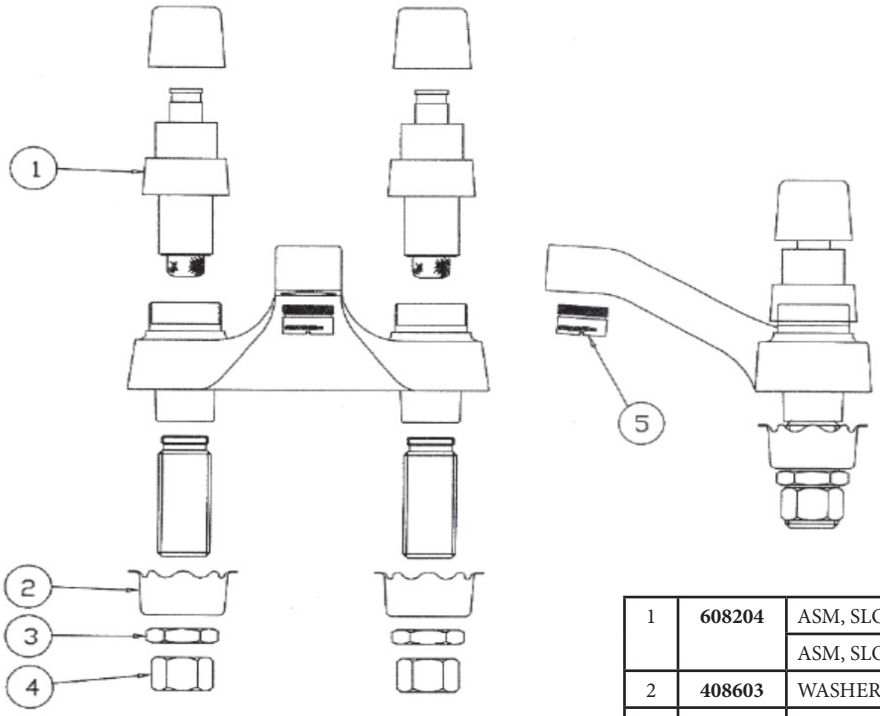

1	**608204**	ASM, SLOW SELF-CLOSING, METER VALVE - H
		ASM, SLOW SELF-CLOSING METER VALVE - C
2	**408603**	WASHER, ROSETTE
3	**801193**	LOCKNUT
4	**401168**	NUT, COUPLING
5	**404107**	AERATOR

METERING CARTRIDGE REPAIR KIT - **808463**

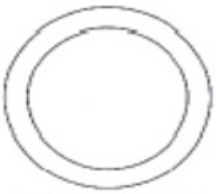

(1) TOP WASHER

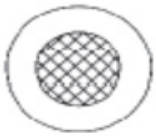

(1) BOTTOM SEAL FILTER WASHER

(1) O-RING

(1) BOTTOM STEM SEAL

T & S - CENTERSET LAVATORY FAUCET LESS POP-UP - 608228

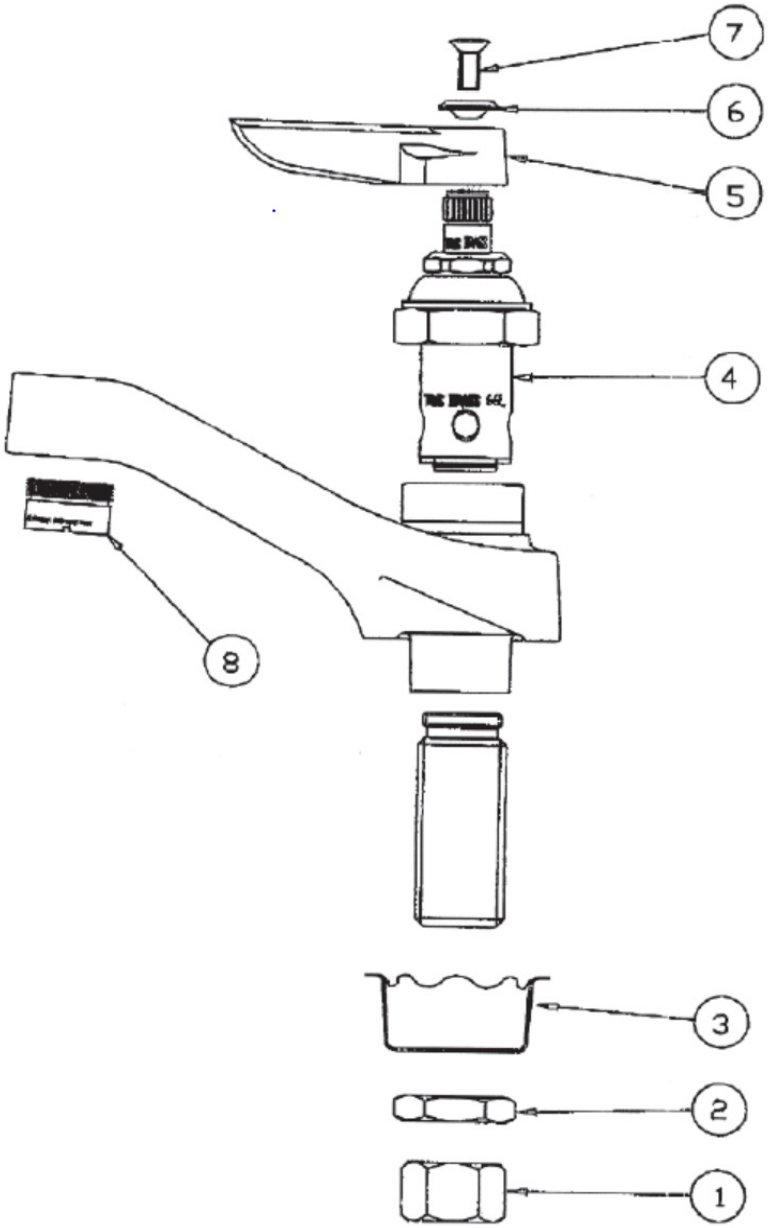

1	**401168**	NUT, COUPLING
2	**401193**	LOCKNUT SHANK
3	**408603**	WASHER, ROSETTE
4	**805230**	ASM, SPINDLE ETERNA RH/COLD
	805231	ASM, SPINDLE ETRNA LF/HOT
5	**808420**	HANDLE, LEVER
6	**800940**	INDEX, BUTTON, BLUE/COLD
	800945	INDEX BUTTON, RED/HOT
7	**800950**	SCREW, HANDLE
8	**404107**	AERATOR

T & S - B-1105 SERIES WORKBOARD FAUCETS

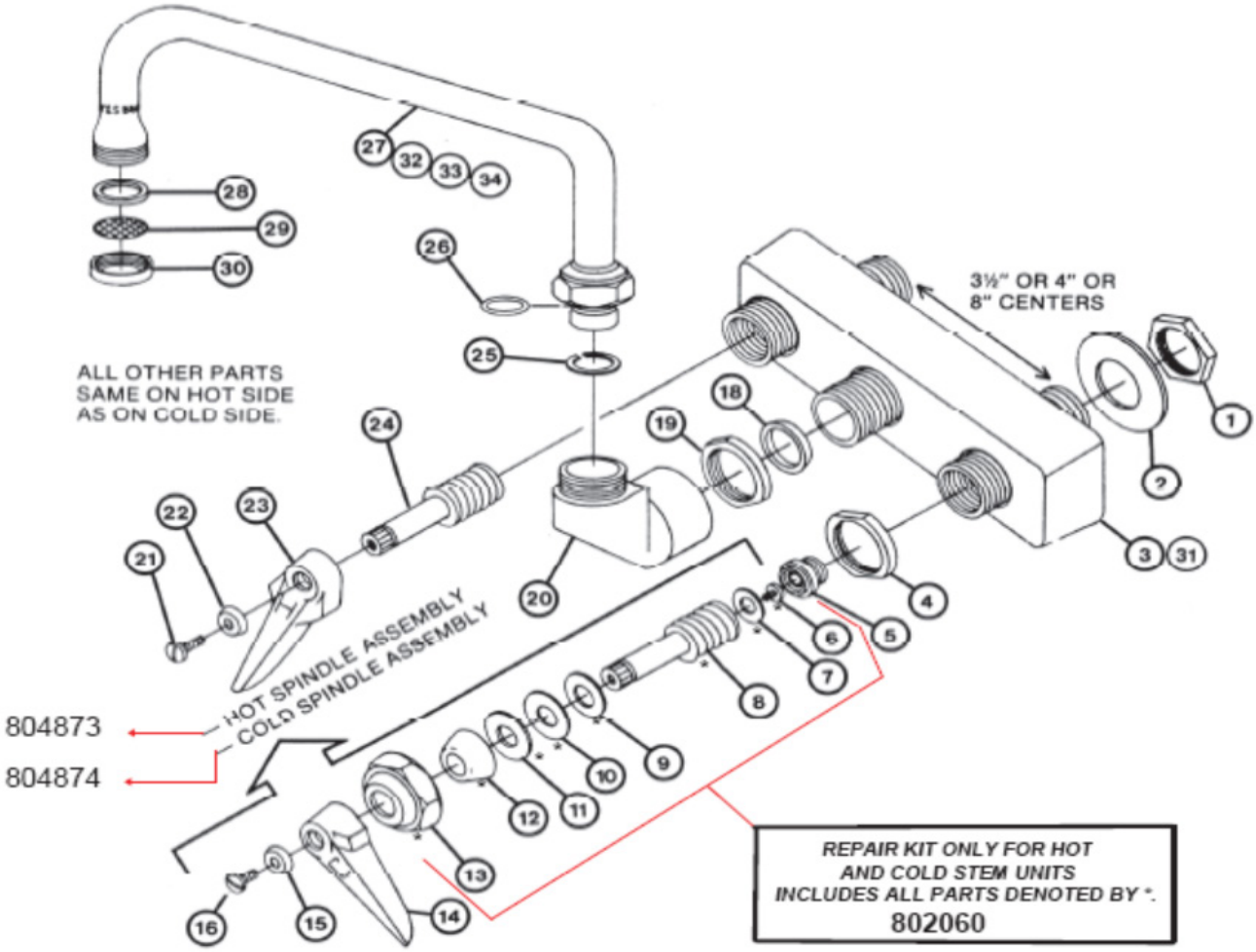

1	**1801-20**	NUT
2	**999-45**	WASHER
3	**1258-40**	ESCUTCHEON (3-1/2" & 4" CENTERS)
4	**712-25**	LOCK NUT
5	**804447**	REMOVABLE SEAT
6	**933-45**	SEAT SCREW
7	**800030**	SEAT WASHER
8	**809091**	SPINDLE - (RIGHT-HAND)
9	**986-45**	BRASS WASHER
10	**804869**	RUBBER WASHER
11	**804870**	STAINLESS STEEL WASHER
12	**804868**	PACKING
13	**599-25**	BONNET
14	**800930**	LEVER HANDLE (COLD)
15	**800940**	INDEX BUTTON (COLD)
16	**800950**	SCREW
18	**754-20**	RING, WEDGE
19	**712-25**	LOCK NUT

20	**809554**	EL KNOB
21	**800950**	SCREW
22	**800945**	INDEX BUTTON (HOT)
23	**800935**	LEVER HANDLE (HOT)
24	**809092**	SPINDLE (LEFT-HAND)
25	**801478**	WASHER
26	**1074-45**	"O"-RING
27	**2877-40**	NOZZLE - 6" (a)
28	**1048-45**	WASHER
29	**1323-45**	SCREEN
30	**863-25**	NOZZLE TIP
31	**1259-40**	EXCUTCHEON FOR 8" CENTERS
32	**5950-40**	NOZZLE - 8" (a)
33	**5951-40**	NOZZLE - 10" (a)
34	**5952-40**	NOZZLE - 12" (a)
(a) A 1074-45 "O"-RING AND A 1028-45 WASHER ARE INCLUDED WHEN ORDERING NOZZLE.		

T & S - MEDICAL LAVATORY FAUCETS
B-2865, 2865-L, B-2866, 2866-L, B-2867, 2867-L

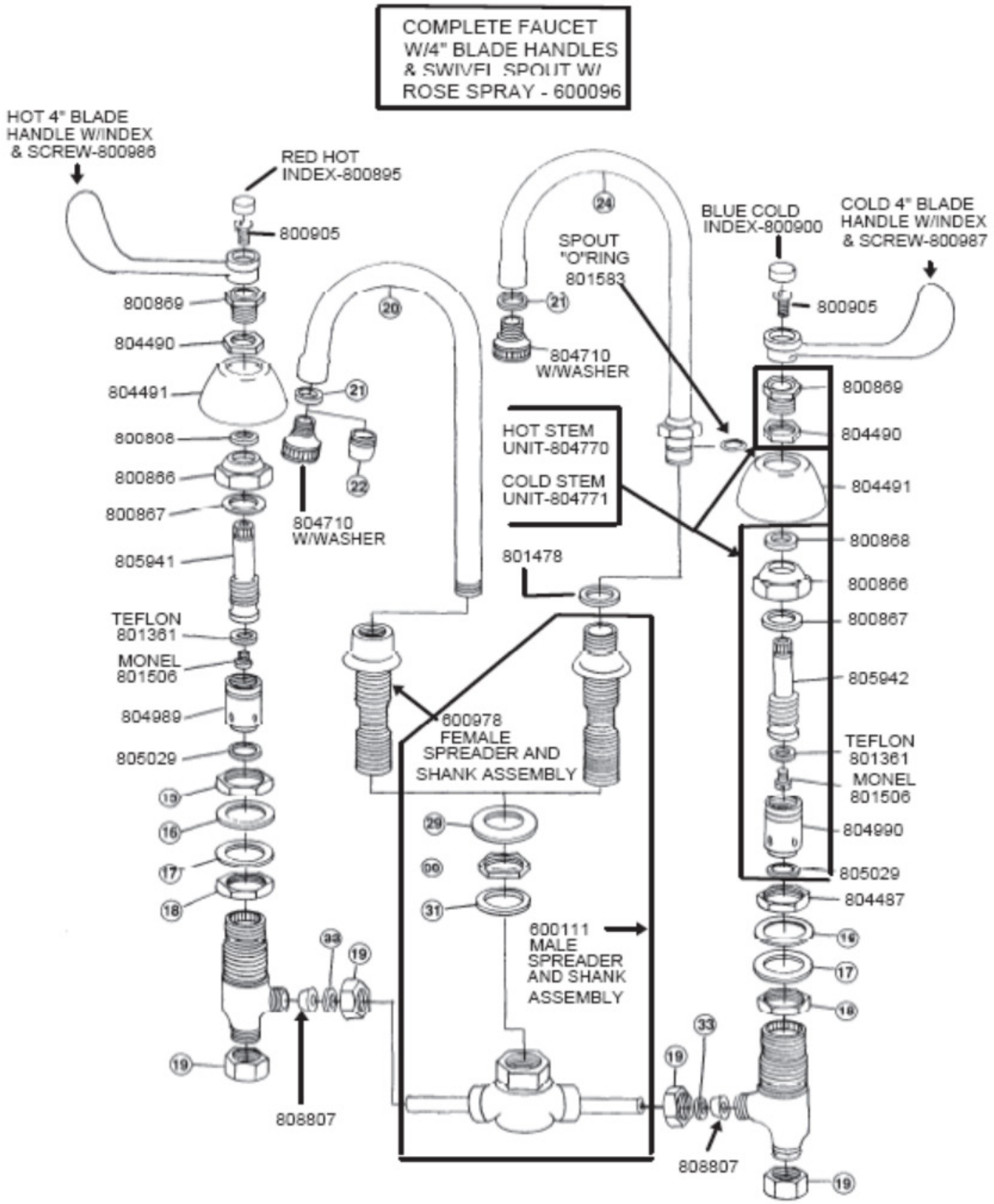

10

T & S - B-111 BASE FAUCETS & ACCESSORIES

B-160, B-200, 201, 202, 250, 251, 252,
301 SWIVEL BASE FAUCET

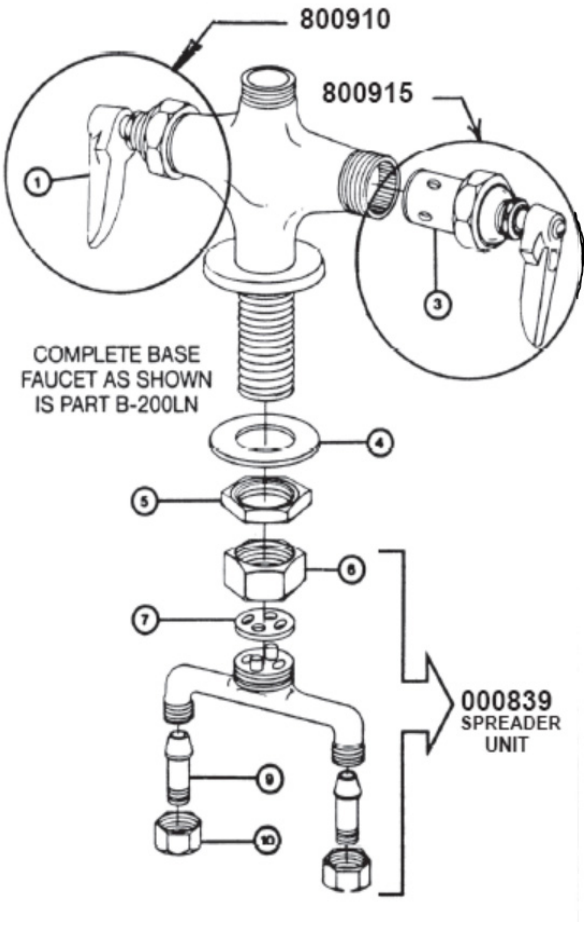

1	**800910**	HOT SPINDLE ASSEMBLY
3	**800915**	COLD SPINDLE ASSEMBLY
FOR EXPLODED VIEW OF PARTS FOR 1 & 3. SEE SPINDLE ASSEMBLIES P. 10-14		
4	**2290-45**	SHANK WASHER
5	**965-45**	NUT
6	**736-20**	SPREADER NUT
7	**800920**	GASKET
9	**1592-20**	TAILPIECE (REQUIRES 2)
10	**958-20**	TAILPIECE NUT (REQUIRES 2)

B-111, 112, 113, 114, B-115, B-117, B-126, B-126-VB,
B-160, B-176 RIGID PRE-RINSE BASE FAUCET

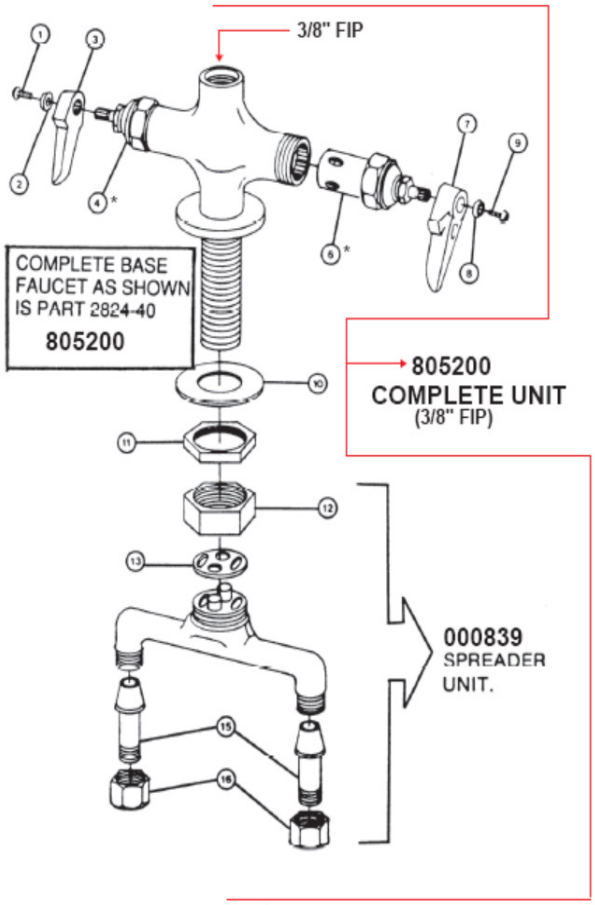

1	**800950**	HANDLE SCREW
2	**800945**	INDEX BUTTON (HOT)
3	**800935**	LEVER HANDLE (HOT)
4	***802435**	HOT SPINDLE ASSEMBLY
6	***802436**	COLD SPINDLE ASSEMBLY
FOR EXPLEDED VIEW OF PARTS FOR 4 & 6. SEE SPINDLE ASSEMBLIES P. 10-14 *THESE STEMS HAVE RUBBER PISTON WASHERS & SPRINGS		
7	**800930**	LEVER HANDLE (COLD)
8	**800940**	INDEX BUTTON (COLD)
9	**800950**	HANDLE SCREW
10	**2290-45**	WASHER
11	**965-45**	NUT
12	**736-20**	SPREADER NUT
13	**800920**	GASKET
15	**1592-20**	TAILPIECE
16	**958-20**	TAILPIECE NUT

T & S - EASYINSTALL PRE-RINSE UNIT

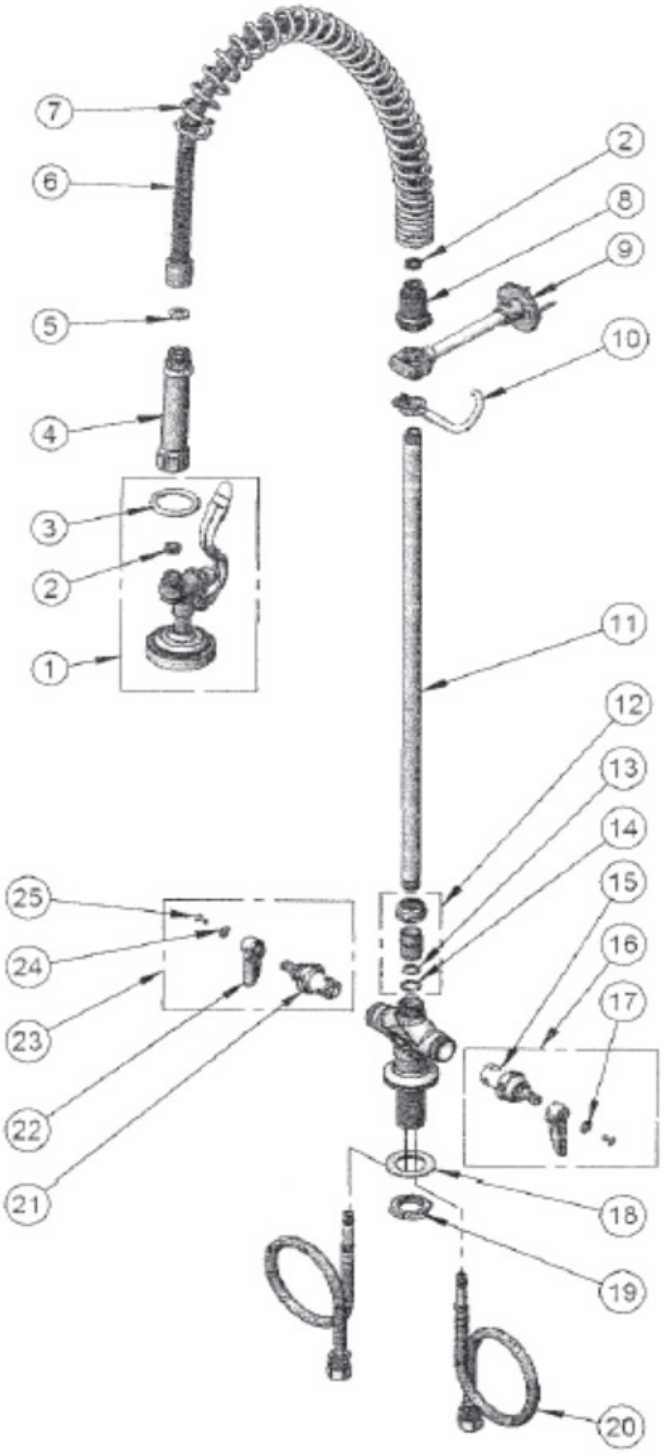

1	**800870**	SPRAY VALVE ASSEMBLY
2	**804421**	#27 WASHER
3	**808025**	SPRAY VALVE HOLD DOWN RING
4	**801134**	GRIP HANDLE ASSEMBLY
5	**805069**	WASHER, B-0100 HOSE BARREL
6	**800975**	44” FLEX HOSE ASSEMBLY
7	**800991**	EasyInstall OVERHEAD SPRING
8	**805030**	SPRING BODY
9	**805805**	6” WALL BRACKET ASSEMBLY
10	**805803**	FINGER HOOK ASSEMBLY
11	**803990**	3/8” NPT x 24” LONG RISER
12	**806437**	EasyInstall KIT*
13	**807091**	O-RING
14	**807092**	STAR WASHER, ANTI-ROTATION
15	**802435**	COLD ETERNA SPINDLE ASSEMBLY WITH SPRING CHECK
16	**802436**	COLD ETERNA SPINDLE ASSEMBLY WITH SPRING CHECK
17	**800940**	BLUE INDEX - CW
18	**006598**	LOCK WASHER
19	**807923**	LOCK NUT
20	**806228**	FLEXIBLE CONNECTOR HOSE
21		HOT ETERNA SPINDLE ASSEMBLT WITH SPRING CHECK
22	**808420**	LEVER HANDLE
23	**802435**	HOT ETERNA SPINDLE ASSEMBLY WITH SPRING CHECK, INDEX & SCREW
24	**800945**	RED INDEX - HW
25	**800950**	LEVER HANDLE SCREW

T & S - B-107 SPRAY VALVE AND SPRAY VALVE ASSEMBLY

1	**753-25**	PUSH BUTTON
2	**885-45**	BONNET SPRING
3	**974-45**	BONNET WASHER
4	**1097-45**	PACKING
5	**974-45**	BONNET WASHER
6	**608-25**	BONNET
7	**1040-45**	BINDING WASHER
8	**802011**	SEAT WASHER
9	**803197**	STEM
11	**808025**	HOLD-DOWN RING
12	**804032**	SQUEEZE VALVE HANDLE
	800990	HANDLE SCREW
	800995	HANDLE NUT
	801305	HOSE WASHER
	694-40	SHORT NIPPLE
	19-40	SPRAY CUP
	800955	RUBBER RING
	800960	SPRAY FACE
	800965	SPRAY FACE SCREW - 1”

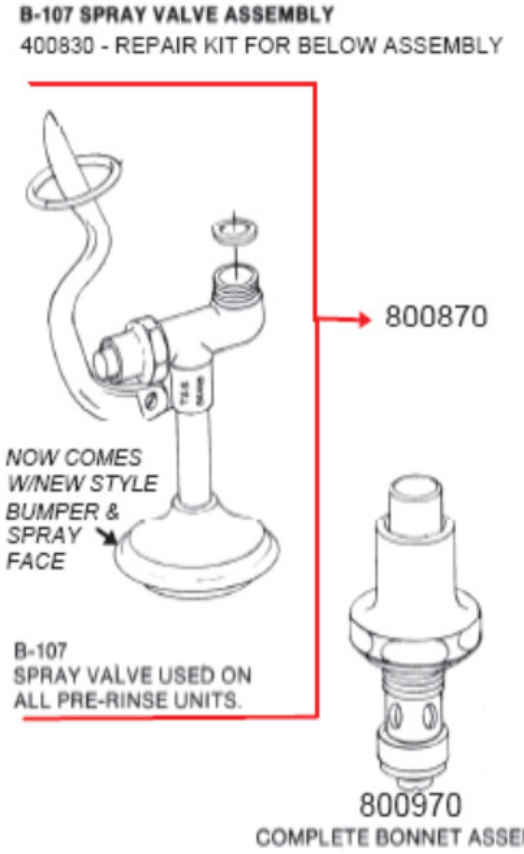

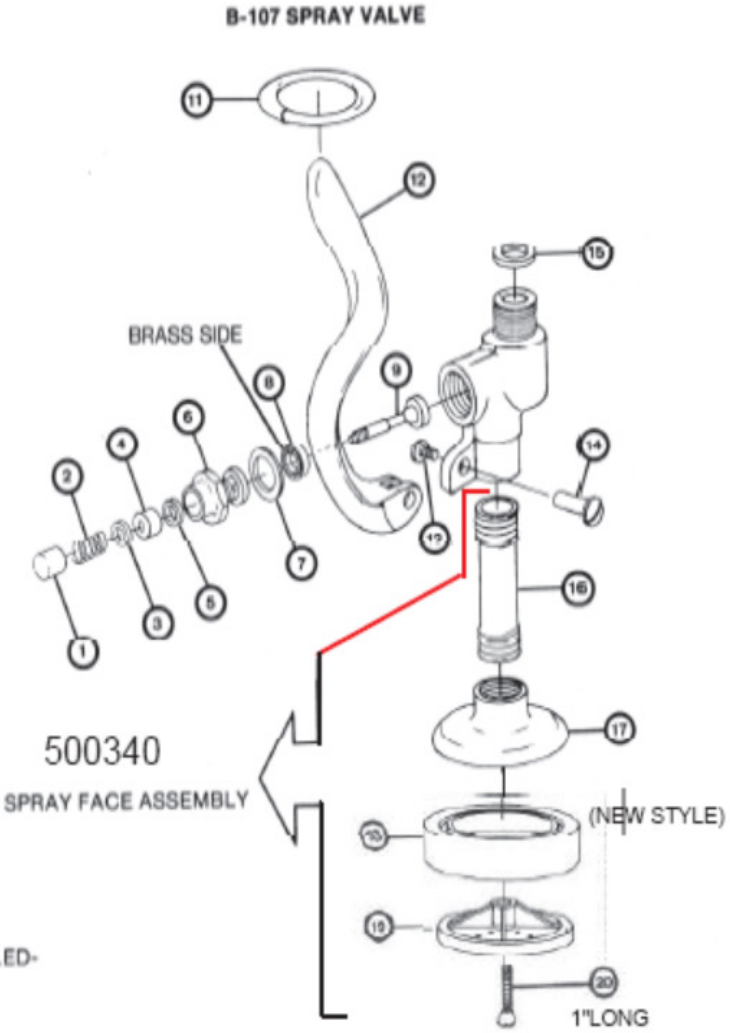

10

T & S PARTS

T&S STAINLESS STEEL HOSES W/HANDLE

603210 - 24”
003086 - 36”
800975 - 44”
800980 - 68”
001247 - 144”

SPRING

800981

GREY HANDLE ASSEMBLY ONLY

801310 - M X F
(MOST COMMON)
801311 - F X F

C.P. RISER

803990 - 24”
801668 - 18”
801148 - 12”

WALL BRACKET FOR 3/8” RISERS

805805 - 6”
800847 - 9”
800848 - 12”

SPRING BODY

805030

REBUILD KIT FOR SPRAY VALVE

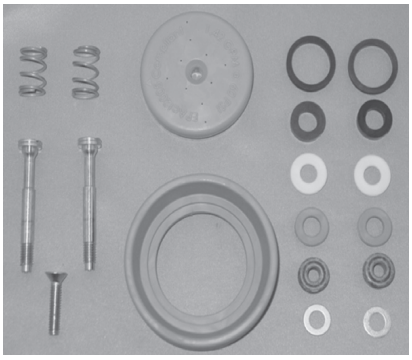

400830

ADD ON FAUCET W/ 6” NOZZLE
(INCLUDES 4-1/2” X 3/8” C.P. NIPPLE)

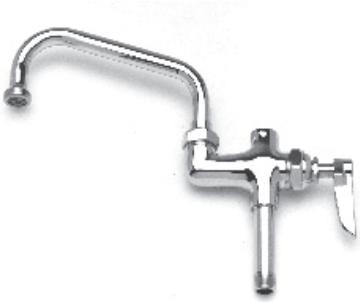

000764

SPRAY VALVE (ASSEMBLY)
(LESS GREY HANDLE)

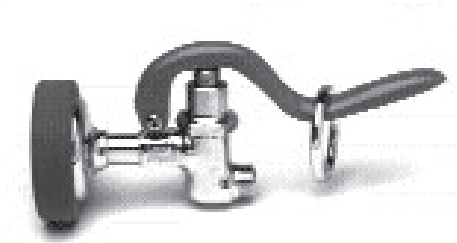

800870

SPRAY FACE ASSEMBLY

500340

SPRAY FACE

800960
800965 - SCREW ONLY

GREY RUBBER RING FOR SPRAY FACE

800955

ADAPTER TO ATTACH SWING SPOUTS TO RISER

801685

T & S - B-1400 REEL KLEEN

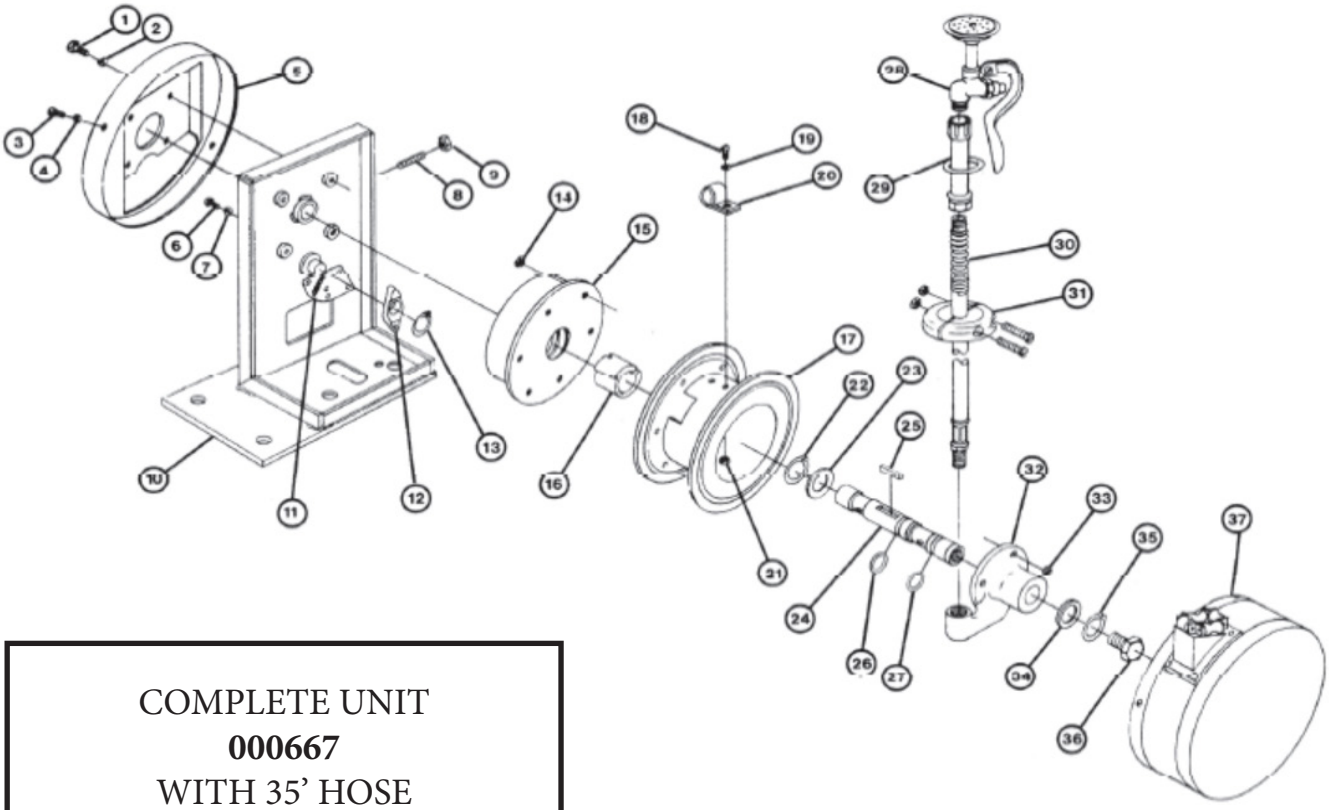

COMPLETE UNIT
000667
WITH 35' HOSE

1	**2507-45**	BOLT (REQUIRES 4)
2	**2458-45**	WASHER (REQUIRES 4)
3	**2500-45**	SCREW (REQUIRES 4)
4	**2458-45**	WASHER (REQUIRES 4)
5	**2508-45**	STAND COVER
6	**2505-45**	SCREW
7	**2459-45**	WASHER
8	**2463-45**	SET SCREW
9	**2498-45**	NUT
10	**2497-45**	STAND ASSEMBLY
11	**807293**	*RACHET SPRING
12	**000485**	*RACHET LEVER
13	**2447-45**	RETAINING RING
14	**2448-45**	NUT (REQUIRES 6)
15	**804889**	*MAINSPRING, CUP, & RACHET ASSY.
16	**2499-45**	HUB, MAINSPRING
17	**2502-45**	DRUM ASSEMBLY
18	**2500-45**	SCREW
19	**2458-45**	WASHER
20	**2501-45**	CLAMP

21	**2457-45**	NUT
22	**2451-45**	RETAINING RING
23	**2453-45**	WASHER
24	**2468-45**	MAINSHAFT
25	**2481-45**	CARTER PIN
26	**000486**	*O-RING
27	**000486**	*O-RING
28	**800870**	SPRAY VALVE ASSEMBLY
29	**801311**	HANDLE
30	**008635**	HOSE ASSEMBLY - 35 FEET
31	**008278**	HOSE STOP ASSEMBLY
32	**2467-45**	SWIVEL
33	**2448-45**	NUT (REQUIRES 3)
34	**2453-45**	WASHER
35	**2451-45**	RETAINING NUT
36	**2503-45**	PIPE PLUG
37	**2466-45**	COVER AND GUIDE ASSEMBLY

T & S - SWING NOZZLES & SPOUTS

To add a different length or style swing nozzle to a faucet other than what is ordinarily furnished ADD as a suffix the model number of the dimensions on nozzle ± 1/4"

Swing Nozzles

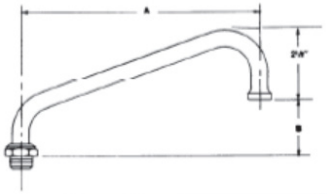

Model No.	STANDARD SIZES A	B
800863	6"	2"
800855	8"	2¼"
800864	10"	3"
800860	12"	3¾"
800861	14"	4½"
800849	16"	5"
800862	18"	5¾"

SPOUT "O" RING - 801583

Double Joint Nozzles

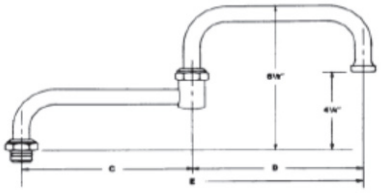

Model No.	STANDARD SIZES C	D	E
66X	6"	6"	12"
67X	9"	6"	15"
68X	12"	6"	18"
69X	12"	12"	24"

Note 1. In addition to above standard sizes, any combination of C and D are available.
2. Front Section D on double joint nozzle is available separately and fits faucets directly.

Polished Chromium Plated Cast Nozzle w/ Aerator

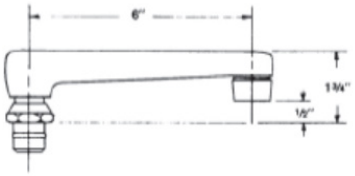

Model No. CS-6 - Cast Nozzle

Soap Dish Nozzles - a swing nozzle w/ soap dish canb be supplied on T&S faucets in lieu of the standard nozzle.

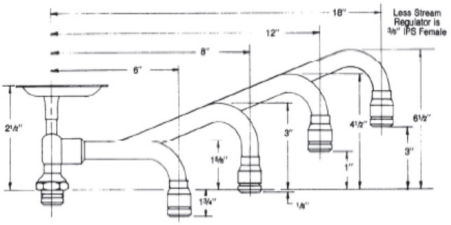

Model No.	STANDARD SIZES
160X	6"
161X	8"
162X	12"
163X	18"

Big-Flo Spouts - For use w/ B-290 series3/

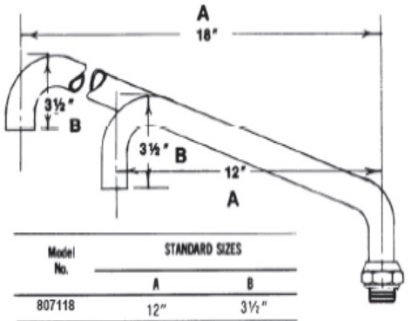

Model No.	STANDARD SIZES A	B
807118	12"	3½"
807119	18"	5½"

166X 9" NZL

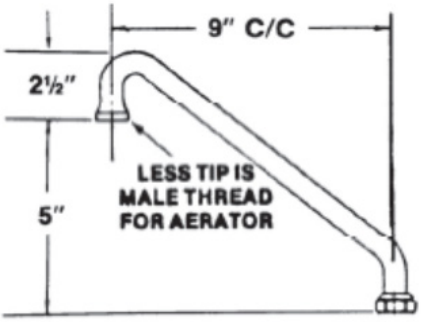

Vacuum Breaker Swing Nozzle W/ Stream Regulator - Vacuum breaker nozzles can be supplied on T&S faucets, in lieu of nozzles ordinarily furnished, to meet local code requirements.

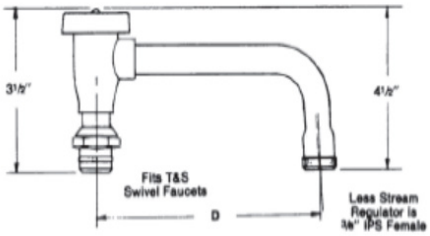

Model No.	Dimension "D"
600155	5¾"
600159	8¾"
000983	11¾"

801270 - 3/8" Vacuum Breaker Unit Complete

800101 - Vacuum Breaker Repair Kit Only

Big-Flo Spouts - For use w/ B-290 series

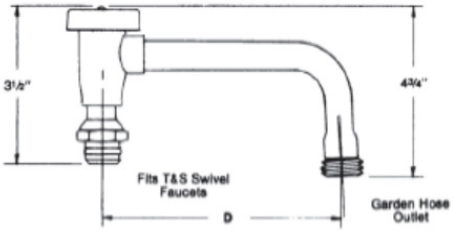

Model No.	Dimension "D"
B-409-2	5¾"
B-409-3	8¾"
B-409-4	11¾"

Note: All nozzles shown are interchabgeable and fit T&S swing nozzle faucets. Fine male thread on outlet of swing, double joint and cast nozzle is 55/64" - 27 aerator thread with a stream regulator.
(See page A-8 & A-9 for other outlet accessories.

T & S - GOOSENECKS & CONVERSION

To add a different size gooseneck to a faucet other than what is ordinarily furnished ADD as a suffix the model number of the dimensions on goosenecks ± 1/4"

RIGID GOOSENECK

3/8" IPS polished chrome plated gooseneck with stream regulator. 120X is the size ordinarily furnished as standard on rigid gooseneck faucets.

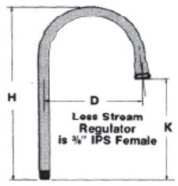

Model No.	D	H	K
800872	2¾"	8"	4½"
802465	5¾"	9½"	4½"
802466	5¾"	11½"	6½"
802467	5¾"	12½"	7½"
804177	8¾"	10¾"	4½"

STANDARD SIZE

SWIVEL GOOSENECK

Polish chrome plated gooseneck. 133X is the size ordinarily furnished as standard. 131X outlet is at 19° 131X & 133X have 55/64" .27 aerator thread when outlet is removed. All other swivel goosenecks have 3/8" IPS FE when outlet is removed.

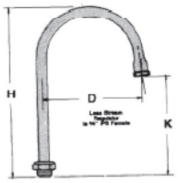

Model No.	D	H	K
601146	2¾"	4½"	2½"
808002	2½"	8¾"	5½"
802460	5¾"	8¾"	4¾"
804015	8¾"	11¾"	5½"

STANDARD SPOUT

CONVERSION ADAPTERS

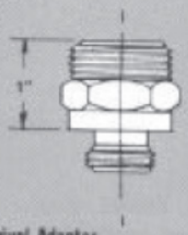

400835

B-412
Rigid to Swivel Adapter
Used for field conversion where a faucet with 3/8" IPS outlet is installed and a swivel gooseneck or nozzle is required.

Note: Use (2) 7X washers part #986-45 to make nozzle or gooseneck rigid.

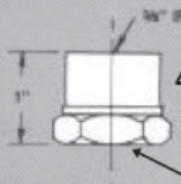

400840

805852 GASKET

B-413
Swivel to Rigid Adapter
Used for field conversion where a faucet with swivel outlet is installed and a rigid pipe gooseneck is required.

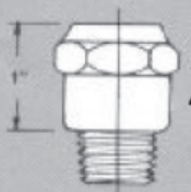

403357

B-414
Gooseneck Coupling
Adapts a 3/8" IPS pipe gooseneck to faucets with 3/8" IPS outlet providing either a swivel or union connection.

VACUUM BREAKER GOOSENECKS

B-405-2,-3,-4. Rigid polish chrome plated gooseneck with vacuum breaker

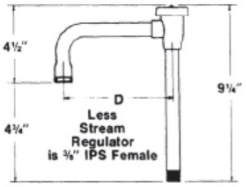

Model No.	D
B-405-2	5¾"
B-405-3	8¾"
B-405-4	11¾"

SWIVEL VACUUM BREAKER GOOSENECKS

B-406-2,-3,-4. Rigid polish chrome plated gooseneck with swivel vacuum breaker

B-407-2,-3,-4. Swivel polish chrome plated gooseneck with vacuum breaker

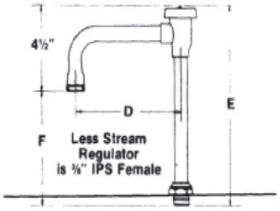

Model No.	D	E	F
B-406-2	5¾"	9½"	5"
B-406-3	8¾"	9½"	5"
B-406-4	11¾"	9½"	5"
B-407-2	5¾"	9¼"	4¾"
600070	8¾"	9¼"	4¾"
809075	11¾"	9¼"	4¾"

TT GOOSENECK

TT — 1 SWIVEL
TT — 2 RIGID

This gooseneck is to be used if special sizes are desired. Swivel style is 5/8" O.D. tubing. Polish chrome plated. Specify D, H and K dimensions required and if gooseneck is to be rigid or swivel type.

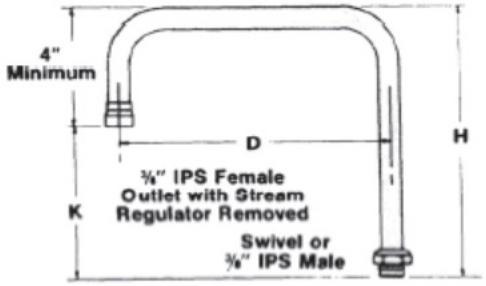

RANGE FAUCET NOZZLES

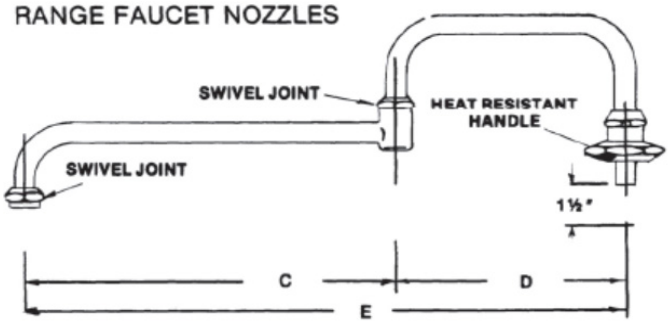

	C	D	E
178A	12"	6"	18"
184A	12"	12"	24"

10

T & S - AERATOR & MISCELLANEOUS OUTLETS

AERATOR OUTLETS - 55/64" - 27 FEMALE AERATOR THREAD. FITS GOOSENECKS & NOZZLES (SEE PAGES 10-34 & 10-35

805070 Aerator - Non-splash aerator may be supplied instead of plain tip stream regulator ordinarily furnished.

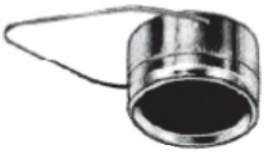

B-199-6 Vandal Resistant Aerator - Non-splash aerator attached w/ tool supplied. Removable only w/ tool otherwise spins freely.

B-199-12 Vandal Resistant Aerator w/ Anti-Hose Ring - Non-splash aerator attached w/ tool supplied. Unit has protruding ring to prevent attaching a hose. to aerator. Removable only w/ tool otherwise spins freely.

AERATOR OUTLETS - 3/8" IPS MALE THREAD. FITS GOOSENECKS (SEE PAGES A-6 & A-7)

406996 Aerator - Non-splash aerator may be supplied instead of plain tip stream regulator ordinarily furnished.

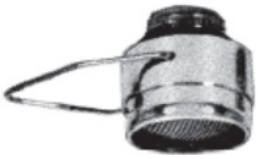

B-199-7 Vandal Resistant Aerator - Non-splash aerator attached w/ tool supplied. Removable only w/ tool otherwise spins freely.

B-199-13 Vandal Resistant Aerator w/ Anti-Hose Ring - Non-splash aerator attached w/ tool supplied. Unit has protruding ring to prevent attaching a hose. to aerator. Removable only w/ tool otherwise spins freely.

AERATOR OUTLETS - 13/16" - 27 MALE AERATOR THREAD. FITS LAVATORY SPOUTS.

B-199-3 Aerator - Non-splash aerator is slotted and is attached by broad faced tool or large screwdriver

B-199-8 Vandal Resistant Aerator - Non-splash aerator attached w/ tool supplied. Removable only w/ tool otherwise spins freely.

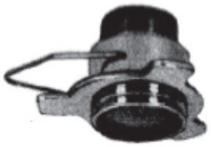

B-199-14 Vandal Resistant Aerator w/ Anti-Hose Ring - Non-splash aerator attached w/ tool supplied. Unit has protruding ring to prevent attaching a hose. to aerator. Removable only w/ tool otherwise spins freely.

AERATOR OUTLETS - MISCELLANEOUS OUTLETS - 55/64" FEMALE AERATOR THREADS.

B-PT Stream Regulator - Plain outlet w/ screen & washer. Supplied on nozzles & some goosenecks as standard equipment.

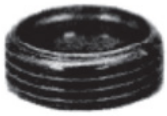

804705 Garden Hose Outlet - Fits outlet of nozzles & many goosenecks to convert to 3/4" male garden hose thread. Adapter is bonded to nozzle or gooseneck when furnished on original equipment.

B-197-1 Anti-Hose Plain Tip - Use to prevent attachment of hose. Adapter bonded to nozzle or gooseneck when furnished on original equipment.

AERATOR OUTLETS - MISCELLANEOUS OUTLETS - 3/8" IPS MALE THREAD.

B-LT Stream Regulator - Stream regulator w/ washer. Supplied on rigid goosenecks unless otherwise specified.

804700 Garden Hose Outlet - Fits outlet of goosenecks & many nozzles to convert to 3/4" male garden hose thread.

B-197-2 Anti-Hose Plain Tip - Used on goosenecks & nozzles to prevent attachment of hose. Bonded to outlet of gooseneck when furnished on original equipment.

803705 Serrated Hose End - Serrated tip to fit many goosenecks & nozzles. Accepts rubber or plastic tubing up to 1/2" inside diameter.

Rosespray - All metal, chromium plated sprayhead.

B-103-HV High Velocity Rosespray - Same as B-103 except face has smaller outlet holes increasing water velocity. Useful for cleaning or where strong spray is required.

10

T & S - DOUBLE PEDAL VALVE ASSEMBLY

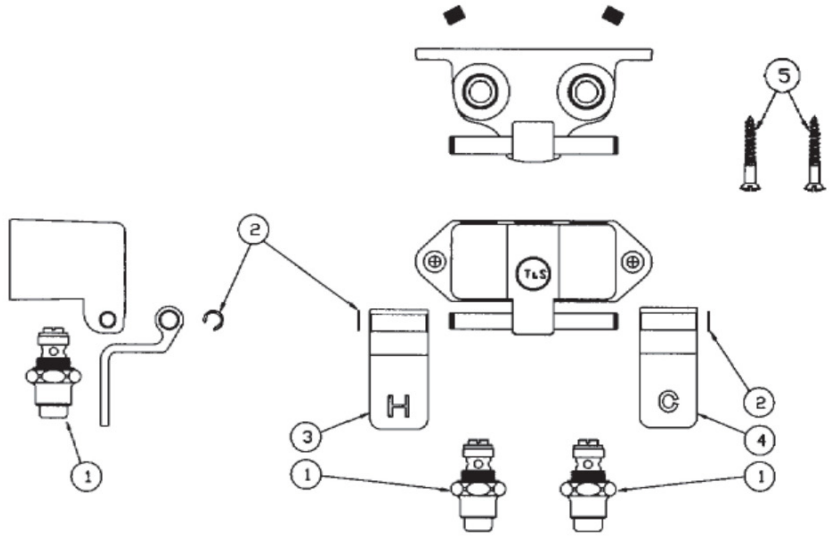

1	**801337**	ASM, BONNETT
2	**805216**	RING, 'E'-STYLE, 3/8" SHAFT
3	**802542**	PEDAL, FOOT - HOT
4	**805249**	PEDAL, FOOT - COLD
5	**807858**	SCREW, WALL MOUNT

METERING CARTRIDGE

608204

HANDLE AND CARTRIDGE ASSEMBLY

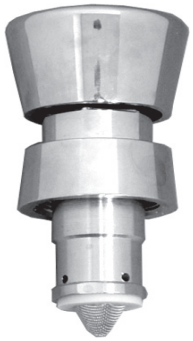

808460 - BLANK
808461 - HOT
808462 - COLD

HANDLE ONLY

805538 - BLANK
805539 - HOT
805540 - COLD

10

T & S - KNEE ACTION VALVE

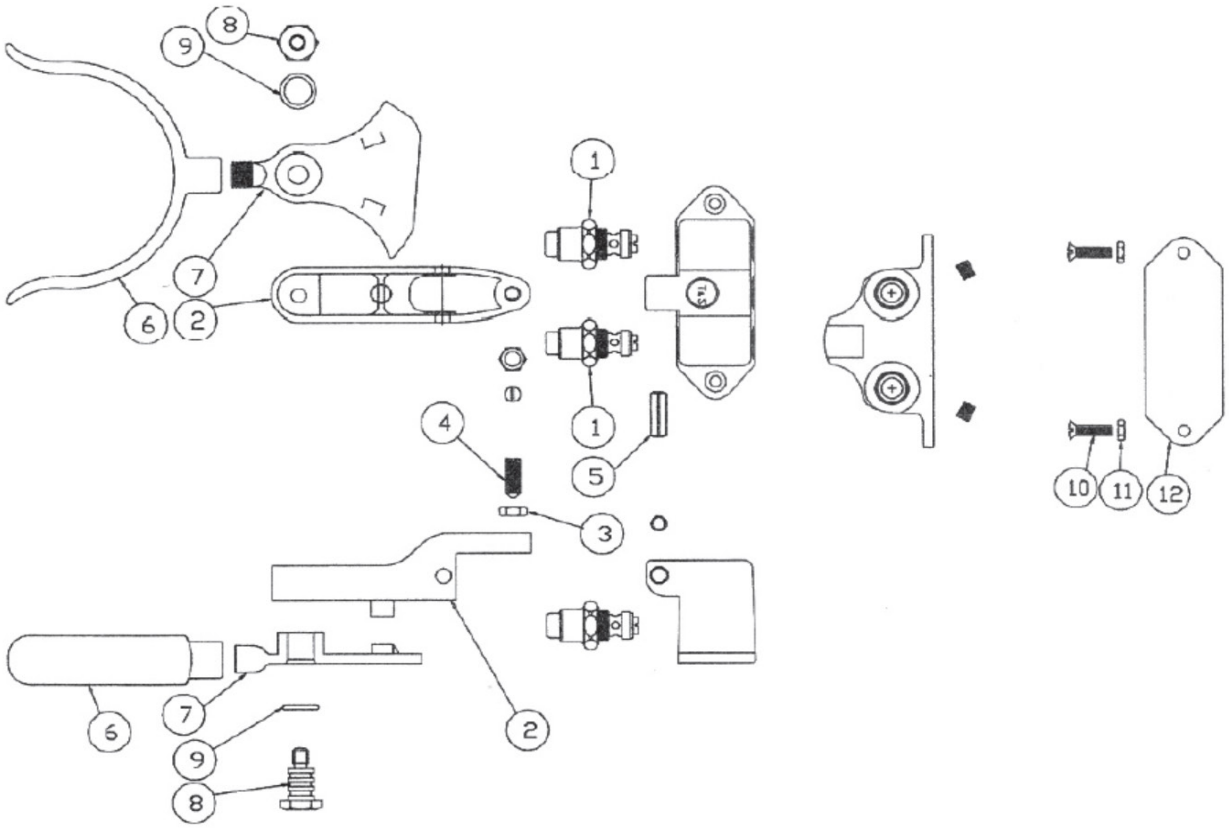

1	**001786**	ASM, BONNET
2	**808888**	CENTER LEVER, KNEE ACTION VALVE
3	**800450**	LOCKNUT, ADJUSTABLE
4	**806880**	SET SCREW, NYLON
5	**801463**	ROLL PIN
6	**806881**	STIRRUP, KNEE VALVE
7	**806882**	CAM, KNEE VALVE
8	**806883**	CAM BOLT, KNEE VALVE
9	**801378**	O-RING
10	**806884**	SCREW, WALL MOUNT
11	**806885**	NUT, MACHINE 1/4-20
12	**806886**	COVER PLATE

WILLOUGHBY SINGLE TEMPERATURE PNEUMATIC METERING VALVE ASSEMBLY

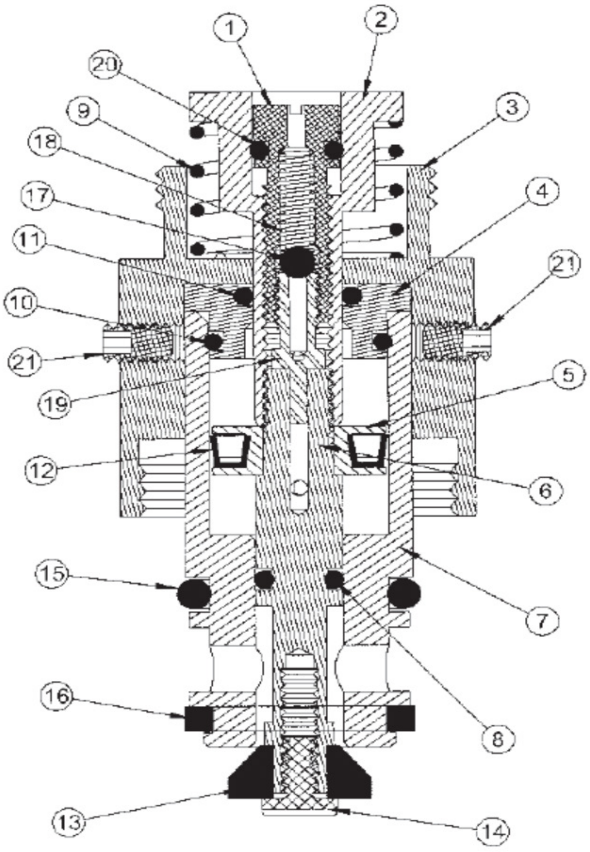

1	**810040**	SCREW, BLEEDER ADJUST
2	**810041**	BLEEDER STEM
3	**810042**	INTERMEDIATE NUT
4	**810043**	INSERT CAP
5	**810044**	U-CUP HOLDER
6	**810045**	FAUCET WASHER STEM - METERING
7	**810046**	INSERT BODY, DELRIN
8	**810047**	O-RING(#008) #77035-I .175 ID x .070W STEM
9	**810048**	CARTRIDGE RETURN SPRING
10	**804348**	O-RING SLIP JOINT (#014)
11	**810049**	O-RING (#011) .301 ID x .070 W SELF LUBE
12	**810050**	U-CUP SEAL .625 OD x .375 ID
13	**810028**	FAUCET WASHER (NSF)
14	**810051**	SCREW #6-32 x 1/4" SLOTTED PANHD S/S, #77035-P
15	**810052**	O-RING 15MM ID x 3MM W
16	**810053**	O-RING TETRASEAL #77264-R .612 ID x .070 W
17	**810054**	CHECK BALL, .125" DIA
18	**810055**	SPRING FOR CHECKBALL
19	**810056**	SEAT CHECK VALVE
20	**810057**	O-RING (#008) .176 ID x .070 W
21	**810058**	SET SCREW

WILLOUGHBY SINGLE TEMPERATURE PNEUMATIC METERING VALVE ASSEMBLY

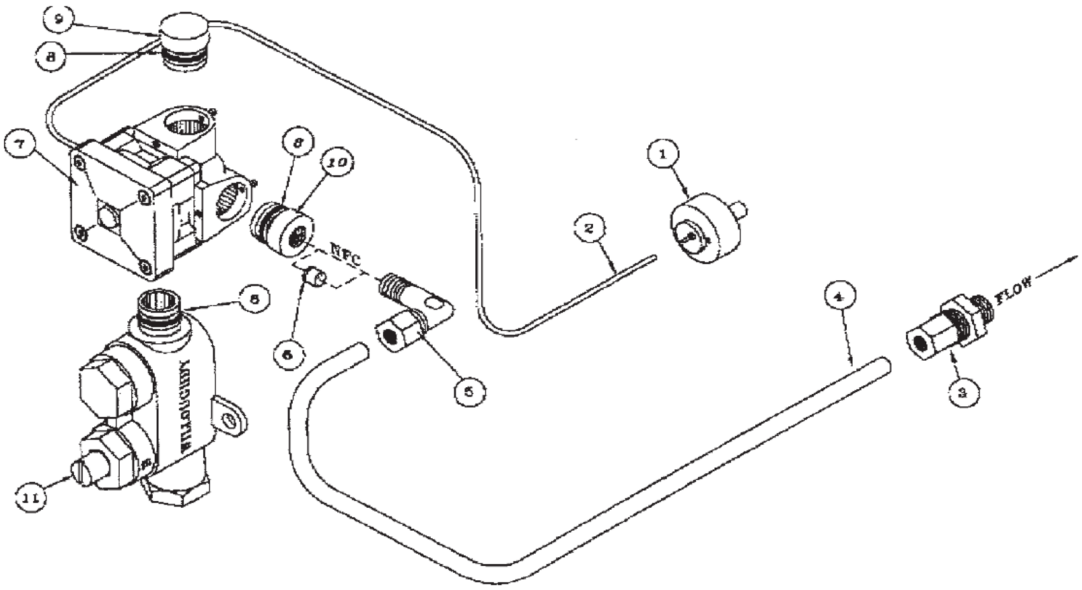

2	**809926**	RED PNEUMATIC TUBING - 1/16" ID
4	**809925**	3/8" OD FLEX TUBING
5	**809924**	3/8" TUBE X 1/4" MPT ELBOW
7	**804161**	PNEUMATIC VALVE ASSEMBLY W/ TIMER ADJUSTMENT

CHECK STOP/STRAINER ASSEMBLY

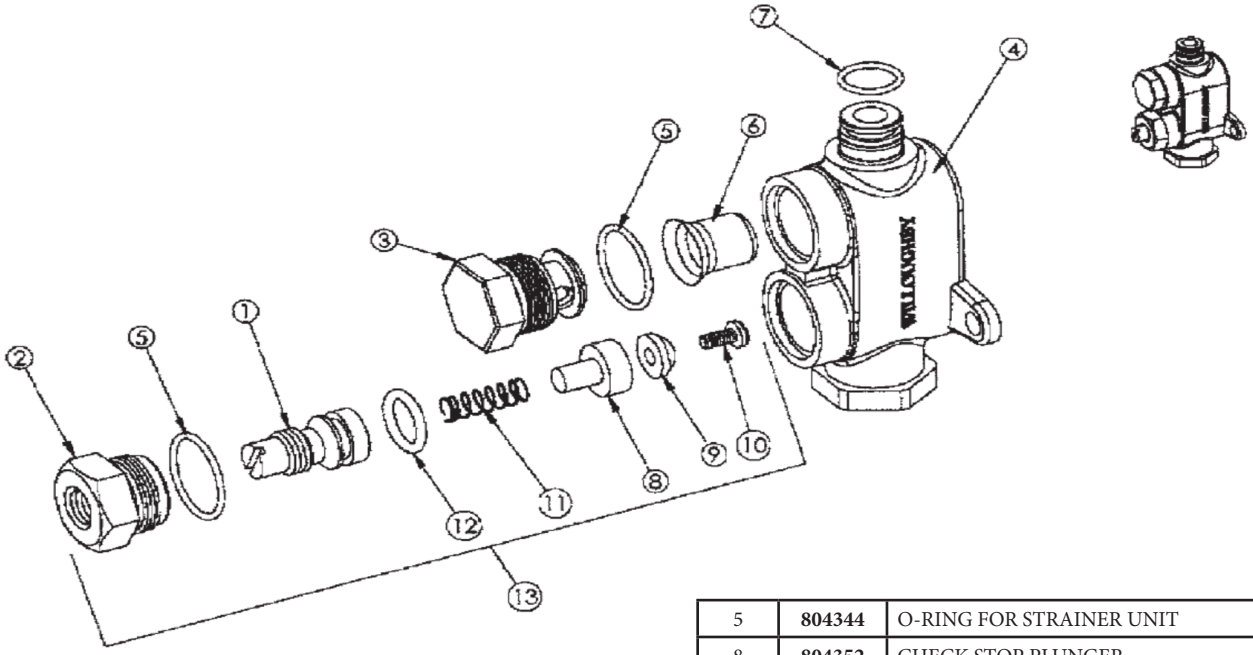

5	**804344**	O-RING FOR STRAINER UNIT
8	**804352**	CHECK STOP PLUNGER
9	**804145**	CHECK STOP WASHER
10	**804353**	SCREW FOR CHECK STOP WASHER
11	**8044354**	SPRING FOR CHECK STOP
12	**804356**	O-RING FOR STOP ASSEMBLY
13	**809929**	COMPLETE STOP VALVE REPAIR KIT

WILLOUGHBY DIAPHRAGM PUSH BUTTON PUMP (STANDARD)

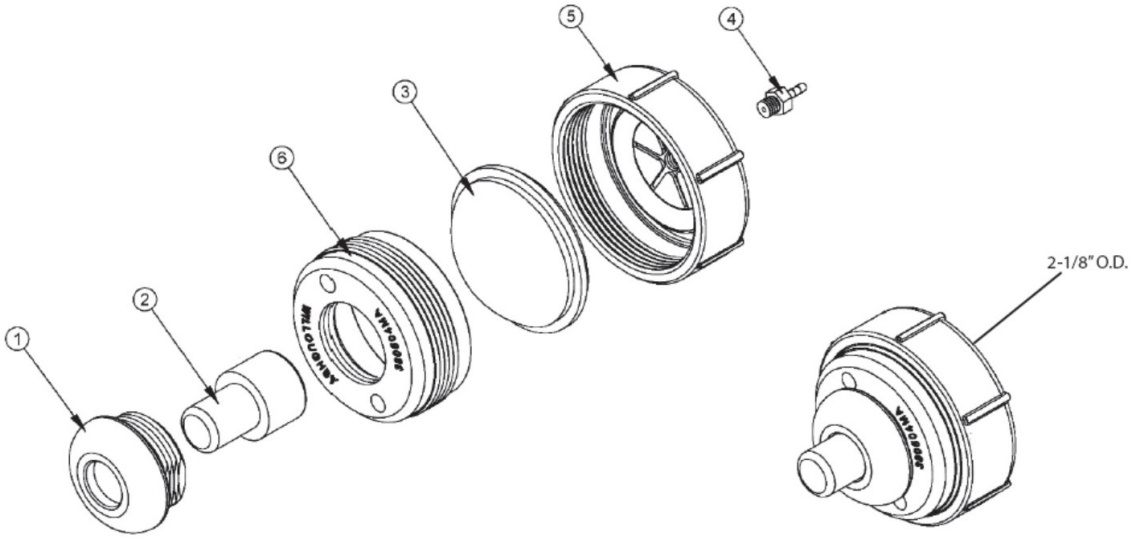

PUSH BUTTON ASSEMBLY

804386

1	**380124**	SLEEVE, DIAPHRAGM PUMP
2	**600057**	PUSHBUTTON, DIAPHRAGM PUMP
3	**600201**	DIAPHRAGM FOR PNEUMATIC PUMP, NEOPRENE
4	**809928**	FITTING HOSEBARB #10-32 x .0625
5	**809927**	BODY, DIAPHRAGM PUMP, MOLDED
6	**380504MA**	CAP, DIAPHRAGM PUMP, MOLDED

WILLOUGHBY DUAL TEMPERATURE PNEUMATIC METERING VALVE ASSEMBLY WITH FLEXIBLE SUPPLIES

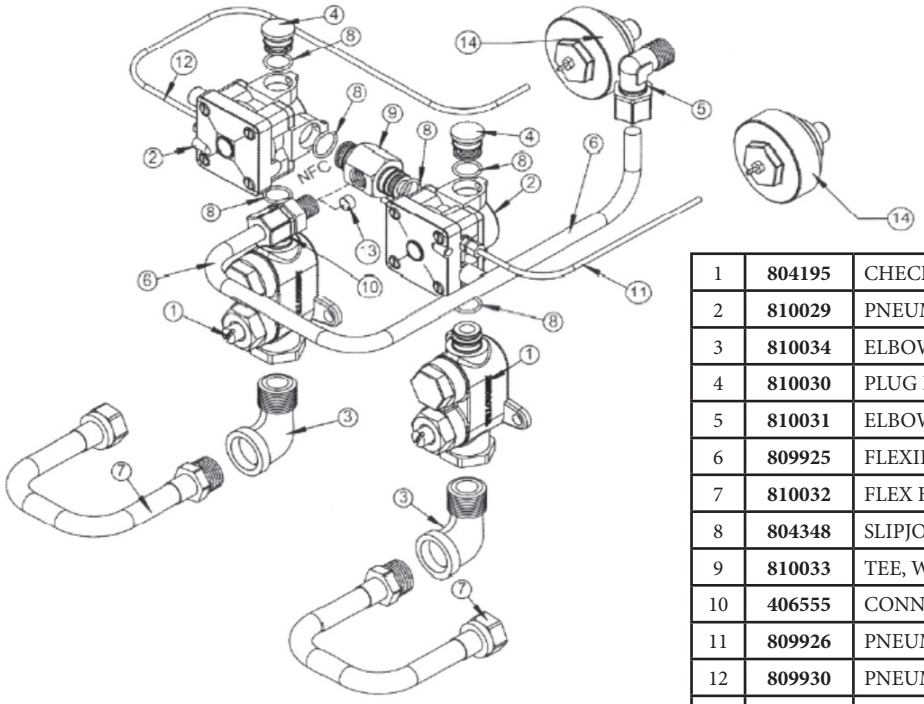

1	**804195**	CHECKSTOP STRAINER ASSEMBLY
2	**810029**	PNEUMATI VALVE ASSEMBLY
3	**810034**	ELBOW - 1/2” NPT STREET
4	**810030**	PLUG FITTING
5	**810031**	ELBOW - 3/8” TUBE x 3/8” MPT
6	**809925**	FLEXIBLE TUBING 3/8” OD
7	**810032**	FLEX HOSE - 1/2” MPT x 1/2” FPT (20” LONG)
8	**804348**	SLIPJOINT O-RING (#14)
9	**810033**	TEE, WPPM-F MIXING
10	**406555**	CONNECTOR - 3/8” TUBE x 1/4” MPT
11	**809926**	PNEUMATIC TUBING 1/16” ID x 1/8” OD (RED)
12	**809930**	PNEUMATIC TUBING 1/16” ID x 1/8” OD (BLUE)
13	**806259**	FLOW CONTROL 0.5 GPM
14	**884477**	PUSHBUTTON DIAPHRAGM PUMP ASSEMBLY

PM SERIES PNEUMATIC VALVE REPAIR KITS

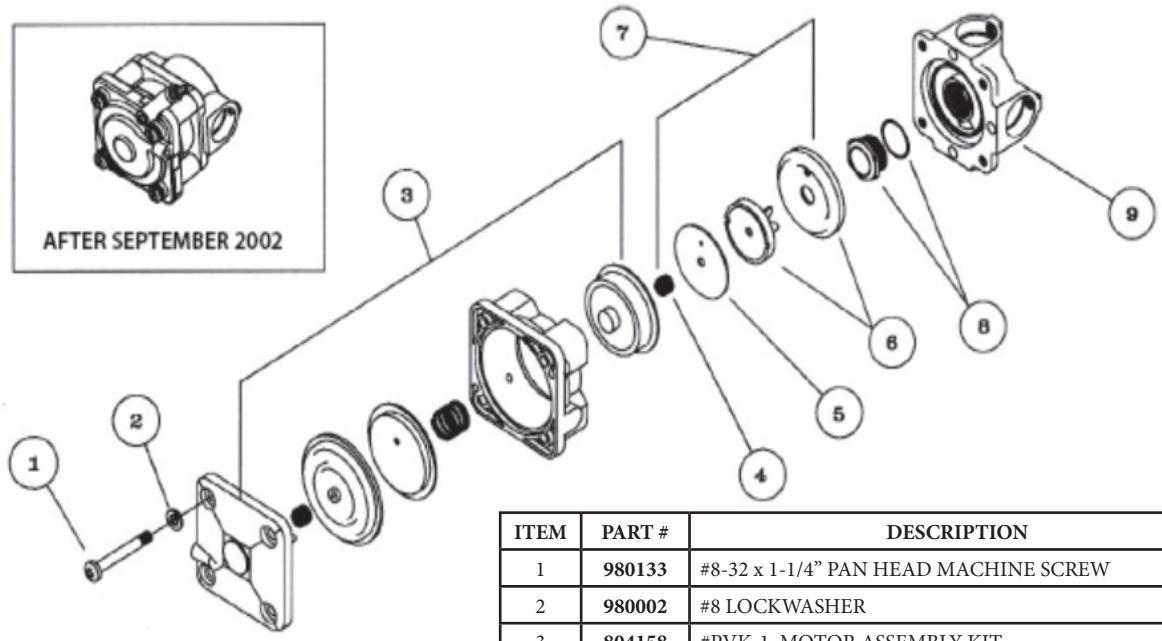

ITEM	PART #	DESCRIPTION	QTY
1	**980133**	#8-32 x 1-1/4” PAN HEAD MACHINE SCREW	4
2	**980002**	#8 LOCKWASHER	4
3	**804158**	#PVK-1, MOTOR ASSEMBLY KIT	1
4	**N/A**	ORIFICE PLATE SPRING	1
5	**N/A**	ORIFICE PLATE ASSEMBLY	1
6	**804143**	#PV-3, WATER DIAPHRAGM ASSEMBLY	1
7	**920195**	#PVK-2, DIAPHRAGM ASSEMBLY KIT (ITEMS 4,5,6)	1
8	**804189**	VALVE BASE SEAT AND O-RING	1
9	**808653**	BRASS VALVE BASE	1

WILKINS-ZURN TEMP-GARD REPLACEMENT KITSWW

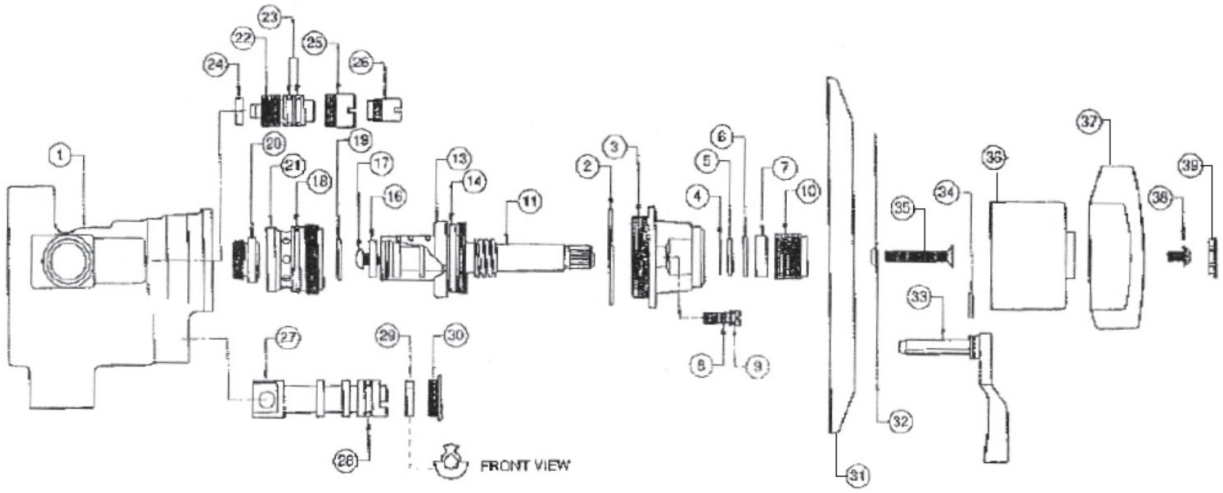

CONTROL STEM REPLACEMENT KIT - 808358	
2	CAP GASKET
11	CONTROL STEM
12	CONTROL PISTON
13	COLD WASHER RETAINER
14	COLD WASHER
15	CONTROL PISTON PLUNGER
16	HOT WASHER
17	WASHER RETAINING SCREW

SEAT REPLACEMENT KIT - 808359	
18	COLD SEAT O-RING
19	INT. COLD SEAT O-RING
20	HOT WATER SEAT
21	COLD WATER SEAT

CAP REPLACEMENT KIT - 808367	
2	CAP GASKET
3	BONNET
4	O-RING WASHER
5	O-RING
6	PACKING WASHER
7	RUBBER PACKING
8	ADJUSTMENT SCREW
9	ADJUSTMENT SCREW O-RING
10	PACKING NUT

CONTROL STEM WASHER REPLACEMENT KIT - 808361	
2	CAP GASKET
13	COLD WASHER RETAINER
14	COLD WASHER
15	CONTROL PISTON PLUNGER
17	WASHER RETAINING SCREW

DIVERTER/VOLUME CONTROL SPINDLE REPLACEMENT KIT - 808363	
27	A DIVERTER SPINDLE - BLACK
28	O-RING
29	DIVERTER KEY

VOLUME CONTROL SPINDLE REPLACEMENT KIT - 808364	
27	B DIVERTER SPINDLE - BLACK
28	O-RING
29	DIVERTER KEY

PACKING REPLACEMENT KIT - 808365	
2	CAP GASKET
4	O-RING WASHER
5	O-RING
6	PACKING WASHER
7	RUBBER PACKING

ADJUSTMENT SCREW REPLACEMENT KIT - 808366	
8	ADJUSTMENT SCREW
9	ADJUSTMENT SCREW O-RING

SERVICE STOP REPLACEMENT KIT (2) PER - 808362	
22	VALVE STOP
23	STOP O-RING
24	STOP GASKET

REPLACEMENT TOOL KIT - 808360
COOL SEAT TOOL
HOT SEAT TOOL

1	BODY
2	CAP GASKET
3	BONNET
4	O-RING WASHER
5	O-RING
6	PACKING WASHER
7	RUBBER PACKING
8	ADJUSTMENT SCREW
9	ADJUSTMENT SCREW O-RING
10	PACKING NUT
11	CONTROL STEM
12	CONTROL PISTON
13	COLD WASHER RETAINER
14	COLD WASHER
15	CONTROL SPIN-DLE PLUNGER
16	HOT WASHER
17	WASHER RE-TAINER SCREW
18	COLD SEAT O-RING
19	INT. COLD SEAT O-RING
20	HOT WASHER SEAT
21	COLD WASHER SEAT
22	SERVICE STOP SPINDLE

23	SERVICE STOP O-RING
24	STOP GASKET
25	STOP RETAINER
26	RETAINER SCREW
27A	DIV/VOL CON-TROL SPINDLE
27B	VOLUME CON-TROL
28	DIVERTER SPIN DLE O-RING
29	DIVERTER KEY
30	DIVERTER RE-TAINER
31	COVER
32A	DIAL-STANDARD
32B	DIAL-DIV/VOL CONTROL
32C	DIAL VOLUME CONTROL
33	DIVERTER HANDLE
34	CLIP
35	COVER SCREW
36	ESCUTCHEON
37	TEMPERATURE HANDLE
38	HANDLE SCREW
39	HANDLE BUTTON
40	COVER GASKET

ZURN - SINGLE BASIN METERING

CENTERSET METERING - Z-86500

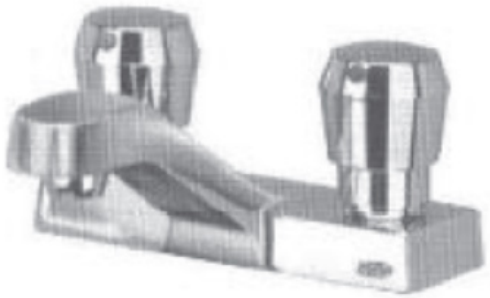

600158 - COMPLETE FAUCET

CENTERSET METERING - Z-86500

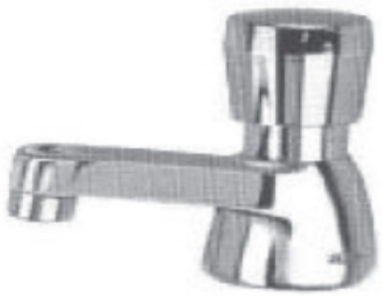

600158 - COMPLETE FAUCET

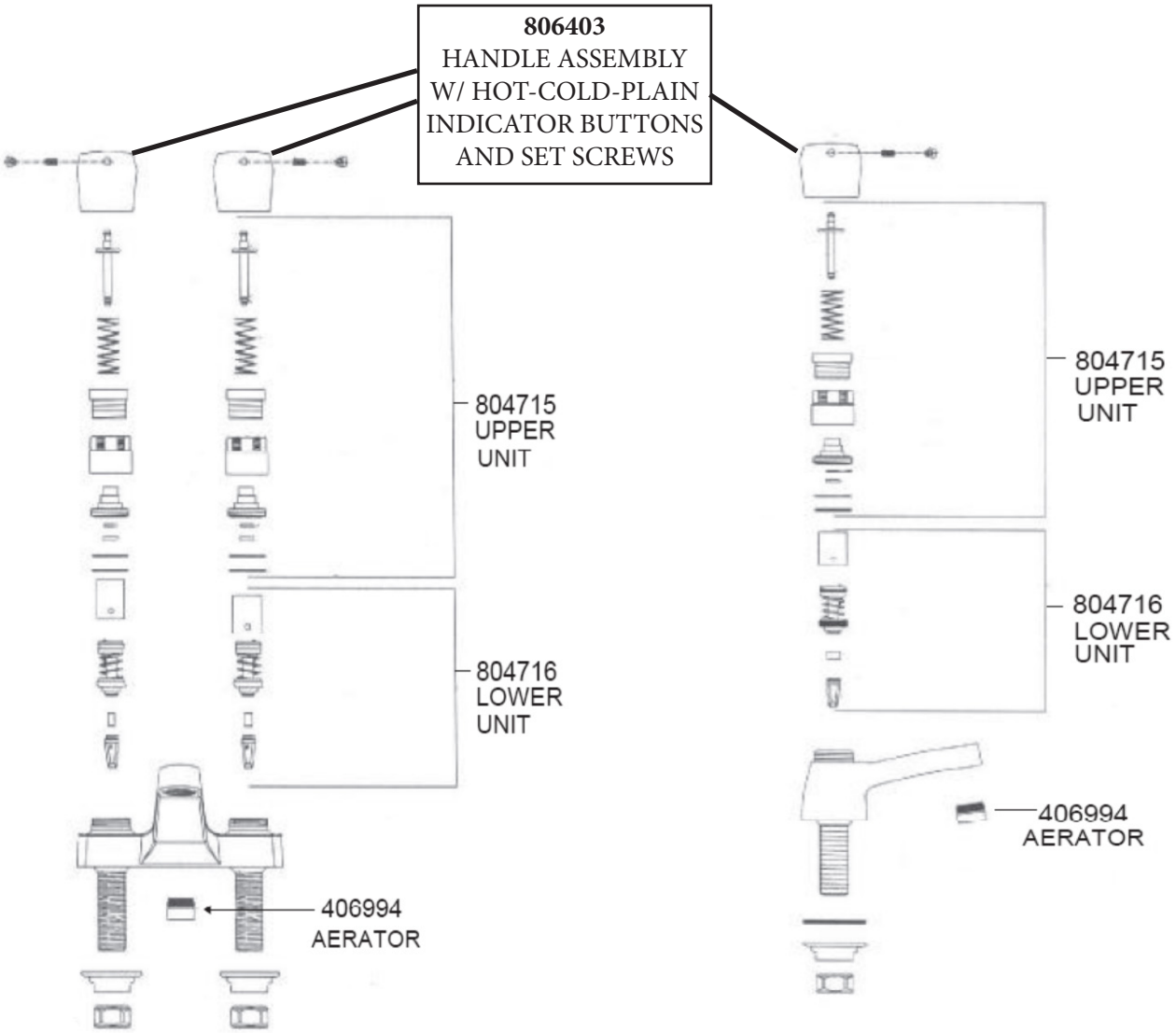

ZURN - 4” CENTERSET LAVATORY FAUCET - 609077

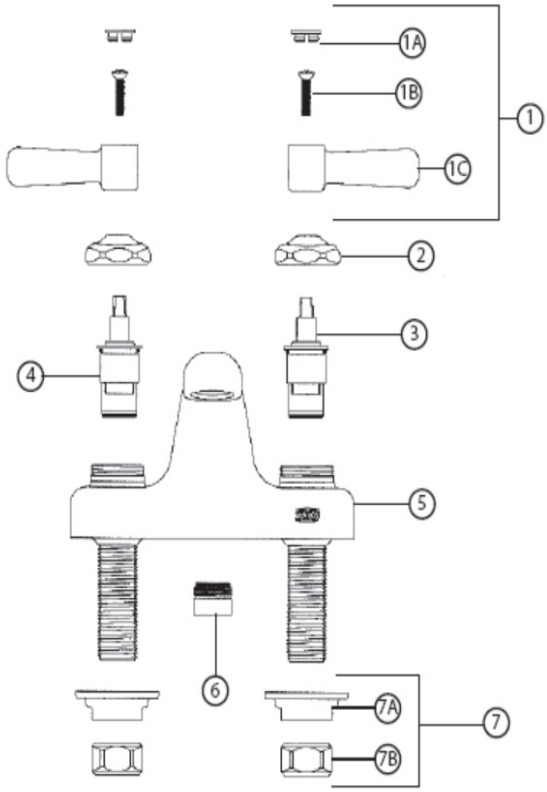

1	**806497**	2-1/2” VANDAL RESISTANT METAL LEVER HANDLES
1A	**G60500**	HOT/COLD COLOR-CODED INDEXES
	59454001	HOT INDEX
	59454002	COLD INDEX
1B	**805757**	10-32 SCREW
1C	**59487001**	LEVER HANDLE
2	**809989**	HANDLE NUT
3	**805975**	SHORT COLD CARTRIDGE
4	**805974**	SHORT HOT CARTRIDGE
5	**92109001**	4” CENTERSET BODY
6	**409173**	13/16”-27 MALE AERATOR - 2.2GPM
7	**807070**	MOUNTING HARDWARE
7A	**400115**	MOUNTING NUT
7B	**401168**	1/2” NPSM RISER NUT

DOUBLE FOOT PEDAL VALVE
ZURN - Z85500

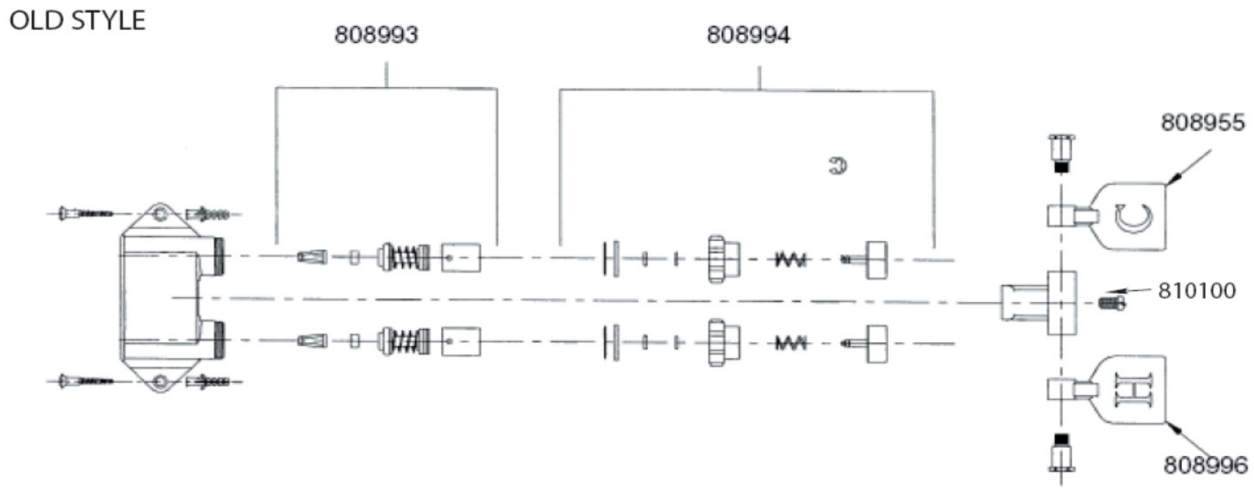

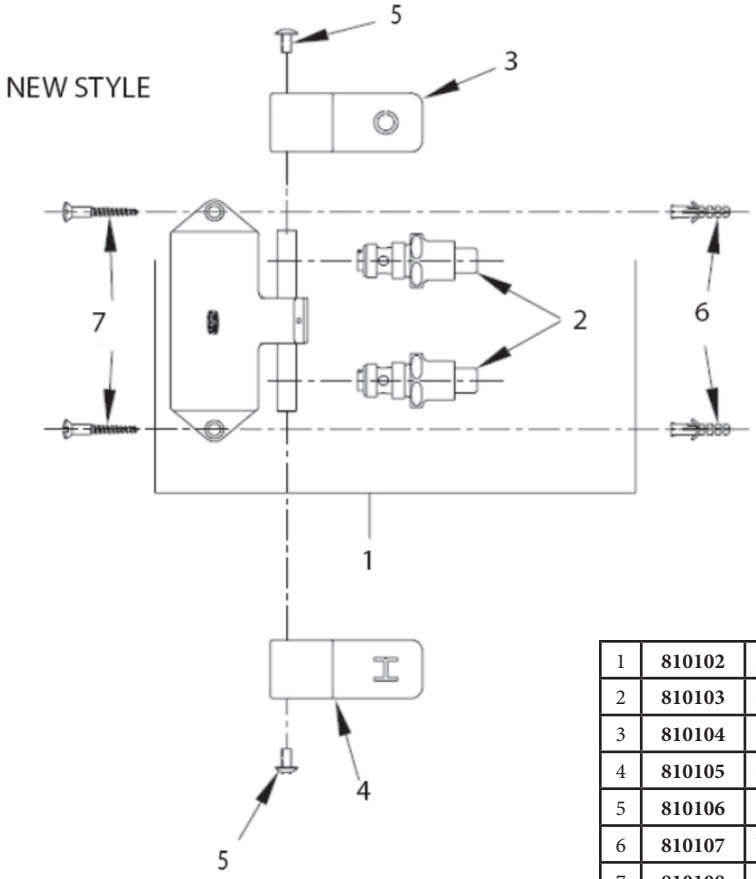

1	**810102**	BODY ASSEMBLY
2	**810103**	SELF-CLOSING VALVE ASSEMBLY
3	**810104**	SHORT COLD FOOT PEDAL
4	**810105**	SHORT HOT PEDAL
5	**810106**	10-32 SCREW
6	**810107**	WALL ANCHOR
7	**810108**	#12 1-1/2" WOOD SCREW

SECTION ELEVEN
HEATING

HOT WATER HEATER ELEMENT

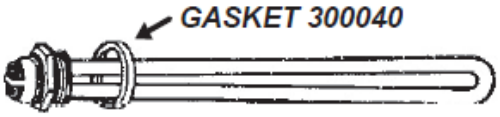

SCREW IN TYPE - STRAIGHT
300015 - 3500 WATTS, 240 V
300001 - 4500 WATTS, 240 V

SCREW IN TYPE - FOLD BACK DOUBLE LOOP- 8 LONG
306001 - 2500 WATTS, 277 V

HOT WATER HEATER ELEMENT

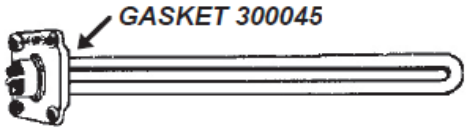

4 BOLTS W/RAISED CORNERS
300010 - 3500 WATTS, 240 V
300005 - 4500 WATTS, 240 V

HOT WATER HEATER ELEMENT

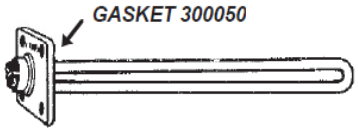

4 BOLTS W/FLAT CORNERS
300021 - 3500 WATTS, 240 V
300033 - 4500 WATTS, 240 V
304051 - 4500 WATTS, 240 V
FOLD BACK DOUBLE LOOP - 13" LONG

HOT WATER HEATER ELEMENT

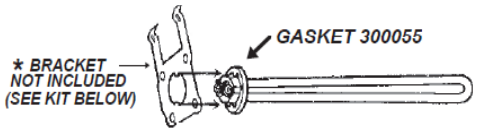

ROUND HEAD
300020 - 3500 WATTS, 240 V

CAMCO/APCOM LOWER THERMOSTAT(SINGLE POLE)

300036-CAMCO/APCOM
300031-KNOX/THERMODISC
300030-ROBERT SHAW-THERMODISC

CAMCO/APCOM UPPER THERMOSTAT(DOUBLE POLE)

300037-CAMCO/APCOM
300035-ROBERT SHAW-THERMODISC

UNIVERSAL ELEMENT ADAPTOR KIT

FOR ELECTRIC WATER HEATER ELEMENT
(ADAPTS FROM LUG-TYPE TO SCREW-IN)

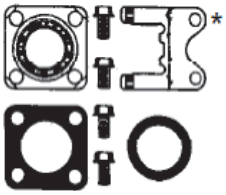

014461

ELEMENT GASKET KIT

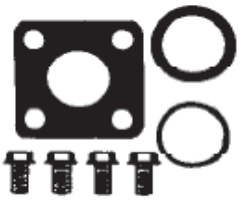

014460

WATER HEATER ELEMENT GASKETS

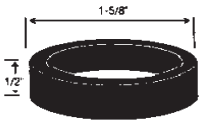

300060

300060 - Same as above except 3/16" height

WATER HEATER ELEMENT GASKETS

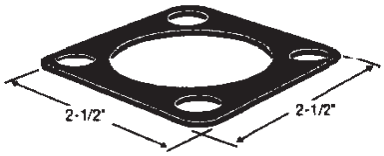

300050

WATER HEATER ELEMENT GASKETS

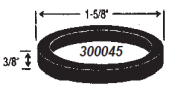

- **300045** - For element in recessed tank flange use w/bolt on elements

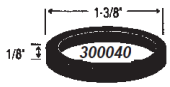

- **300040** - use with screw-in elements

11

TEMPERATURE AND PRESSURE RELIEF VALVES

CONSTRUCTION/SPECIFICATIONS

Type NC Series relief valves features a cast bronze body, brass and stainless steel internal parts, silicone seat disc and a stainless steel pressure spring.

A.G.A, C.G.A., AND A.S.M.E. RATINGS						
TYPE		ACS #	SIZE	ELEMENT EXTENSION LENGTH	A.G.A. RATING (btu/hr.)	A.S.M.E. RATING AT 125 & 150 (btu/hr.)
NCLX-1*	125/210	**002549**	3/4”	3”	95,000	500,000
NCLX-1*	150/210	**002550**	3/4”	1-7/16”	95,000	500,000
NCLX-5*			1/2”	3”	15,000	**
NCLX-5*	125/210	**300146**	3/4”	3”	105,000	500,000
NCLX-5L*	150/210	**002548**	3/4”	2-1/4”	105,000	500,000
NCLX-LS			3/4”	3”	105,000	**
NCLX-8			3/4”	8”	105,000	500,000

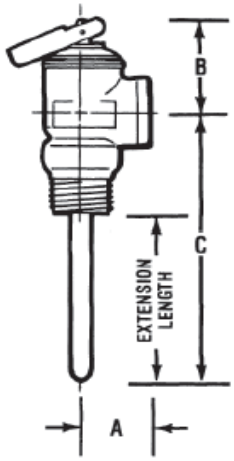

*C.G.A. design certified
** Non_A.S.M.E. rated

PRESSURE ONLY RELIEF VALVE

TYPE F-82

F-82 is a pressure only relief valve designed for use on hot water space heating boilers, water supply heaters and storage tanks. These valves are designed for use on hot water service only and are not to be used on steam.

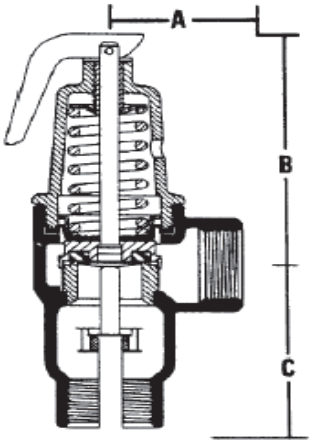

300558 - 3/4” SET @ 30 PSI (717,000 btu/hr)
DIMENSIONS: A= 1-1/2”, B= 3-1/4”, C= 1-3/4”

GAUGES

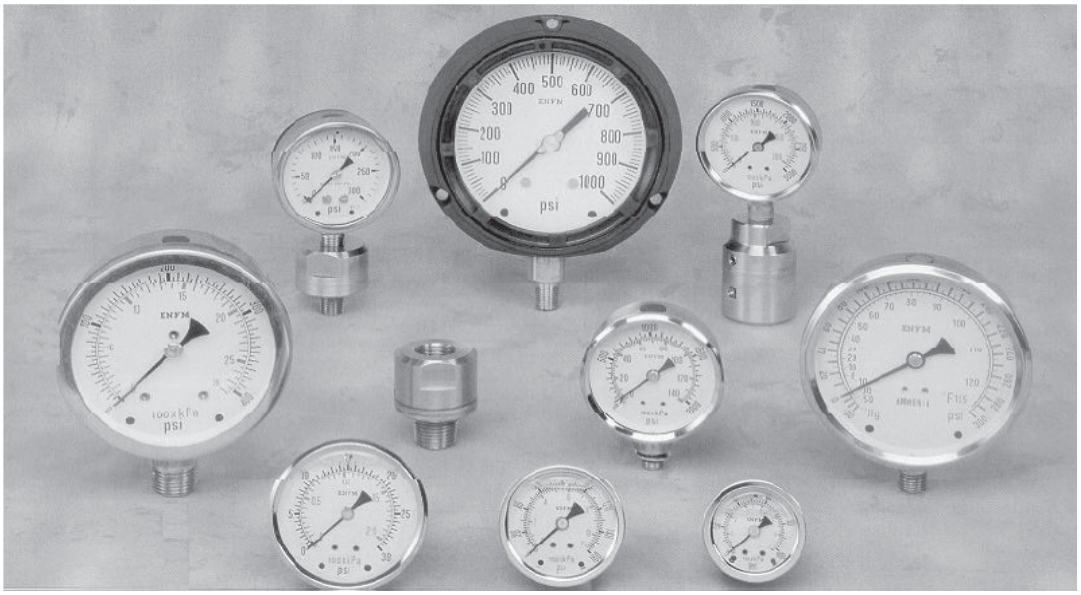

ACS PART #	DESCRIPTION - NOTE: ALL HAVE STAINLESS STEEL HOUSINGS
408803	0-30 VACUUM GAUGE, LIQUID FILLED, 2 1/2 FACE, 1/4 BOTTOM MOUNT
300405	-30/+30 VAC/PRESS. GAUGE, LIQUID FILLED, 2-1/2” FACE, 1/4” BOTTOM MT.
300404	0-30 PRESSURE GAUGE, LIQUID FILLED, 2-1/2” FACE, 1/4” BOTTOM MOUNT
408809	0-60 PRESSURE GAUGE, LIQUID FILLED, 2-1/2” FACE, 1/4” BOTTOM MOUNT
408802	0-100 PRESSURE GAUGE, LIQUID FILLED, 2-1/2” FACE, 1/4” BOTTOM MOUNT
408857	0-160 PRESSURE GAUGE, LIQUID FILLED, 2-1/2” FACE, 1/4” BOTTOM MOUNT
408806	0-300 PRESSURE GAUGE, LIQUID FILLED, 2-1/2” FACE, 1/4” BOTTOM MOUNT
300400	0-60 PRESSURE GAUGE, LIQUID FILLED, 4 FACE, 1/4 BOTTOM MOUNT
300402	0-100 PRESSURE GAUGE, LIQUID FILLED, 4” FACE, 1/4” BOTTOM MOUNT
300401	0-200 PRESSURE GAUGE, LIQUID FILLED, 4” FACE, 1/4” BOTTOM MOUNT
303041	0-300 PRESSURE GAUGE, LIQUID FILLED, 4” FACE, 1/4” BOTTOM MOUNT
300406	0-60 PRESSURE GAUGE, DRY, 4-1/2” FACE, 1/4” BOTTOM MOUNT
300407	0-100 PRESSURE GAUGE, DRY, 4-1/2” FACE, 1/4” BOTTOM MOUNT
300403	0-160 PRESSURE GAUGE, DRY, 4-1/2” FACE, 1/4” BOTTOM MOUNT

THIN WALL LOWPRESSURE
PYREX SIGHT GAUGE GLASS
(RED LINE)

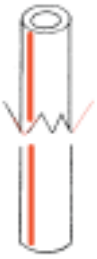

300557 - 5/8" x 12"
000871 - 5/8" x 18"
300062 - 5/8" x 36"
000526 - 3/4" x 12"

THIN WALL HIGH PRESSURE
SIGHT GAUGE GLASS
(RED LINE)

300008 - 3/4" x 12"
300007 - 5/8" x 12"

GAUGE GLASS
FRICTION RING
(BRASS)

300067 - 3/4"
300070 - 5/8"

GAUGE GLASS
GASKET
(RUBBER)

942004 - 3/4"
942000 - 5/8"

STEAM GAUGE SYPHON
(STRAIGHT)

304555

STEAM GAUGE SYPHON
(ANGLED)

304556

GAUGE GLASS
BRASS NUTS

300068 - 3/4"
300069 - 5/8"

GAUGE GLASS CUTTER
(CUTS UP TO 3/4" O.D.)

940828

UNIVERSAL THERMOMETER WELL
(FITS MAJOR MFG.'S THERMOMETERS)

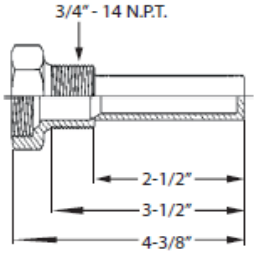

940998 - UNIVERSAL
THERMOMETER WELL

DIGITAL THERMOMETER FOR
CHILL & HOT WATER LINES

944021

PRESSURE GAUGE STAINLESS STEEL
1/4" BOTTOM MOUNT (4-1/2" FACE)

300407

PRESSURE GAUGE-LF
SS CASING 2 1/2 FACE
1/4 BOTTOM MOUNT 0-60PSI

200672

PRESSURE GAUGE 0-160PSI
4 1/2 FACE
1/4 BOTTOM MOUNT.

200671

PRESSURE GAUGE
1/4 BOTTOM MOUNT
0 -100 PSI

940836

11

1/2” X 5/8” KEYWAY
P4Z-429
118709 - 4J

ACS-300566

5/8” KEYWAY X 1/2” YOKE
P77237
186410 - 4J

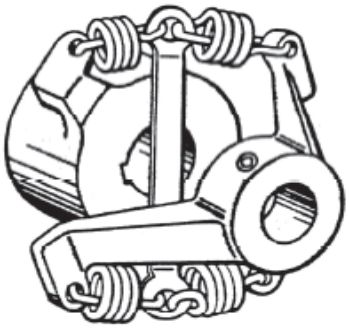

ACS-300071

5/8” KEYWAY X 5/8” KEYWAY
PS2Z-12291
118476 - 4J

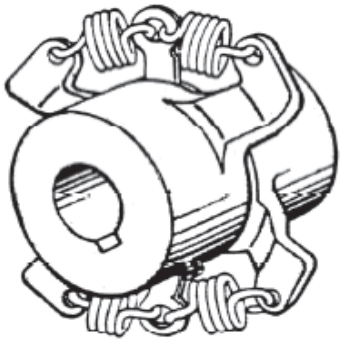

ACS-300072

STAMPED STEEL
189110
SERIES 100
ACS-300565
SAME IN CAST
ACS-300073

CAST
1/2” X 1/2”
1/4-1/3 HP MOTORS
P2Z-12291
118723
ACS 300570

CAST
PZ-4291
SERIES 100
118705
1/12-1/6 HP
06026-01
RM876
ACS 3J
ACS-300073

1/2” X 1/2” YOKE
PDZ-1229
118473 - RM798 - 3J

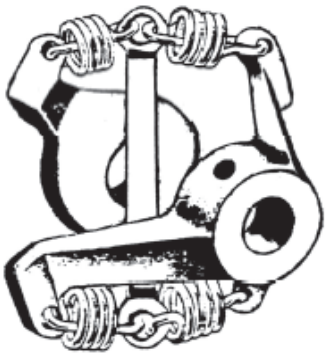

ACS-300567

BELL & GOSSETT PUMPS

MODEL NO.	FLANGE SIZE NPT INCHES (Specify Size)	DIMENSIONS IN INCHES (drip-proof) (MM)				APPROX. SHPG. WT. LBS. (Kg)	
		A	B	C	D	Iron Body	Bronze Body
Series 100	3/4	14-7/8 (378)	6-3/8 (162)	12-3/4 (324)	9/16 (14)	20 (9)	21 (10)
	1,1-1/4				3/4 (19)		
	1-1/2				15/16 (24)		
Series HV	1	15-3/8 (391)	8-1/8 (216)	13 (330)"	5/8 (16)	28 (13)	30 (14)
	1-1/4, 1-1/2				3/4 (19)		

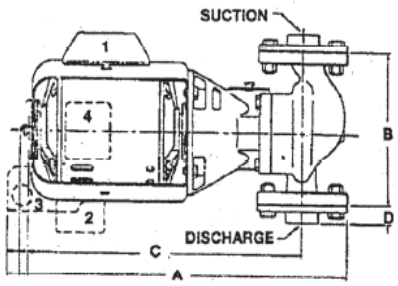

SERIES 100 TYPE CIRCULATOR PUMP IRON or BRONZE

*3 Piece type design features replaceable parts
*1/12 HP motor, 1750 RPM, 115 V, 60 HZ
*For use on 3/4" through 1-1/2" pipes
*Flange gaskets included

301557 - B&G #100NF1, ARMSTRONG #S25 (IRON)
008846 - B&G #100BNF1, ARMSTRONG #S25 (BRONZE)

HIGH VELOCITY CIRCULATOR PUMP IRON BODY

*1/6 HP motor, 1750 RPM, 115 V, 60 HZ
*For use on 1" through 1-1/2" pipes
*Flange gaskets included
*Higher flow and head
*Quiet, efficient operation

306998 - B&G #HVHFI, ARMSTRONG #H32 (IRON)

FLANGES FOR CIRCULATING PUMPS

*Universal type flange for Bell & Gosset, Armstrong pumps
*Steel or Cast Bronze
*3-5/32" or 3-7/16" centers

*Fits B&G 100 NRF22, NBF12, and 100 Series/ Armstrong Astro 30 and S-25
Steel 3-5/32" Centers
307400 - 3/4"
307401 - 1"
307402 - 1-1/4"
307403 - 1-1/2"
Cast Brass 3-5/32" Centers
307404 - 3/4"
307405 - 1"
307406 - 1-1/4"
307407 - 1-1/2"
*Fits B&G HVHFI/ Armstrong H32
Steel 3-7/16" Centers
307408 - 1"
307409 - 1-1/4"
307410 - 1-1/2"

SEAL BEARING ASSEMBLY - BRONZE FITTED

*Features bronze face plate, nut and washer, seal kit included
*Fits bronze or iron body pumps for Bell & Gossett or Armstrong

300447 - Fits B&G #118844/Armstrong #816019-02

SEAL KIT

*Fits many Bell & Gossett or Armstrong Circulating Pumps

300117 - Fits B&G #118681 /Armstrong #816706-001

1/12 HP CIRCULATOR PUMP MOTOR

*Replacement motor for most popular Bell & Gossett 100 Series and Armstrong S-25 Series pumps
*1 AMP, 115 V, 60 HZ
*Thermally protected

301226

WET ROTOR CIRCULATING PUMPS

3 Year Warranty

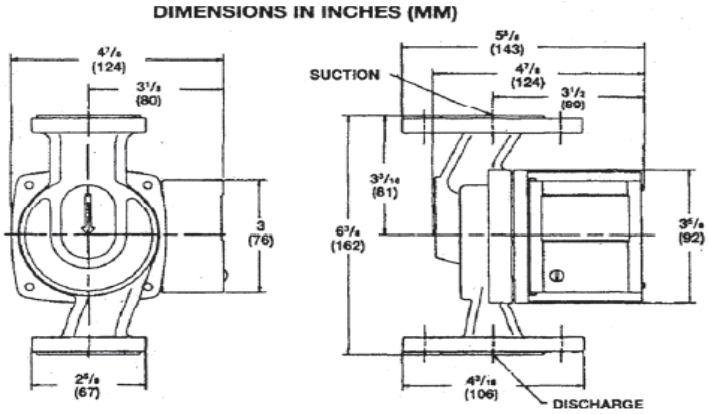

*Single speed *For use on 3/4" through 1-1/2" pipes
*Polypropylene impeller *Flange gaskets included
*1/25 HP motor *For heating and cooling application
*Up to 80% more starting torque than competing circulators

306940 - IRON
307890 - BRONZE (LOW HEAD)
008801 - BRONZE (MEDIUM HEAD)

TACO CIRCULATOR PUMP

The Taco 007 is a cartridge style, maintenance free, wet-rotor, in-line, single stage circulator pump.
It is designed for quiet operation in Hydronic heating, Radiant heating, Hydro-Air fan coils, Indirect water heaters, Chilled fresh water, and Domestic Water Recirculation systems.

Available in Cast Iron or Bronze construction with universal flanged connections. The unique replaceable cartridge contains all of the moving parts and allows the circulator to be easily serviced instead of replacing the entire unit.
Ideal for a wide range of applications.

306626 - BRONZE
302203 - CAST IRON
302204 - 3/4" BRONZE FLANGE KIT

GENERAL PUMP PARTS IDENTIFICATION AND ORDERING INFORMATION

BOOSTER PUMP
EXPLODED VIEW

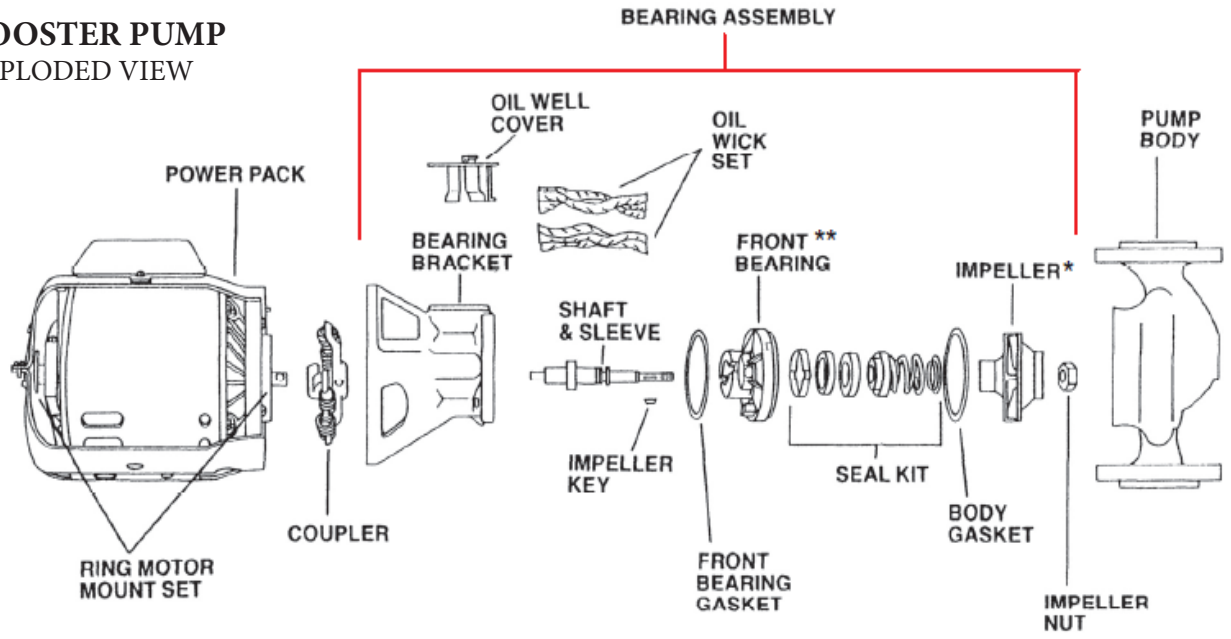

PUMP OIL-701550
12/CASE, 4 OZ./TUBE

NOTE: PUMP SHOWN IS SERIES 100.

REPLACEMENT PARTS FOR ALL BOOSTERS ARE SIMILAIR.
*IMPELLER NOT ALWAYS INCLUDED IN BEARING ASSEMBLY
**SHOWN ROTATED 90 DEGREES

GENERAL PUMP INFORMATION FOR ORDERING ARMSTRONG, AURORA, B&G, GOULDS, PEERLESS,TEEL AND TACO PUMPS/COMPONENTS & PARTS

BASIC PUMP COMPONENTS ARE:

1. POWER PACK/MOTOR
2. BEARING ASSEMBLY
3. PUMP BODY/VOLUTE

WHEN ORDERING ANY OF THE ABOVE THREE ITEMS OR COMPLETE PUMP UNITS PLEASE USE THE FOLLOWING INFORMATION:

A. COMPLETE TAG INFORMATION FROM THE POWER PACK/MOTOR, BEARING ASSEMBLY & PUMP BODY/VOLUTE.

B. CASTING NUMBER. SOME PUMP BODIES DO NOT HAVE TAGS, IN WHICH CASE YOU CAN FURNISH A CASTING NUMBER FROM THE PUMP BODY AND THE PIPE SIZE THE PUMP IS CONNECTED TO.

C. TYPE OF FLANGES. IT IS ALSO HELPFUL TO FURNISH THE TYPE OF FLANGES ON THE PUMP BODY (ROUND, SQUARE OR DIAMOND), ALONG WITH THE NUMBER OF BOLTS PER FLANGE.

SUPERIOR FLEXIBILITY - Extends Pump Life By Absorbing Torque Load On Bearings And Seals

SINGLE RETROFIT - Eliminates Future Coupling Replacement

EASY INSTALLATION - Reduces Labor Hours and Down-time

3-MODEL VERSATILITY - Reduces Coupler Inventory Up To 70%

CROSS REFERENCE, OEM COUPLER TO Spiralink™

ACS-300002

ACS-300003

ACS-300004

Circulator Make/Model		Flange	Motor (1 HP Max.)		Shaft	OEM Coupling		ACS #
B & G	Armstrong		HP	Rot.		B & G	Armstrong	
75	S-25	3/4	1/12	CCW	1/2 x 1/2	118705 or 189110	806026-001	300002
100		1						
125		1-1/4						
150		1-1/2						
1-1/2”	S-34	1-1/2	1/6					
2”	S-35	2						
2-1/2”	S-45	2-1/2	1/4			116723	806168-001	
LD3		3						
HD3	S-46	3	1/3					
HV1”		1	1/6			118705 or 189110	806026-001	
HV1-1/4”	H-32	1-1/4						
HV1-1/2”		1-1/4						
1”PR	H-41	1						
PD-35	S-55	3	1/2	CW	1/2 x 1/2 or 1/2 x 5/8	118473 or 118709	807436-000 or 806137-000	300003
PD-37	S-57		3/4					
PD-38	S-69		1		1/2 x 5/8*	P77271	812734-000	300004
PD-39					5/8 x 5/8		816665-000	
OLD	NEW				requires bushing supplied w/ model 10023			
60-1	60-11	H-51	1	1/4	1/2 x 1/2 B&G	118473 or P77234	807436-000	300003
60-2	-	H-52	1-1/4	1/3				
60-3	60-13	H-53	1-1/4	1/2	1/2 x 5/8 arm		806137-000	
60-4	60-14	H-54	2	3/4				
60-5	60-15	H-53	1-1/2	1/2	1/2 x 5/8	186410 or P77237	812734-000	
60-6	60-16	H-54		3/4				
60-8	-	H-55	2					
-	60-17	H-5	1-1/4	1	5/8 x 5/8	P77271	816665-000	300004
-	60-19	H-57	2					

	H.P.	Rot.	Shaft	Spiralink*	Important:
Summary Table:	1/12,1/6, 1/4,1/3	CCW	1/2 x 1/2	10010	Install Model 10010 only n standard, counter-clockwise roatation circulators with normal shaft spacing. (View rotation from rear motor mount position.) If rotation is reverse or if spring mus be stretched to fit shaft spacing, substitute Spiralink* Model 10023.
	1/4,1/3 1/2,3/4	CW	1/2 x 1/2 DY 1/2 x 5/8	10023	
	1	CW	1-9/16”	10034	

SPIRALINK

The Solution For Pump and Bearing Shafts That Are Not Straight In Line

SUPER FLEXIBILITY

SPIRALINK'S specially tempered coil spring compensates for shaft misalignment, and also absorbs starting torque to reduce load on bearings and seals, promoting longer pump life.

EASY INSTALLATION

SPIRALINK'S simple configuration facilitates quick installation. Mounted to the motor shaft, it slips readily onto the pump side for seating on the shaft flat.

SILENT RELABILITY

SPIRALINK'S one-piece precision design yields fricionless operation. with no wear surfaces in contact, chattering (the sure sign of approaching failure) is eliminated.

WARRANTY

SPIRALINK couplers are guaranteed to be free from defects in material and workmanship under conditions of normal use. If not satisfied with the product, the user may obtain a replacement or refund by returning it to the source with proof of purchase.

TACO MODEL	HP	Rot.	SHAFT	OEM PART #	SPIRALINK
121	1/4	CCW	1/2 x 1/2 or 1/2 x 5/8 or 5/8 x 5/8	1624-053RP 3J 4J	**300006**
122	1/4	CCW			
131	1/3	CCW			
132	1/2	CCW			
133	3/4	CCW			
138	1	CCW			

SURE-FLEX SLEEVE

Modeled rubber and one-piece solid construction

These sleeves may be used in any Sure-Flex flange within a given size

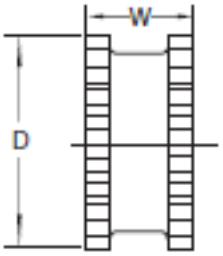

Part No.	Coupling Size	D	W	Wt. (lbs.)
300090	3"	1-7/8"	1"	.06
300411	4"	2-5/16"	1-1/4"	.10
300400	5"	2-5/16"	1-9/16"	.20
300401	6"	3-3/4"	1-7/8"	.40
300402	7"	4-11/32"	2-3/16"	.62

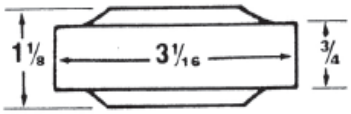

118665 - Steel
118434 - Bronze
Used on 1-1/4" & 1-1/2" Boosters through 1949 (1" Booster 1950 and after)

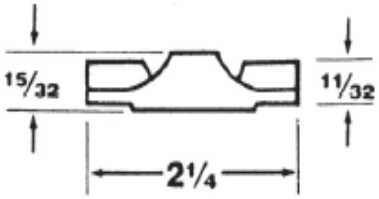

P15627 - Non-Ferrous
Used on LR-20, LR-20B, & LR-15B

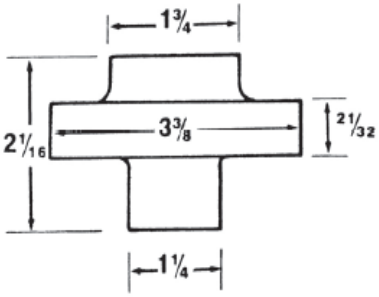

403719 - Non-Ferrous
Used on HV & 2" NFI & BNFI Boosters since Jan. 1976

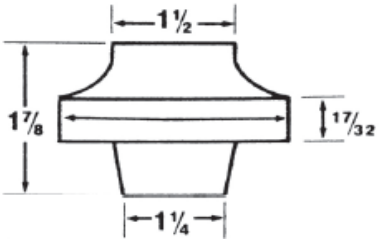

189132 - Non-Ferrous (2 Pieces) Used on Series 100 NFI, BNFI, IB Boosters and SC-75 Boosters

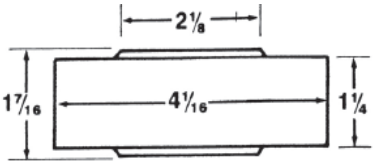

118438 - Bronze
118674 - Steel
Used on 3" HHD Boosters through 1949

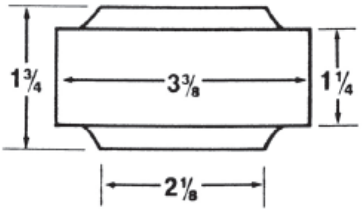

118437 - Bronze
118669 - Steel
Used on 2-1/2" & 3" HLD Boosters through 1949

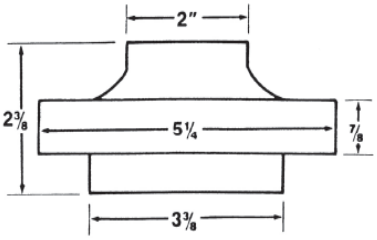

118626 - Bronze
118629 - Steel
Used on PD37 Boosters

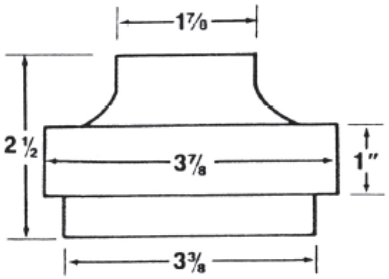

118676 - Bronze
118440 - Steel
Used on 2-1/2" & 3" LD Boosters through 1950

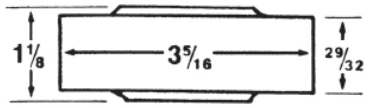

118666 - Steel
Used on 2" & HV Boosters through 1949 (1-1/4" & 1-1/2" 1951 to Sept. 1976)

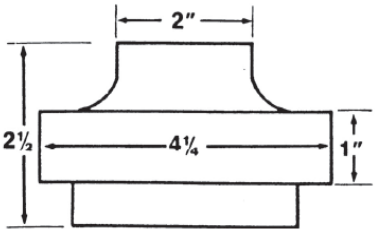

118675 - Steel
118439 - Bronze
Used on 3" HV Boosters Since 1950

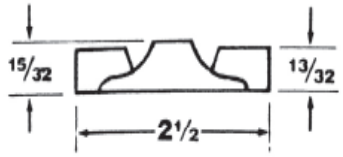

P15629 - Non-Ferrous
Used on LR-12 & LR12B

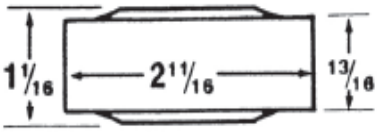

118433 - Bronze
Used on 1" Boosters through 1949

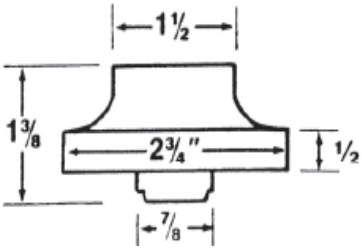

118431 - Bronze
Used on BF & AB Series 100 Boosters

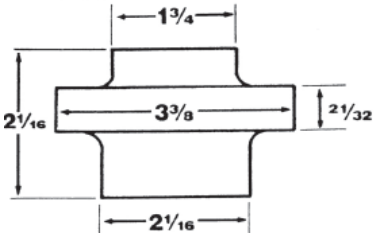

P07792 - Bronze
Can be used on 2" & HV Boosters since Jan. 1976

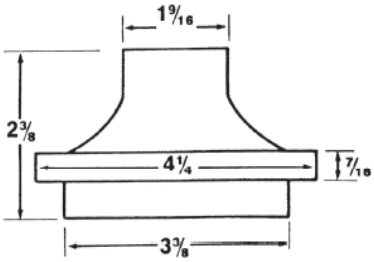

118612 - Bronze
118830 - Steel
Used on PR Boosters

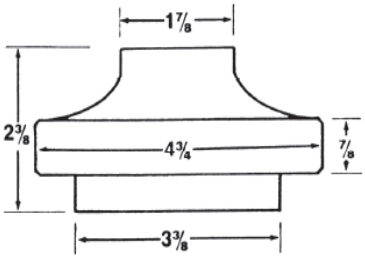

118627 - Bronze
118630 - Steel
Used on PD 35 Boosters

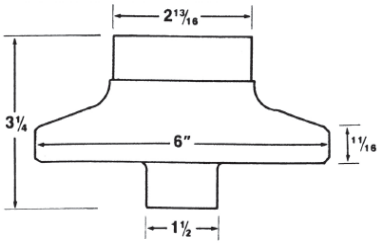

118452 - Cast Iron
118453 - Cast Bronze
Used on PD39 & PD40 Boosters

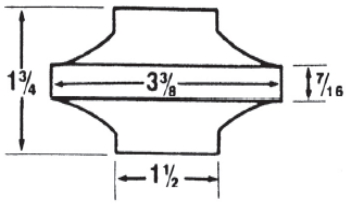

118436 - Bronze
1951 to Dec. 1976
Used on 1-1/4" & 1-1/2" (w/Brass Body Only) and 2" and HV
118668 - Steel
Used on 2" & HV 1951 to 1976

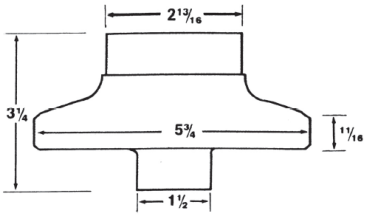

PO8709 - Steel
PO8689 - Bronze
Used on PD 38 Boosters

SECTION TWELVE
BUBBLERS, HYDRANTS, & RELATED REPAIR PARTS

DRINKING FOUNTAIN BUBBLER HEAD

804531
802066- PVC

SELF CLOSING DRINKING FOUNTAIN 1/2" FPT LEAD FREE

807718

CENTRAL BRASS SELF-CLOSING DRINKING FAUCET W/ LEVER HANDLE CP BRASS 1/2" NPSM SHANK

600153 - COMPLETE UNIT

REMOTE PUSH BUTTON VALVE CP BRASS BUTTON W/ LEAD FREE CARTRIDGE 1/4" FPT

803020

PUSH BUTTON DRINKING FOUNTAIN RETRO-FIT KIT

804885

BUBBLER FAUCET W/ REPLACEABLE CARTRIDGE CP BRASS 3/8" IPS INLET

801365

DRAIN TRAP FOR WATER FOUNTAIN BY ELKAY (FITS MOST BRANDS)

801640

UNIVERSAL BUBBLER CARTRIDGE LEAD FREE

801370

BUBBLER CONVERSION KIT

BUBBLER CONVERSION KIT INCLUDES STOP VALVE AND SUPPLY LINE. FOR AMERICAN STANDARD, KOHLER AND HALSEY TAYLOR.

803669

200023 - FOUNTAIN BUSHING & VALVE WRENCH 2-IN-1 TOOL

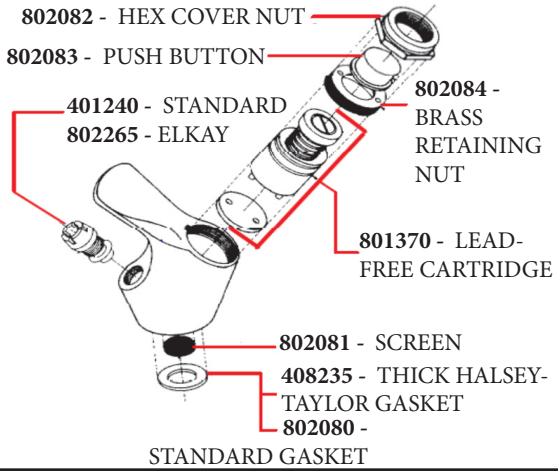

EBCO MODEL 12000 VALVE - HAND OPERATED

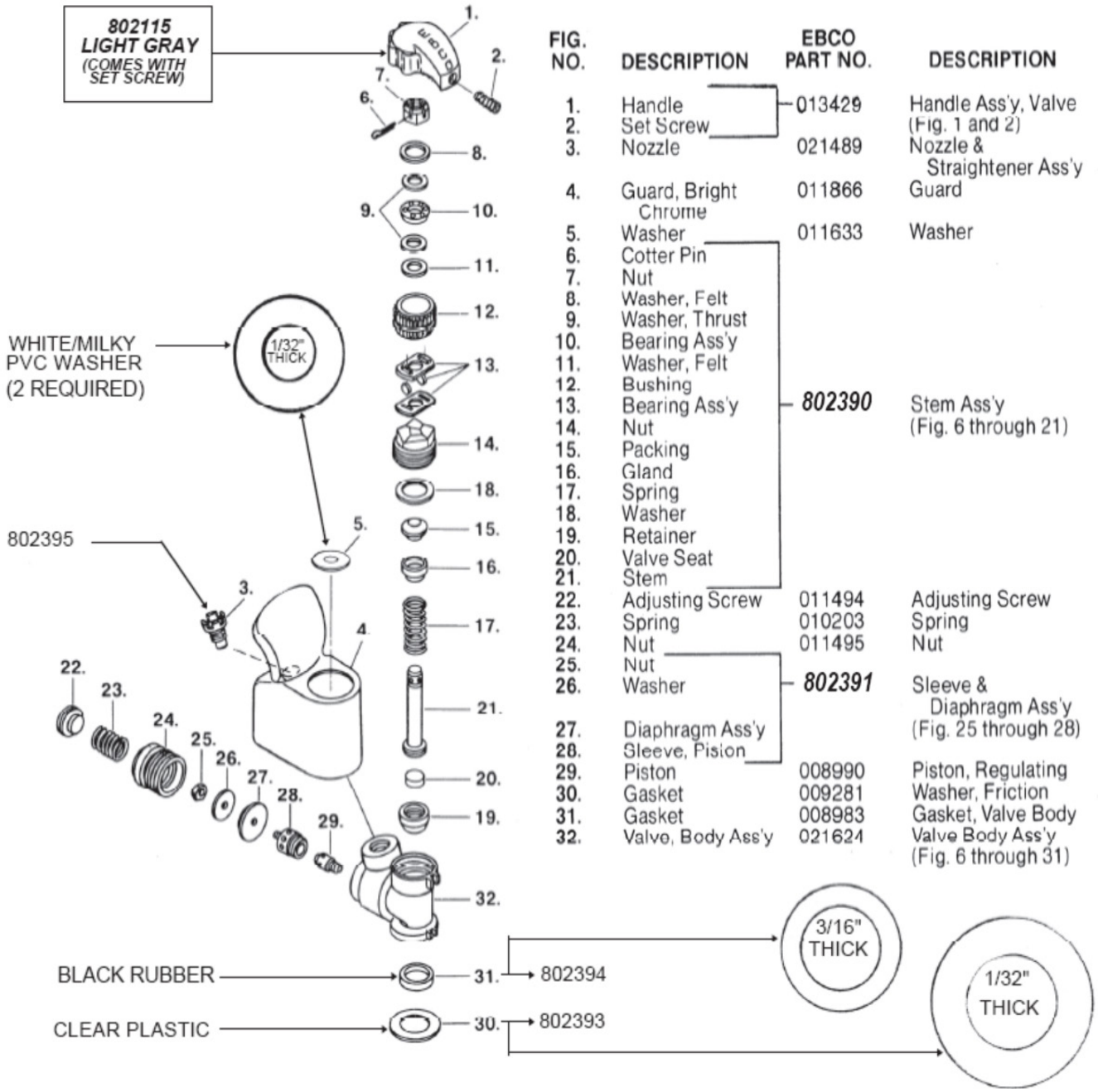

FIG. NO.	DESCRIPTION	EBCO PART NO.	DESCRIPTION
1.	Handle	013429	Handle Ass'y, Valve (Fig. 1 and 2)
2.	Set Screw		
3.	Nozzle	021489	Nozzle & Straightener Ass'y
4.	Guard, Bright Chrome	011866	Guard
5.	Washer	011633	Washer
6.	Cotter Pin		
7.	Nut		
8.	Washer, Felt		
9.	Washer, Thrust		
10.	Bearing Ass'y		
11.	Washer, Felt		
12.	Bushing		
13.	Bearing Ass'y	802390	Stem Ass'y (Fig. 6 through 21)
14.	Nut		
15.	Packing		
16.	Gland		
17.	Spring		
18.	Washer		
19.	Retainer		
20.	Valve Seat		
21.	Stem		
22.	Adjusting Screw	011494	Adjusting Screw
23.	Spring	010203	Spring
24.	Nut	011495	Nut
25.	Nut		
26.	Washer	802391	Sleeve & Diaphragm Ass'y (Fig. 25 through 28)
27.	Diaphragm Ass'y		
28.	Sleeve, Pision		
29.	Piston	008990	Piston, Regulating
30.	Gasket	009281	Washer, Friction
31.	Gasket	008983	Gasket, Valve Body
32.	Valve, Body Ass'y	021624	Valve Body Ass'y (Fig. 6 through 31)

Instructions To Order:

1. Find the part required to repair your valve-use the part number following the description to order-do not use figure number.
2. Parts that are bracketed are sold as assemblies only.

Maintenance Instructions:

1. To remove bubbler guard, 011866, -loosen set screw in handle and remove handle. Use screw driver to remove nozzle assembly, 021489. The bubbler guard may now be removed.
2. Stream regulation-with the bubbler guard removed-replace the nozzle ass'y in the valve body. Turn the adjusting screw (Fig. 22) clockwise to raise stream or counter-clockswise to lower stream.
3. After adjustment is completed, remove nozzle ass'y, replace bubbler guard, replace nozzle ass'y, install handle ass'y. Note: A clearance of 1/32" should be allowed between the bubbler guard and the handle on the side nearest bubbler outlet. Tighten set crew only enough to prevent handle from lifting off-overtightening may cause handle to crack.

The parts listed are available from most Ebco distributors, approved service centers or the factor.

WATER COOLER ACCESSORIES

802398

802397
802706

802396
800008

SOLENOID VALVE ASSEMBLY (LEFT-HAND BRACKET)

809090

SOLENOID VALVE ASSEMBLY (REAR BRACKET)

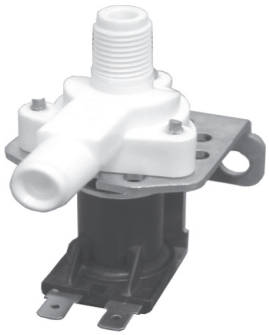

800007

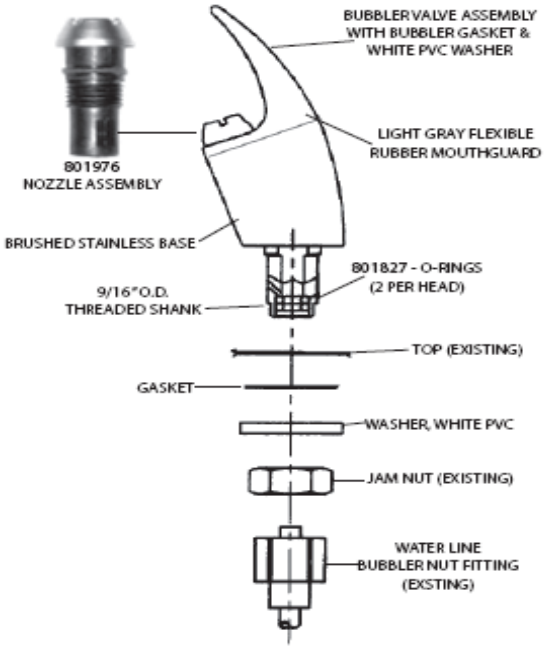

807030- PVC STAINLESS STEEL COLORED HEAD WITH GRAY PLASTIC FLEXIBLE MOUTH GUARD.

12

BUBBLER REPLACEMENT PARTS

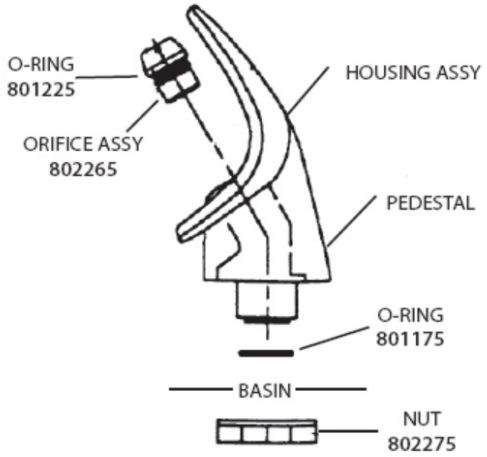

802280- COMPLETE ASSEMBLY WITH 5" COPPER CONNECTOR LINE

REPAIR PARTS FOR DRINKING FOUNTAIN PUSH BUTTON

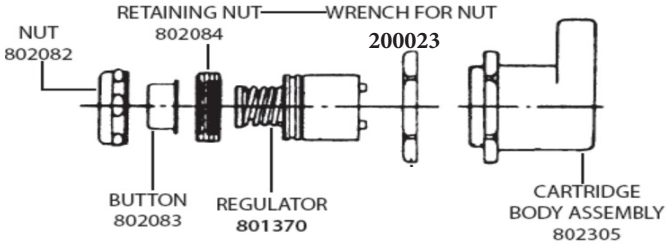

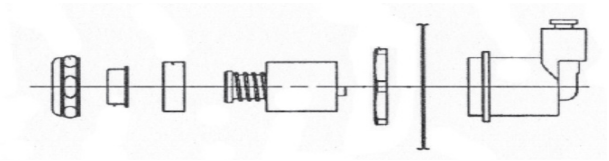

498536- PUSH BUTTON & REGULATOR ASSEMBLY

1/4" PUSH FIT STREET ELBOW

000149

WATER FOUNTAIN IN-LINE STRAINER

802208
1/4" COMP X 3/8" COMP X 3-5/8" LONG

200023 - 2-IN-1 FOUNTAIN BUSHING/ VALVE WRENCH

BUSHING REMOVAL

807739 - HAWS PUSH BUTTON CARTRIDGE

ELKAY

MODELS EZF(S)TL8_1, EZF(S)TLF8_1, EZF(S)TLVR8_1, LZF(S)TL8_1, EZF(S)TL8_2JO

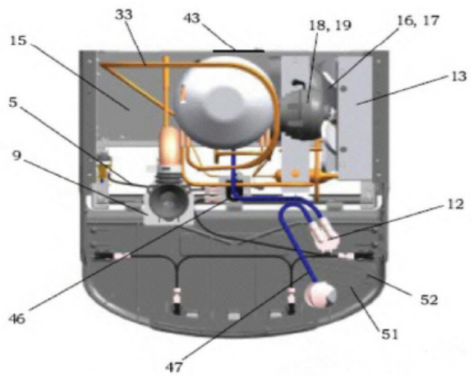

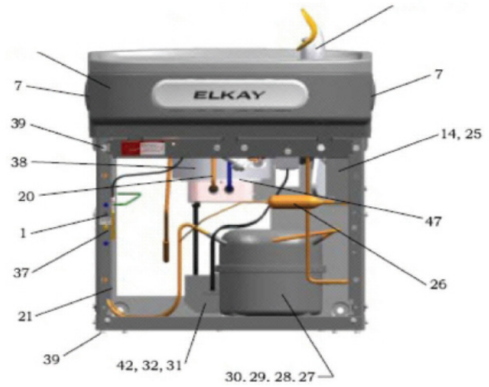

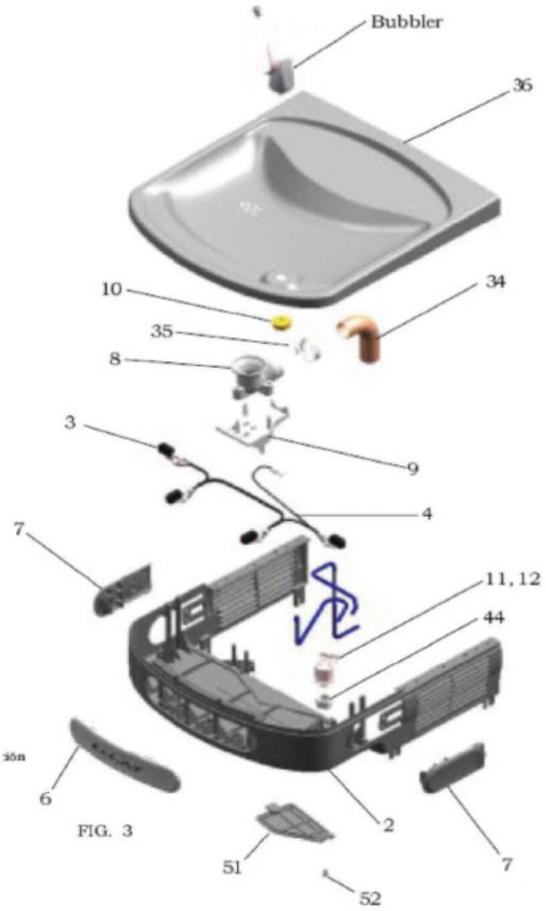

FIG. 3

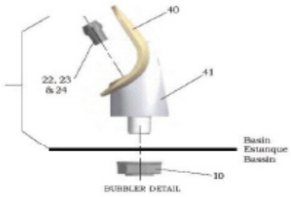

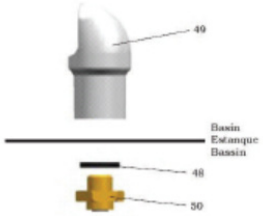

ITEM NO	PART NO	DISCRIPTION
1	111411443890	SCREW #8-36 TRI-LOBED
2	56229C	ASSY-SHROUD-UPPER (FRONT SIDE PUSH)
	56230C	ASSY-SHROUD-UPPER (FRONT PUSH)
3	35948C	SWITCH - ELECTRICAL
4	36216C	WIRING HARNESS (FRONT SIDE PUSH)
	36217C	WIRING HARNESS (FRONT PUSH)
5	36161C	WIRE - JUMPER (WHITE)
	36162C	WIRE - JUMPER (BLACK)
6	55999C	PUSHBAR - FRONT
7	560002C	PUSHBAR - SIDE
	56074C	PUSHBAR - FILLER SIDE
8	56118C	DRAIN FITTING
9	56182C	ADAPTER - DRAIN
10	75580C	NUT LOCK 3/8 x 18
11	008022	REGULATOR
12	402202	HOLDER - REGULATOR
13	27846C	SHROUD - FAN TOP
14	27847C	SHROUD - FAN BOTTOM
15	36159C	POWER CORD EZTL
	36160C	POWER CORD EZTLR
	35980C	POWER CORD L/R
16		FAN BLADE
17		HEX NUT - FAN BLADE
18		FAN MOTOR
19	70009C	SCREW - FAN MOTOR
20	66724C	TUBE - EVAP TO BASE
21	27416C	WRAPPER - STAINLESS
	27413C	WRAPPER - LIGHT GREY
	27872C	WRAPPERS - STAINLESS W/O LOUVERS
	27874C	WRAPPER - LIGHT GREY W/O LOUVERS
	28361C	WRAPPER - MIRROR FINISH
22	40319C	FITTING ORIFICE
23	50171C	O-RING
24	50314C	ORIFICE FLOW STRAIGHTNER
25	62152C	CONDENSER (4GPH)
	66655C	CONDENSER (8GPH)
26	66703C	DRIER
27	101516143550	STUD COMPRESSER MTG
28	100806740570	GROMMET - COMPRESSOR MTG
29	19037000	CLIP COMPRESSOR MYG
30	36094C	COMPRESSOR SERV PAK EM170HNR
31	35959C	RELAY
32	35768C	COVER - RELAY
33	66576C	HEAT EXCHANGER
34	66721C	DRAIN TUBE
35	70444C	CLAMP DRAIN FITTING
36	55001109	BASIN STAINLESS STEEL
37		COLD CONTROL
38	66533C	EVAPORATOR ASSEMBLY (4GPH)
	66534C	EVAPORATOR ASSEMBLY (8GPH)
39		SCREW #10 - 1/2"LG. HHSM
40	56011C	HOUSING ASSEMBLY
41	55997C	PEDESTAL
42	36158C	OVERLOAD
43	28401C	HANGER BASKET
44	56082C	NUT - REGULATOR
45	56073C	BUBBLER ASSEMBLY
46		VALVE - SOLENOID
47	56092C	POLYTUBING (CUT TO LENGTH)
48	100322740560	GASKET - .68 x 1.03(VR)
49	45392C	BODY BUBBLER(VO)
50	15009C	NIPPLE - BUBBLER (VR)
51	56213C	ACCESS PANEL
52	75532C	SCREW #10 - 16 x .63 THSM
NS	75635C	SCREW #10 - .16 x .75 PTHD

WASTE ASSEMBLY 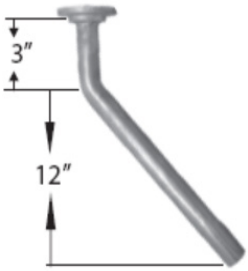 **804519**	SOLENOID VALVE 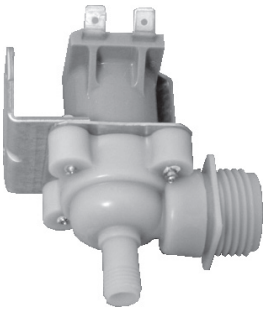 **806652**	BEVELED WASTE GASKET **804518**	Y-STRAINER **003569**
FLOW CONTROL UNIT **808812**	WATER CONTROL ASSEMBLY **804678**	PUSH RIVET BODY **806978**	HOT HANDLE FOR DISPENSER **801082**
REGULATOR CARTRIDGE STANDARD **005252** - STANDARD **801049** - ALL BRASS	REGULATOR HANDICAPPED **008022**	REGULATOR BODY W/ COPPER LINES 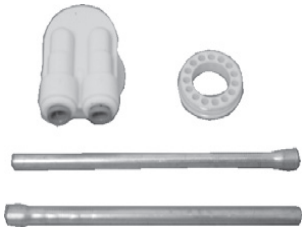 **802305**	CONTROL FOR WATER COOLER **804205**
PRESSURE BALANCING CARTRIDGE 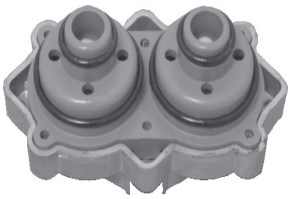 **804450**	ORIFICE/NOZZLE ASSEMBLY **802265**		

OASIS

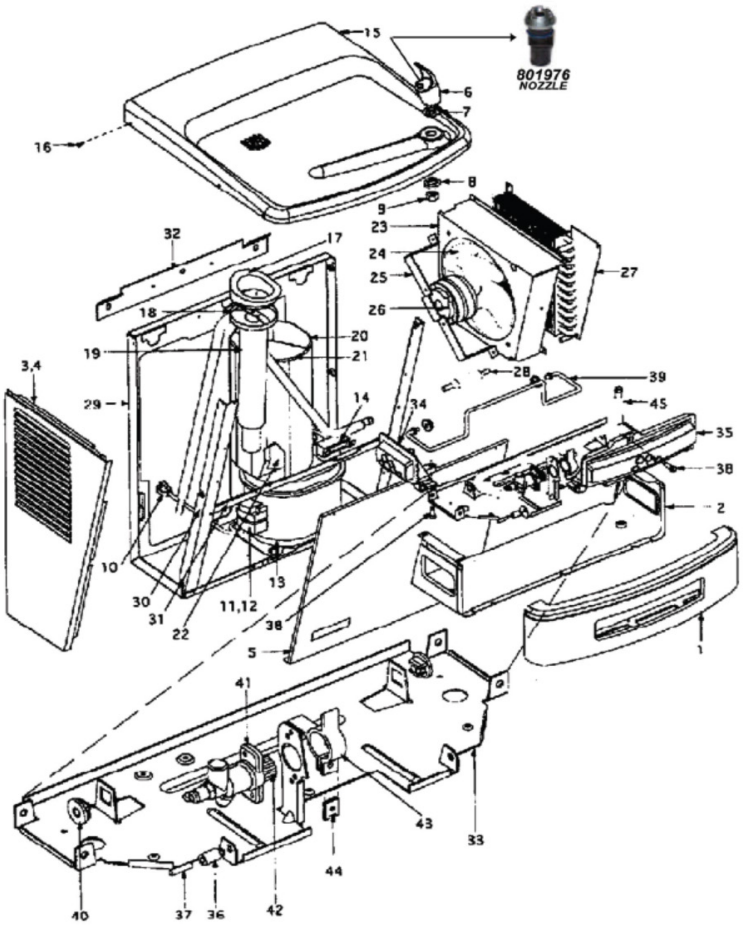

		P8AM/PAM
1	Front Nose, Sandstone	807330
	Front Nose, Greystone	031754-005
	Front Nose, Stainless	031754-007
	Front Nose, Painted (Tan)	807330
2	Housing, Middle Sandstone	031753-002
	Housing, Middle Greystone	031753-001
	Housing, Middle Stainless	031753-003
	Housing, Middle Painted (Tan)	031753-005
3	Panel, Side Left Sandsone	031751-002
	Panel, Side Left Greystone	806631
	Panel, Side Left Stainless	031751-003
	Panel, Side Left Painted (Tan)	031751-005
4	Panel, Side Right Sandsone	031750-002
	Panel, Side Right Greystone	031750-001
	Panel, Side Right Stainless	031750-003
	Panel, Side Right Painted Tan)	031750-005
5	Panel, Front Sandstone	031752-002
	Panel, Front Greystone	031752-001
	Panel, Front Stainless	031752-003
	Panel, Front Painted (Tan)	031752-005
6	Buzzer Valve	
	Nozzle Assembly	806757
7	Gasket	801980
8	Washer, Undertap	801981
9	Nut	802078
10	Cord Assy, Power Supply	025540-040
11	Overload, MAP26ALL-60	031698-001
12	Relay, 9660-043-166	032124-001
13	Compressor Assembly	803529
14	Control, Cold	031714-001
15	Top	808967
16	Screw, Torx HD	002154
17	Gasket, Waste	

		P8AM/PAM
18	Waste Assy., Insulated	032126-001
19	Insulation, Waste Assy.	031497-006
20	Insulation, Cooling Tank R/H	031898-001/**N/A for PAM**
21	Insulation, Cooling Tank L/H	031899-001/**N/A for PAM**
22	Cooling Tank Assy., Insulated	031775-002/**N/A for PAM**
23	Shroud Fan	031767-001/**N/A for PAM**
24	Blade, Fan	024033/**N/A for PAM**
25	Bracket, Fan Motor	026989/**N/A for PAM**
26	Motor, Fan	803317/**N/A for PAM**
27	Condenser	031766-001/**N/A for PAM**
28	Drier, Refridgerant	031593-003/**N/A for PAM**
29	Frame, Back/Bottom	031747-001
30	Strut Support	031748-001
31	Angle, Cross Brace	031772-001
32	Hanger Bracket	031363-002
33	Shelf, Activation	031853-001
34	Push Button Assy., R/H	808965
	Push Button Assy., L/H	808997
35	Push Button, Front	080962
36	Body, Push Rivet	808966
37	Rivet, Push	808998
38	Screw Adjust	808966
39	Rod, Activation	031845-002
40	Bushing, Rod	808964
41	Valve Body	808290
42	Stem Assy.	031758-001
43	Wheel Arm, Valve	031765-001
44	Clip, U Type	808963
45	Tube Assy., Vavle to Bubbler	031739-002

REGULATOR ASSEMBLY

008284 - RIGHT HAND
008396 - LEFT HAND

PVC FOUNTAIN REGULATOR

804861

PVC FOUNTAIN REGULATOR LEFT HAND

804860

PUSH BUTTON ASSEMBLY

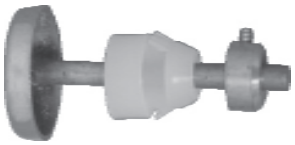

804174

VALVE STEM ASSEMBLY FOR BUBBLER REGULATOR

805045

PUSH BUTTON ASSEMBLY, BRIGHT

804011

804531 - BRASS BUBBLER HEAD

802066 - CHROME PLATED PVC BUBBLER HEAD

802066 - PUSH BUTTON ASSEMBLY

HALSEY TAYLOR UNIVERSAL GLASS FILLER KIT

*Bright polished stainless steel construction
*Glass filler with push down lever handle
*3/8” NPS supply
*100% Lead Free
*8-1/8” height, 3-1/8” overall width

KIT CONTAINS:
*Gooseneck glass filler and lever
*1/4 inch polytube
*1/4 inch tube connector
*1/4 inch tee tube connector
*Bubbler nipple
*Gasket

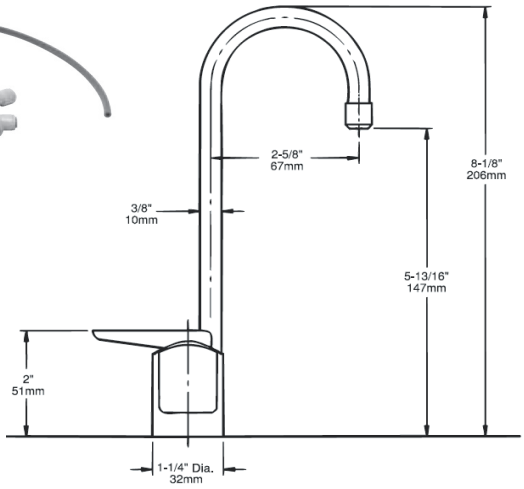

810207

HALSEY TAYLOR HACF8 SERIES

1	36208C	Power Cord
2	804628	Fan Blade
3	804629	Hex Nut - Fan Blade
4	31490C	Fan Motor
5	70009C	Screw - (Fan Motor)
6	56237C	Shroud - Fan
7	70682C	Tee 1/4”
8	70241C	Clip (Front & Rear Panels)
9	56159C	Nipple - Bubbler
10	802066	Bubbler - Chrome
	45396C	Bubbler - Aztec Gold
11	100322740560	Gasket - Bubbler (upper & lower)
12	66743C	Condenser
13	66703C	Drier
14	See Color Table	Panel-Right Rear (Refrig. Unit)
15	See Color Table	Panel-Right Rear (Left Unit)
16	See Color Table	Panel-Left Rear (Left Unit)
17	See Color Table	Panel-Left Rear (Refrig. Unit)
18	See Color Table	Panel-Front Lower
19	101516143550	Stud-Compressor Mtg.
20	100806740570	Grommet-Compressor Mtg.
21	19037000	Clip-Compressor Mtg.
22*	36094C	Compressor Serv. Pak EMI 70 HNR
23	35959C	Relay
24	35768C	Cover - Relay
25	809978	Overload
26	66576C	Heat Exchanger
27	40022C	Drain Tube Assembly
28	45485C	Drain Tube Assembly
29	410137	Drain Tube Assembly
30	56121C	Fitting - Elbow 1-1/4
31	75588C	Nut - Slip Joint 1-1/4
32	100147140560	Gasket - Drain
33	102639931640	Drain Plug - Chrome
	45413C	Drain Plug -Aztec Gold
34	160270508640	Stainer Plate -Chrome
	45400C	Strainer Plate - Aztec Gold
35	28152C	Basin - Stainless Steel
	27594C	Basin - Aztec Gold
36	75634C	Screw-Basin Mtg. Stainless Steel
	75605C	Screw-Basin Mtg. Aztec Gold
37	56092C	Tubing-Poly (Cut to Length)
38	31513C	Cold Control
39	807857	Evaporator Assembly
40	805178	Screw-#10 x 1/2” Lg. HHSM
41	802208	Strainer
42	See Color Table	Cover -Dispenser Bottom
43	22897C	Panel - Bottom Dispenser
44	51531C	Block-Pivot
45	000687	Nut -1/4, Self-Threading
46	See Color Table	Panel-Right Side
47	See Color Table	Panel-Left Side
48	See Color Table	Panel-Front Push
49	809163	Push Bar-Side & Front
50	809163	Insert-Push Bar, Gray
	55948C	Insert-Push Bar, Brown
51	800181	Bracket - Front Push
52	804832	Screw-#8 x 5/8” Lg. Torx/Slot
53	50212C	Rivet-Drive Type
54	51667C	Bumper-Press Bar
55	402207	Hex Nut
56	809371	Bracket-Regulator Mounting
57	809344	Retaining Nut
58	008022	Regulator
59	50986C	Holder-Regulator
60	70935C	Screw-Shoulder x 1/2” Lg.
61	805177	Screw-Regulator Brkt. Mtg.
62	22901C	Bracket-Side Push
NS	400660943730	Hanger Bracket
NS	75589C	Gasket

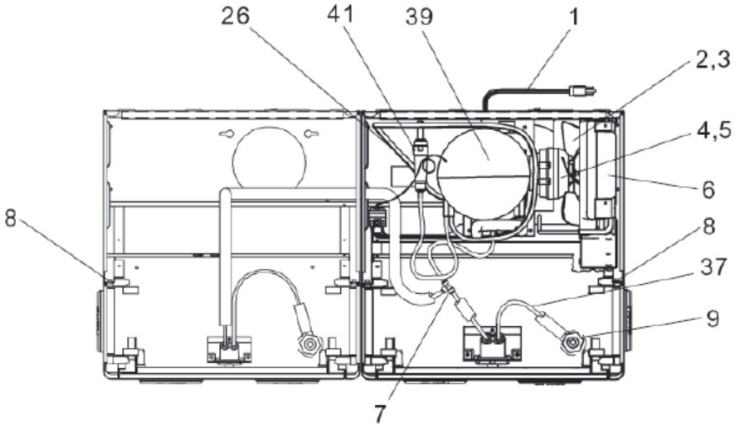

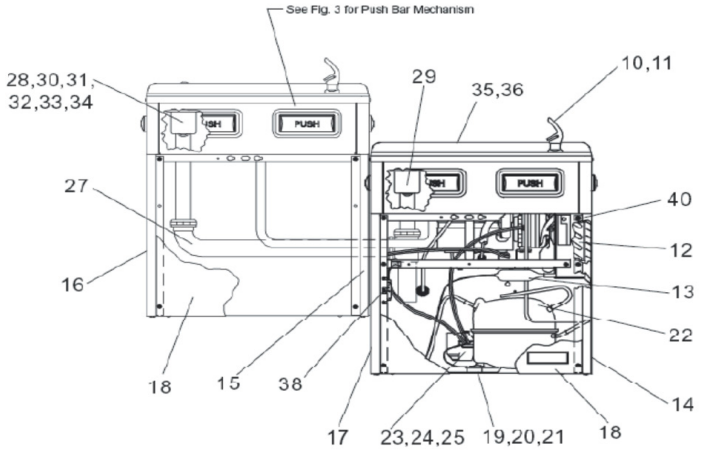

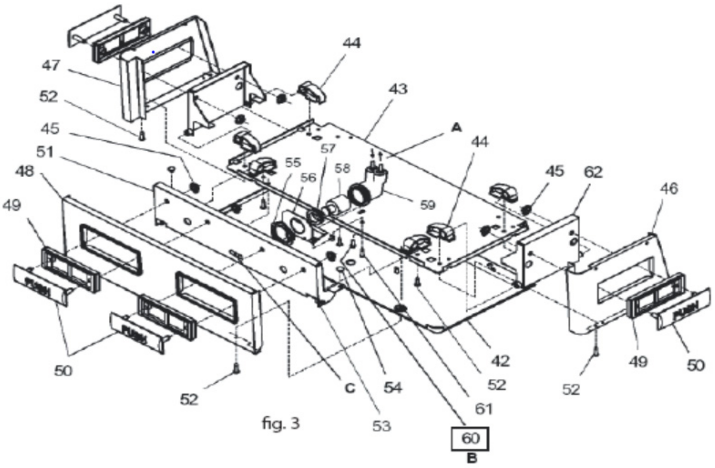

fig. 3

HALSEY TAYLOR PUSH BUTTON STEM ASSEMBLIES

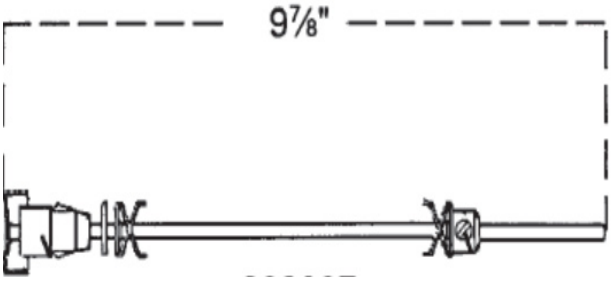

808007

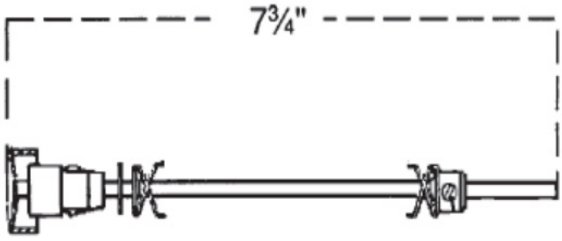

940001

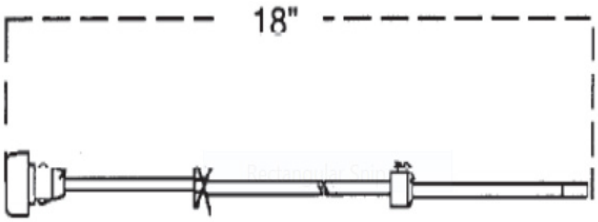

804174

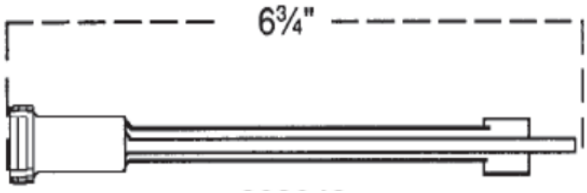

808048

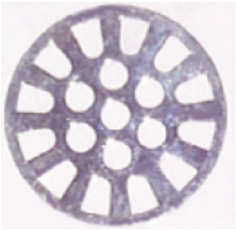

804012
FLAT CHROME PLATED BRASS STRAINER
FOR HALSEY TAYLOR DRINKING FOUNTAIN
1-7/8" O.D.
(NOT SHOWN TO SCALE)

HALSEY TAYLOR REPAIR PARTS

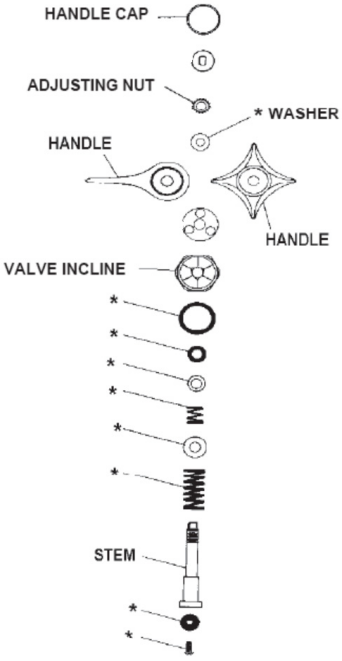

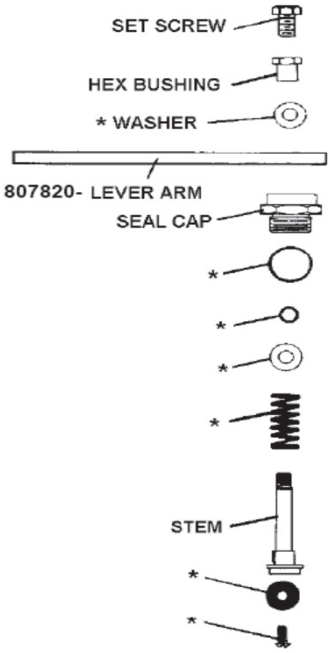

*808106 - STEM ASSEMBLY REPAIR KIT FOR SELF-CLOSING & LEVER ACTUATED VALVES
NOTE: REPAIR KIT WILL REPAIR EITHER VALVE SHOWN

PUSHROD REPAIR KIT

807668

PVC INLINE STRAINER SUNROC

003569 - FOR WATER COOLERS
1/4” COMP X 3/8” COMP X 2-1/8” LONG

BUBBLE HEAD WITH SOFT MOUTHGUARD

806757
(HARDWARE INCLUDED)

SUNROC NSW SERIES WATER COOLER PARTS

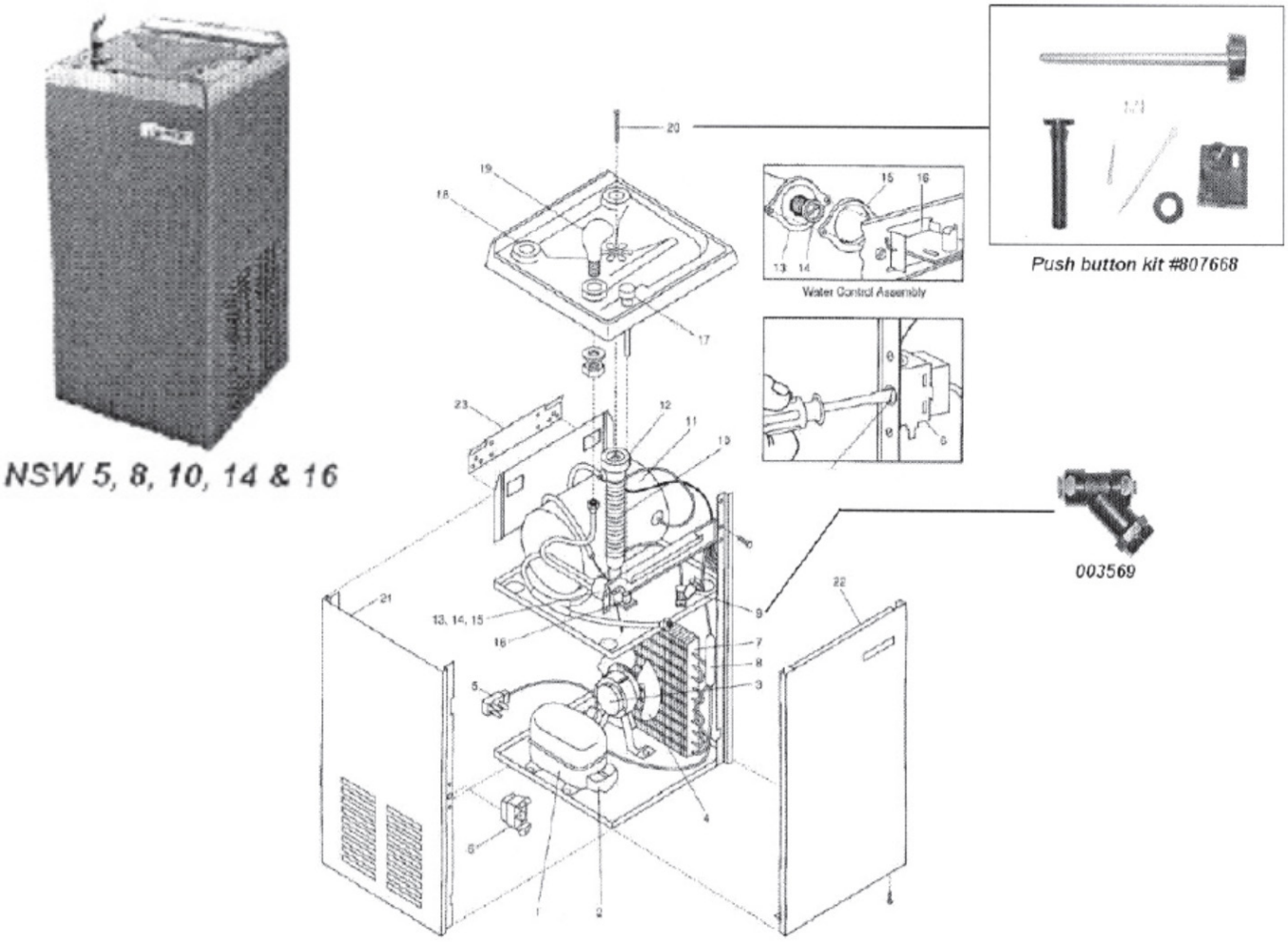

1. Compressor
   a. NSW-5 compressor (AA00007-SP)
   b. NSW-8 compressor (AA00007-SP)
   c. NSW-10 compressor (AA00006-SP) or (AA00028-SP-spade connections)
   d. NSW-14 compressor (AA00005-SP) or (AA00027-SP-spade connections)
   e. NSW-16 compressor (AA00008-SP) or (AA00029-SP-spade connections)
2. Overload (multiple options available call with model & serial number
3. Fan motor- all models (BB153475 eyelet type) or (803719 spade connections)
4. Fan blade - all models (C025756)
5. Wiring harness - all models (C026081 eyelet, C026392-01 16" wires assy. spade connections)
6. Cold thermostat- all models (008023 eyelet or C026376-03 spade)
7. Condenser
   a. Models NSW-5 & NSW-8 (C026102)
   b. Models NSW-10 to NSW-16 (C026101)
8. Drier-all models (AA00004)
9. "Y" Strainer-all models (003569)
10. Drain-all models (A018156-02)
11. Evaporator-all models (C026072-SP)
12. Drain washer - all models (808312)
13. Water control assembly/housing (600533)
14. Cartridge (808812)
15. Fiber washer (808913)
16. Collar (007895)
17. Push button only (808008) /Push button kit (807668)
18. Hole cover (400135)
19. Cobra metal bubbler spout (806757)
20. Drain screw (808311)
21. Side panel
    a. Pewter (D035802-19)
    b. Stainless steel (D035802-31)
22. Front panel
    a. Pewter (D035806-19)
    b. Stainless steel (D035806-31)
23. Hanger bracket (B154077)

MANSFIELD 500/300 MANSFIELD ANTI-SIPHON AND FROST-PROOF HYDRANTS

COMPONENTS AND PARTS LIST
(WHEN ORDERING, REFER TO PART NUMBER AND DESCRIPTION)

MANSFIELD 500 REPAIR KIT AND SERVICE PARTS KIT (ANTI-SIPHON)

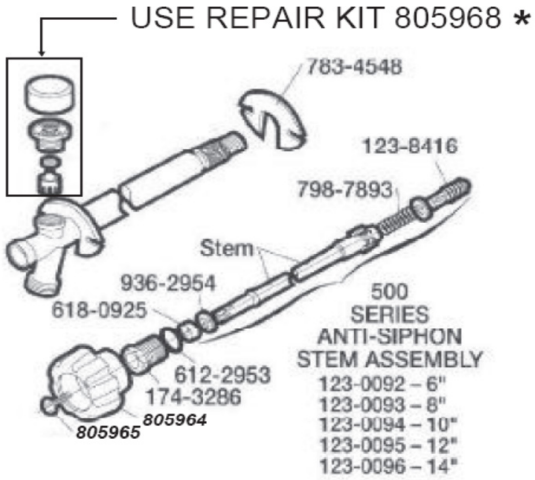

SERVICE PAK 805966

SERVICE PAK INCLUDES: Bonnet, Bonnet O-ring, Stem Packing, Brass Packing Washer, O-ring, Back flow washer, Bibb retainer, Seat washer, & Screw

MANSFIELD 300 REPAIR KIT AND SERVICE PARTS KIT (FROST PROOF)

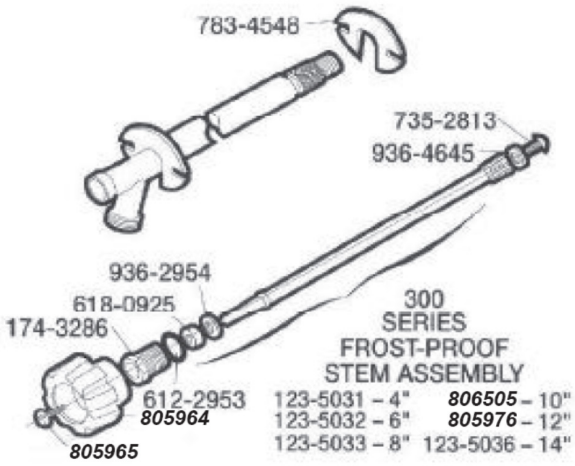

SERVICE PAK 805967

SERVICE PAK INCLUDES: Bonnet, Bonnet O-ring, Stem Packing, Brass Packing Washer, Seat washer, & Screw

SERVICE PAK 805968

FOR VACUUM BREAKER

SMITH QUARTERHORSE - 1/4 TURN NON-FREEZE WALL HYDRANTS

BRONZE BOX TYPE "TWIN-TEMP" FOR HOT AND COLD WATER

FUNCTION: Provides positive non-freeze protection where water is required at the outside of the building. Ideal for use in food handling areas, dairies and other places where both hot and cold water are desired. The recessed box conceals the hose connection and operating mechanisms. 1/4 turn of the key allows full flow to be obtained. The locking cover prevents unauthorized use.

5560QT

REGULARLY FURNISHED:
Bronze Quarter Turn Non-Freeze "Twin-Temp" Hydrant with Hose Connections, "T" Handle Key, and Bronze Box with Chrome Plated Face, and Inlet Size Furnished as Indicated by Figure Number Selected.

VARIATIONS:
Adjustable Wall Clamp -WC
Cylinder Lock -CL
1" Hose Connection -HC1
3/4" Vacuum Breaker -H
Mild Climate -SAP
Optional Inlet Connections (See Pg. 5-06)
"Water" Cast On Cover -W

OPTIONAL MATERIALS:
Nickel Bronze Box -NB
Polished Bronze Hydrant -PB
Rough Bronze Box -RB

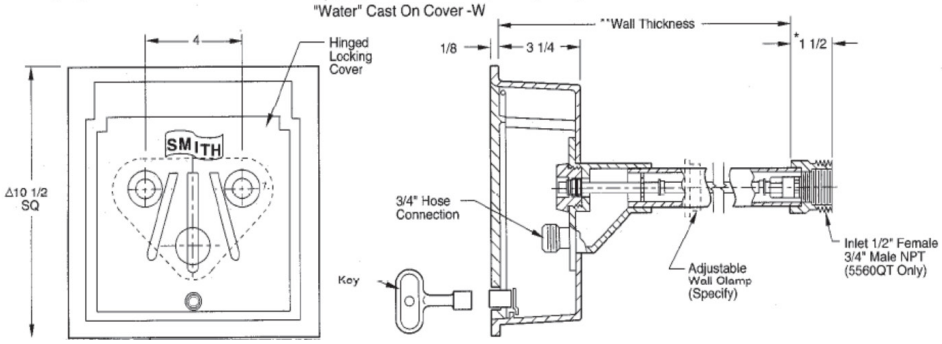

2 REPAIR KITS REQUIRED PER UNIT	BEFORE JAN. '79 USE KIT NO. **900042**	AFTER FEB. '79 USE KIT NO. **900040**	1996 & LATER USE KIT NO. **000683**

INTEGRAL VACUUM BREAKER AND EXPOSED HOSE CONNECTION

FUNCTION: For installation in interior or exterior building walls where an exposed hose connection is acceptable. Provides positive non-freeze protection and features an integral vacuum breaker. Adaptable to all types of wall construction. 1/4 turn of the key allows full flow to be obtained.

5609QT

REGULARLY FURNISHED:
Bronze Nickel Plated Quarter Turn Non-Freeze Hydrant with 3/4" Hose Connection, Integral Vacuum Breaker with Vandal Resistant Cap and "T" Handle Key. This Hydrant meets ANSI A112.21.3 Specifications.

VARIATIONS:
Adjustable Wall Clamp - WC
1" Hose Connection -HC1
**1" Male NPT Inlet Connection -IC1
Mild Climate -SAP
Optional Inlet Connections (See Pg. 5-06)
Wheel Handle -WH

OPTIONAL MATERIALS:
Polished Bronze -PB

OPERATING RODS ARE:
941155 - 6" ROD
941156 - 8" ROD
941157 - 12" ROD

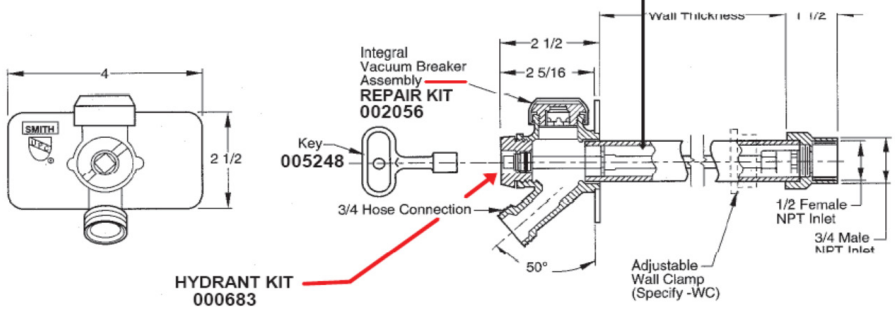

J.R. SMITH HYDRANT KITS

REPAIR KIT - **900043**
AFTER AUG. 1984
FOR OLD STYLE 5509 SERIES

NO KITS AVAILABLE FOR MODELS PRIOR TO AUGUST 1984

REPAIR KIT - **000683**
FOR NEW QUARTER TURN VALVES

5509QT

ALSO USED ON MODELS 5560QT & 5609QT

REPAIR KIT - **901453**
AFTER JAN. 1979

5810F
5811F

ALSO USED ON MODELS
5910, 5950, 5810, & 5811

REPAIR KIT - **900040**
AFTER JAN. 1979

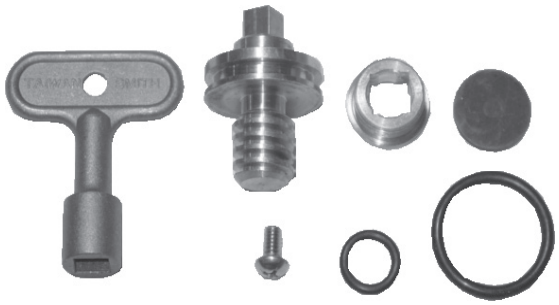

FOR MODELS 5510, 5511, 5560, & 5611

REPAIR KIT - **900042**
BEFORE JAN. 1979

FOR MODELS
5510, 5511, 5560, 5610, & 5611

REPAIR KIT - **900044**
BEFORE JAN. 1979

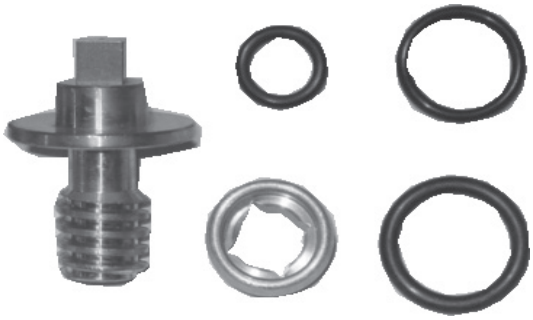

FOR MODEL 5609

VACUUM BREAKER REPAIR KIT

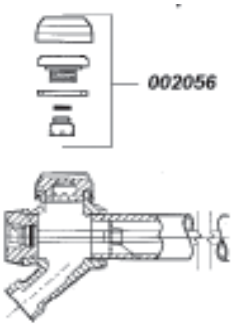

JOSAM HYDRANT KITS

HYDRASAN I
CONSEALED TYPES
71000 SERIES NON-FREEZE
71020 SERIES MILD CLIMATE

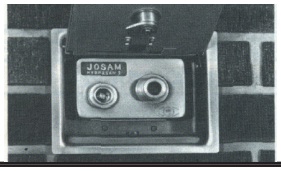

HYDRASAN I
EXPOSED TYPES
71050 SERIES NON-FREEZE
71070 SERIES MILD CLIMATE

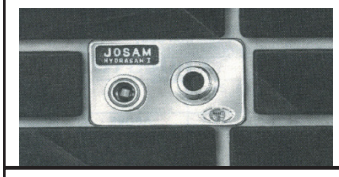

VACUUM BREAKER
REPAIR KIT - **804367**
FOR HYDRASAN I OR II

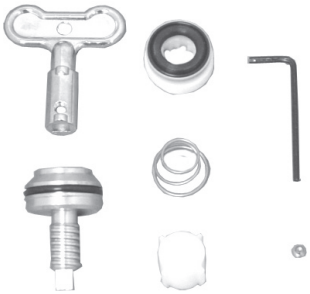

REPAIR KIT - **804376**
FOR NON-FREEZE
HYDRASAN I OR II

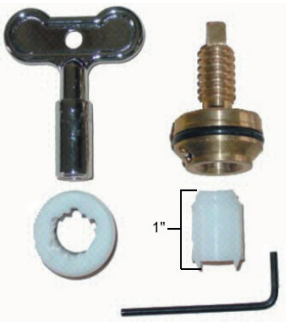

REPAIR KIT - **804378**
FOR MILD CLIMATE
HYDRASAN I OR II

801284 - (O-RING ONLY FOR ABOVE KITS

REPAIR KIT - **804377**

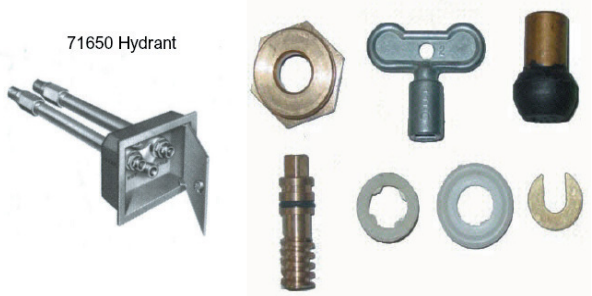

ALSO USED ON MODELS 1500 & 71550

HYDRANT REPAIR KIT - **804375**

FOR MODELS 1420N & 71950

HYDRANT REPAIR KIT - 804370**901453**
AFTER JAN. 1979

FOR 1400N, 1410N, 71550, & 71650 OLD STYLE

GENUINE WOODFORD PARTS - REPAIR KITS
RESIDENTIAL FAUCETS

RK-14 MODEL 14/18 REPAIR KIT
404556

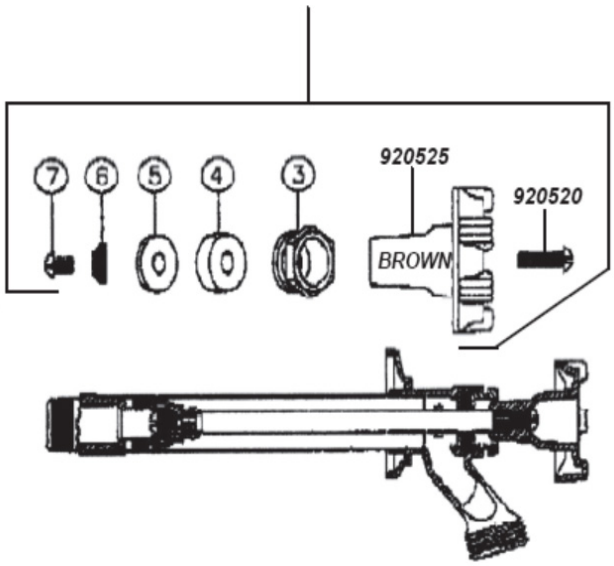

RK-17 MODEL 17 REPAIR KIT
404557

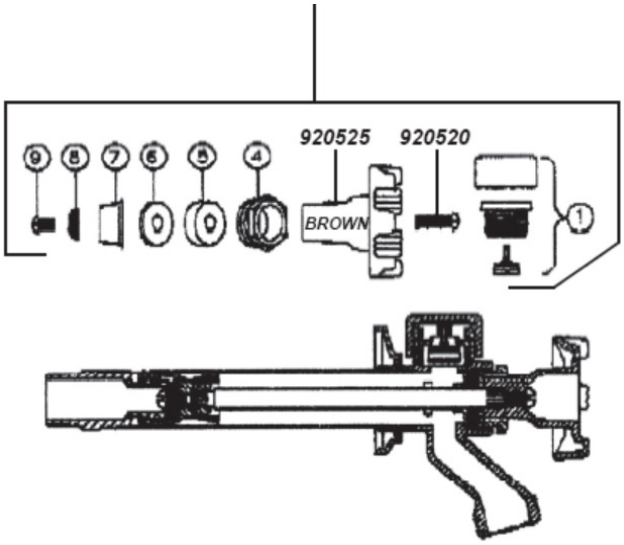

MODEL 21/24/B24/26/B26/Y24/Y28
BRASS REPAIR KIT

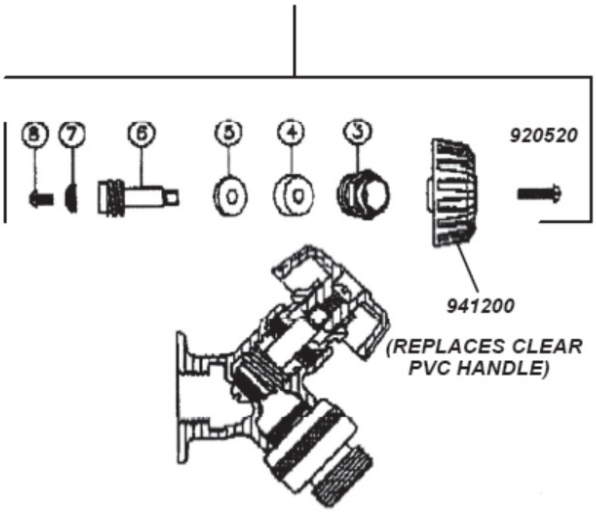

RK-25 MODEL 25 REPAIR KIT
401030

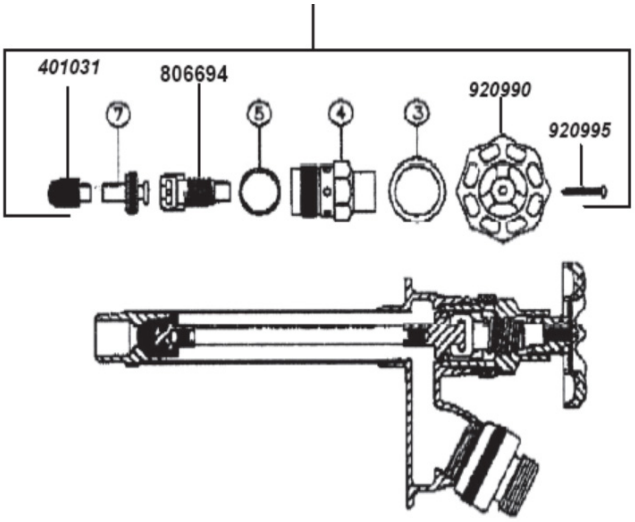

WOODFORD MODEL 14 HYDRANT STEMS

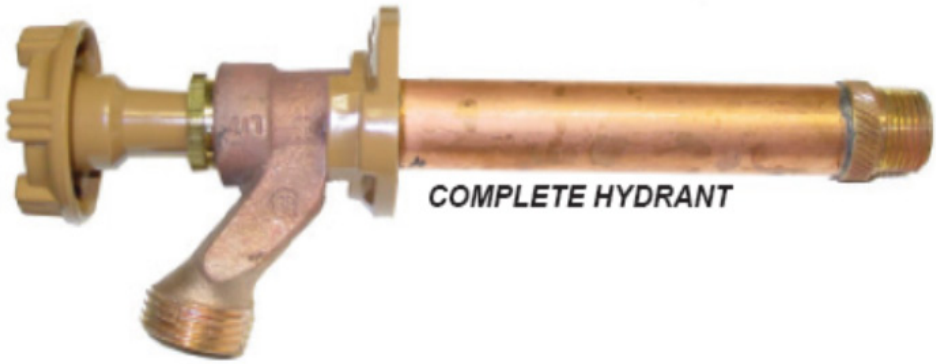

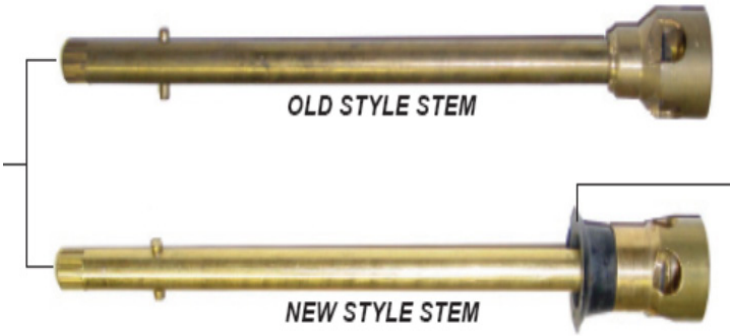

THESE STEMS ARE INTERCHANGEABLE

920521 - BLACK RUBBER CHECK VALVE

REPLACEMENT STEMS

920985 - STEM/ROD IS 5-7/8" LONG, FOR 4" WALL FAUCET
920550 - STEM/ROD IS 7-7/8" LONG, FOR 6" WALL FAUCET
920555 - STEM/ROD IS 9-7/8" LONG, FOR 8" WALL FAUCET
920560 - STEM/ROD IS 11-7/8" LONG, FOR 10" WALL FAUCET
920565 - STEM/ROD IS 13-7/8" LONG, FOR 12" WALL FAUCET

WOODFORD MODEL 25 HYDRANT COMPONENTS

940904 - COMPLETE STEM AND HANDLE KIT FOR 4" WALL HYDRANT.
UNIT IS 8" LONG IN THE OPEN POSITION
940900 - COMPLETE STEM AND HANDLE KIT FOR 8" WALL HYDRANT.
UNIT IS 12" LONG IN THE OPEN POSITION

WOODFORD COMMERCIAL HYDRANTS

RK-65 MODEL 65 CHROME REPAIR KIT
940562

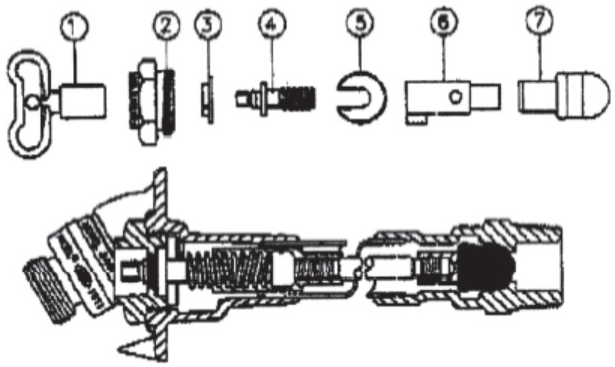

*RK-70 MODEL 70/80 REPAIR KIT
405770

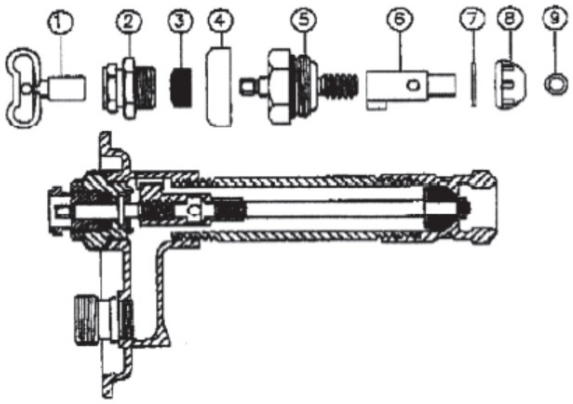

***ALSO REPAIRS MODEL 80**

RK-71 MODEL 71/81/B71, 74/84/B74
CHROME REPAIR KIT
404559

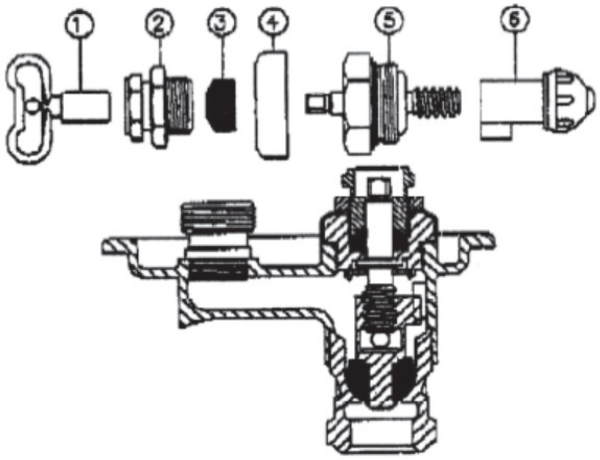

RK-75 MODEL 75, B75, 79, B79
CHROME REPAIR KIT
404560

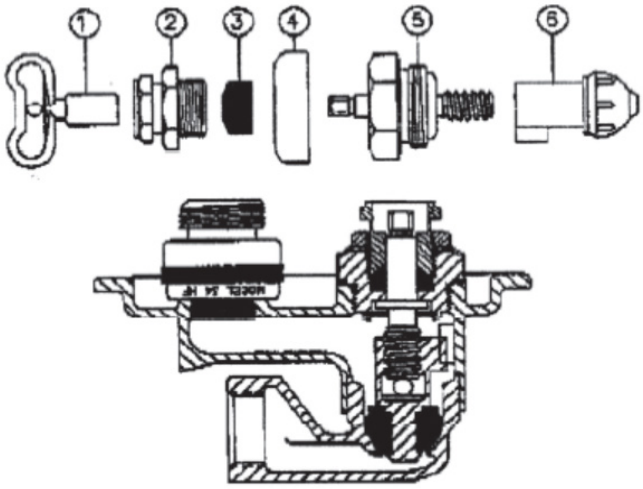

ZURN HYDRANT REPAIR KITS

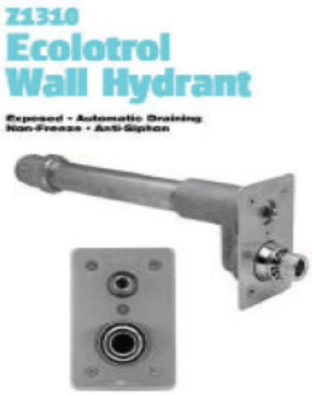

HYDRANT REPAIR KIT
ITEM - **#804085**

*For hydrant models Z1300 & Z1310

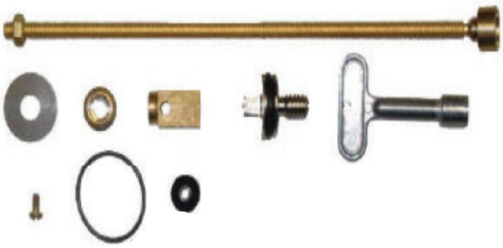

COMPLETE REPAIR KIT WITH
UNIVERSAL STEM UNIT
*FOR HYDRANT MODELS Z1300 &Z1310
(ROD SHOWN IS 12-1/2" LONG - CUT TO LENGTH)
#806611

Z1315 WALL
HYDRANT

ZURN HYDRANT
REPAIR KIT

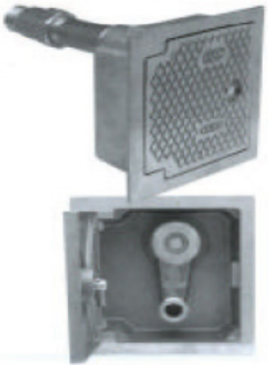

ITEM **#003850**
FOR HYDRANT MODELS
Z1305, Z1315, & Z1325

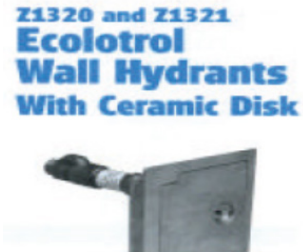

HYDRANT REPAIR KIT

ITEM **#920380**
FOR HYDRANT MODELS
Z1320, & Z1321

12

ZURN

CERAMIC CARTRIDGE ASSEMBLIES

L	LIST OF MATERIAL						
	ITEM	QUAN.	PART NO.	NAME	MATERIAL	MAT. SPEC.	DESCRIPTION
3	1	1	61402-001	CARTRIDGE ASSY.	N/A	N/A	Z1330, Z1332-EZ, Z1333
6 1/8	4	1	" -004	"	"	"	4" WALL
7 1/8	5	1	" -005	"	"	"	5" WALL
8 1/8	6	1	" -006	"	"	"	6" WALL
9 1/8	7	1	" -007	"	"	"	7" WALL
10 1/8	8	1	" -008	"	"	"	8" WALL
11 1/8	9	1	" -009	"	"	"	9" WALL
12 1/8	10	1	" -010	"	"	"	10" WALL
13 1/8	11	1	" -011	"	"	"	11" WALL
14 1/8	12	1	" -012	"	"	"	12" WALL
15 1/8	13	1	" -013	"	"	"	13" WALL
16 1/8	14	1	" -014	"	"	"	14" WALL
17 1/8	15	1	" -015	"	"	"	15" WALL
18 1/8	16	1	" -016	"	"	"	16" WALL
19 1/8	17	1	" -017	"	"	"	17" WALL
20 1/8	18	1	" -018	"	"	"	18" WALL
21 1/8	19	1	" -019	"	"	"	19" WALL
22 1/8	20	1	" -020	"	"	"	20" WALL
23 1/8	21	1	" -021	"	"	"	21" WALL
24 1/8	22	1	" -022	"	"	"	22" WALL
25 1/8	23	1	" -023	"	"	"	23" WALL
26 1/8	24	1	" -024	"	"	"	24" WALL
27 1/8	25	1	" -025	"	"	"	25" WALL
28 1/8	26	1	" -026	"	"	"	26" WALL
29 1/8	27	1	" -027	"	"	"	27" WALL
30 1/8	28	1	" -028	"	"	"	28" WALL
31 1/8	29	1	" -029	"	"	"	29" WALL
32 1/8	30	1	" -030	"	"	"	30" WALL
33 1/8	31	1	" -031	"	"	"	31" WALL
34 1/8	32	1	" -032	"	"	"	32" WALL
35 1/8	33	1	" -033	"	"	"	33" WALL
36 1/8	34	1	" -034	"	"	"	34" WALL
37 1/8	35	1	" -035	"	"	"	35" WALL
38 1/8	36	1	" -036	"	"	"	36" WALL
39 1/8	37	1	" -037	"	"	"	37" WALL
40 1/8	38	1	" -038	"	"	"	38" WALL

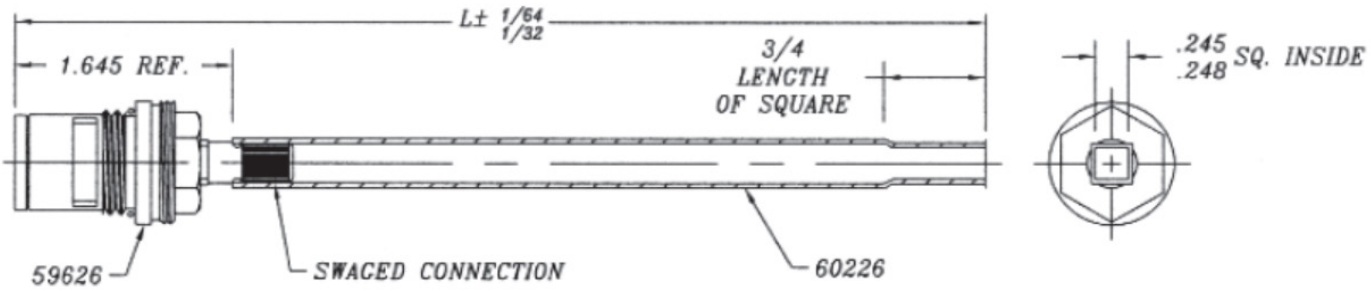

SILLCOCK THREADED ECONOMY, BRONZE FINISH, CAST BRASS

400575- 1/2”-FIP
400690- 3/4”-FIP

BOILER DRAIN W/ STUFFING BOX BRONZE FINISH, 3/4” HOSE THREAD OUTLET, CAST BRASS, ECONOMY

400570- 1/2”-MIP (ALSO FITS 1/2” SWT I.D.)
401673- 3/4”-MIP

(SPOUT SLIGHTLY ANGLED)

B & K BOILER DRAIN W/ STUFFING BOX, 3/4” HOSE THREAD OUTLET, CAST BRASS

406963- 1/2”-FIP
408251- 3/4”-FIP

BOILER DRAIN W/ STUFFING BOX, 3/4” HOSE THREAD OUTLET, CAST BRASS, ECONOMY

400650- 1/2”-MIP
400655- 3/4”-MIP

(STRAIGHT SPOUT)

HEAVY PATTERN HOSE BIBB THREADED MALE IPS X HOSE END, ENCONOMY

408005- 1/2”-MALE
408006- 3/4”-MALE

WASHING MACHINE HOSES (3/4 X 3/4) HIGH PRESSURE, 800 LB/SQ IN. BURST PRESSURE, 5 FT. LONG, SOLD EACH

401075- RUBBER
409872- STAINLESS NO-BURST

WASHER OUTLET BOX

942587

TWO 1/2” SWEAT OR 1/2” MIP X MALE HOSE VALVES

B & K BOILER DRAIN W/ STUFFING BOX, 3/4” HOSE THREAD OUTLET, CAST BRASS

406963- 1/2”-FIP
408251- 3/4”-FIP

HYDRANT/GATE VALVE HANDLE

406614- 3/8” SQAURE BROACH, 3-3/4” DIAMETER, WITH SET SCREW

HYDRANT HANDLE

801856- 2-3/16” WHEEL HANDLE, 5/16” SQUARE BROACH
801857- 2” OD WHEEL HANDLE, W/12 POINT BROACH FOR 3/8” OD STEM
900125- SAME AS 801857 BUT WITH 1/4” SQUARE BROACH

WALL HYDRANT W/VACUUM BREAKER ROUGH CHROME W/ LOOSE KEY CONVERSION PARTS KIT (LOCK SHIELD & HYDRANT KEY)

941050- 1/2”-FIP
941051- 3/4”-FIP

WOODFORD FROST PROOF SILLCOCK

*PERMANENT STAINLESS STEEL SEAT *ADJUSTABLE FLANGE
*ADJUSTABLE PACKING NUT WITH TEFLON IMPREGNATED PACKING
**2”2” MODERN HANDLE DESIGN 1/2 MIP OR 1/2 SWEAT OUTLET
***3/4” MALE HOSE THREAD OUTLET *NO LEAD SOLDER JOINTS

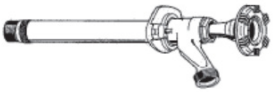

900015 - 4”
900005 - 6”
900010 - 8”
900014 - 12”
900007 - 14”
SIZES INDICATES WALL THICKNESS

WOODFORD ANTI-SIPHON FROST PROOF SILLCOCK

*PERMANENT STAINLESS STEEL SEAT ADJUSTABLE FLANGE
*ADJUSTABLE PACKING NUT WITH TEFLON IMPREGNATED PACKING
*MODERN HANDLE DESIGN *1/2”MIP OR 1/2” SWEAT OUTLET
*3/4” MALE HOSE THREAD OUTLET *NO LEAD SOLDER JOINTS

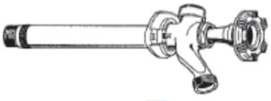

900200 - 4”
900201 - 6”
900202 - 8”
900203 - 12”
900204 - 14”
SIZES INDICATES WALL THICKNESS